Thermal (T- and TA-Line)
www.schurter.com/PG17_18_19

T13-212

Circuit Breaker for Equipment thermal, Threaded neck type, Reset type, Screw terminals



Description
- Threaded neck type
- Thermal circuit breaker
- 1-pole
- Reset type
- Positively trip-free release
- Wide current range
- High breaking capacity
- Bolts and nuts

Standards
- IEC 60934
- UL 1077
- CSA C22.2 235
- GB 17701

Applications
- Power supplies
- Uninterruptible power supply
- Power tools
- Household appliances

Weblinks
pdf-datasheet, html-datasheet, General Product Information, Approvals, CE declaration of conformity, RoHS, CHINA-RoHS, REACH, e-Shop, SCHURTER-Stock-Check, Distributor-Stock-Check, Detailed request for product, Product News

Technical Data

Rated Voltage AC	240/277 V; 50/60 Hz, see approbations
Rated Voltage DC	28 V
Rated current range AC	0.05 - 30 A
Conditional short circuit capacity	IEC: Inc, PC1, AC 240V: 1 kA
Short circuit capacity Icn	at In < 7 A/240 VAC : 8 x In
	at In ≥ 7 A/240 VAC : 400 A
	AC/DC 28 V : 400 A
Degree of Protection	from front side IP 40 acc. to IEC 60529
Dielectric Strength	50 Hz: 1.5 kV Impulse 1.2/50 µs: > 2.5 kV
Insulation resistance	500 VDC > 100 MΩ
Endurance typical	2 x Ir: 3000 switching cycles
Endurance minimum	Reset type AC : 2 x Ir , cos φ 0.6 : DC : 2 x Ir , L/R = 2 - 3 ms : 50 switching cycles

Overload	IEC: min. 40 trips @ 6 x Ir, cos φ 0.6
	UL / CSA: min. 50 trips @ 1.5 x Ir, cos φ 0.75
Ambient temperature	-5 °C to 60 °C
Vibration Resistance	± 1.5 mm @ 10 - 60 Hz acc. to IEC 60068-2-6, test Fc 10 G @ 60 - 500 Hz acc. to IEC 60068-2-6, test Fc
Shock Resistance	100 G / 6 ms acc. to IEC 60068-2-27, test Ea
Tripping Type	Thermal
Actuation type	Reset type
Weight	ca. 10 g

HAMER | 27 Dalziel Place, Woolston, Christchurch | 0800 239 239 | www.hamer.co.nz

T13-212

Dimension
T13-212

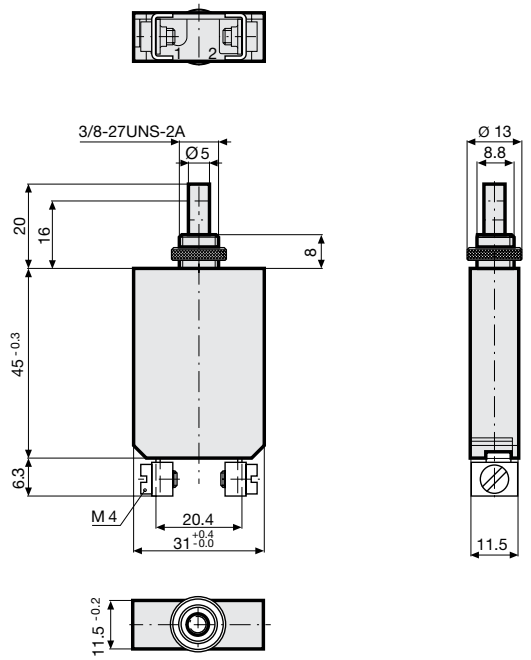

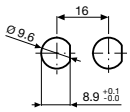

Diagrams
T13-...

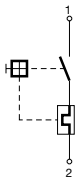

HAMER | 27 Dalziel Place, Woolston, Christchurch | 0800 239 239 | www.hamer.co.nz

Approvals

Approval		Rated current	Rated voltage AC	Rated voltage DC
	UL 1077	0.05...30 A	277 V	28 V
	CSA C22.2 No. 235	0.05...30 A	277 V	28 V
	EN 60934	0.05...30 A	240 V	-
	GB 17701	0.05...30 A	240 V	-

Typical internal resistance

Rated Current [A]	Internal Resistance [Ω]
0.05	376.500
0.50	4.40
1.00	1.10
2.00	0.31
3.00	0.14
4.00	0.068
5.00	0.048
6.00	0.033
8.00	0.026
9.00	0.0125
10.00	0.0125
11.00	0.0085
12.00	0.0085
13.00	0.0085
14.00	0.007
15.00	0.007
16.00	0.007
17.00	0.0047
18.00	0.0047
19.00	0.0047
20.00	0.004
21.00	0.0035
22.00	0.003
23.00	0.003
24.00	0.003
25.00	0.003
26.00	0.0022
27.00	0.002
28.00	0.002
29.00	0.002
30.00	0.002

Time-Current-Curves

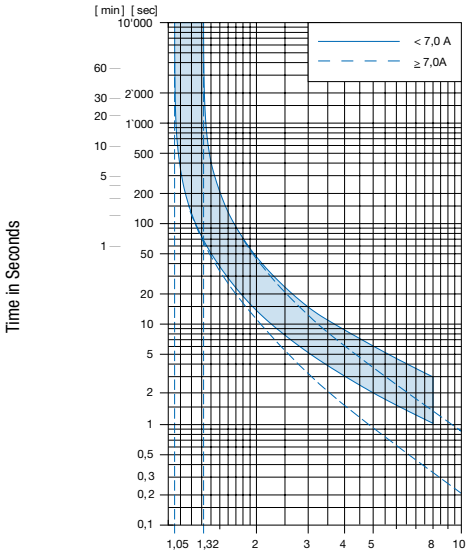

Reference Temperature +23°

Effect of ambient temperature

The units are calibrated for an ambient temperature of +23°C. To determine the rated current for a lower or higher ambient temperature, use a correction factor (typical value) from the table below:

Ambient temperature [°C]	Correction factor
-5	0.88
0	0.90
10	0.95
23	1.00
30	1.05
40	1.10
50	1.18
60	1.26

Example: Rated current = 5 A; Environmental temperature = 40 °C; --> Correction factor = 1.1; Resulting current = 5.5 A --> Fount to next higher rated current: 6 A

Config. Code

T13 - 1 2 3 B - 1.23

The characters are placeholders for the correspondingly keys of selections from the key tables.

T13 - **1** 2 3 B - 1.23 = Mounting

Mounting	Configuration key
Threaded neck type with knurled nut	2

T13 - 1 2 **3** B - 1.23 = Terminal

Terminal	Configuration key
Screw clamp terminals	2

T13 - 1 **2** 3 B - 1.23 = Actuation type

Actuation type	Configuration key
Reset type	1

T13 - 1 2 3 **B** - 1.23 = Setting indication

Setting indication	Configuration key
Setting indication	R

T13 - 1 2 3 B - **1.23** = **Rated current**

Rated current	Configuration key
0.05 A	0.05
0.1 A	0.1
0.15 A	0.15
0.2 A	0.2
0.3 A	0.3
0.4 A	0.4
0.5 A	0.5
0.6 A	0.6
0.7 A	0.7
0.8 A	0.8
0.9 A	0.9
1.0	1
1.1 A	1.1
1.2 A	1.2
1.3 A	1.3
1.4 A	1.4
1.5 A	1.5
1.6 A	1.6
1.7 A	1.7
1.8 A	1.8
1.9 A	1.9
2.0 A	2
2.1 A	2.1
2.3 A	2.3
2.5 A	2.5
2.8 A	2.8
3.0 A	3
3.3 A	3.3
3.5 A	3.5
4.0 A	4
4.5 A	4.5
5.0 A	5
5.5 A	5.5
6.0	6
6.5 A	6.5
7.0 A	7
7.5 A	7.5
8.0 A	8
8.5 A	8.5
9.0 A	9
9.5 A	9.5
10.0 A	10
11.0 A	11
12.0 A	12
13.0 A	13
14.0 A	14
15.0 A	15
16.0 A	16
17.0 A	17
18.0 A	18
19.0 A	19
20.0 A	20
22.0 A	22
25.0 A	25
28.0 A	28
30.0 A	30

Other rated currents on request

Other rated currents on request

Variants

Rated current	Setting indication	Config. Code	Order Number
16.0 A		T13-212-16	4411.0012
30.0 A		T13-212-30	4411.0067
12.0 A		T13-212-12	4411.0099
11.0 A	●	T13-212R-11	4411.0210
15.0 A	●	T13-212R-15	4411.0211

Availability for all products can be searched real-time:http://www.schurter.com/en/Stock-Check/Stock-Check-SCHURTER

Packaging Unit 1 Pcs

Accessories

	Description
	T-Linie Zubehör Accessories to T-Line

The specifications, descriptions and illustrations indicated in this document are based on current information. All content is subject to modifications and amendments. Information furnished is believed to be accurate and reliable. However, users should independently evaluate the suitability and test each product selected for their own applications.