CATALOGUE

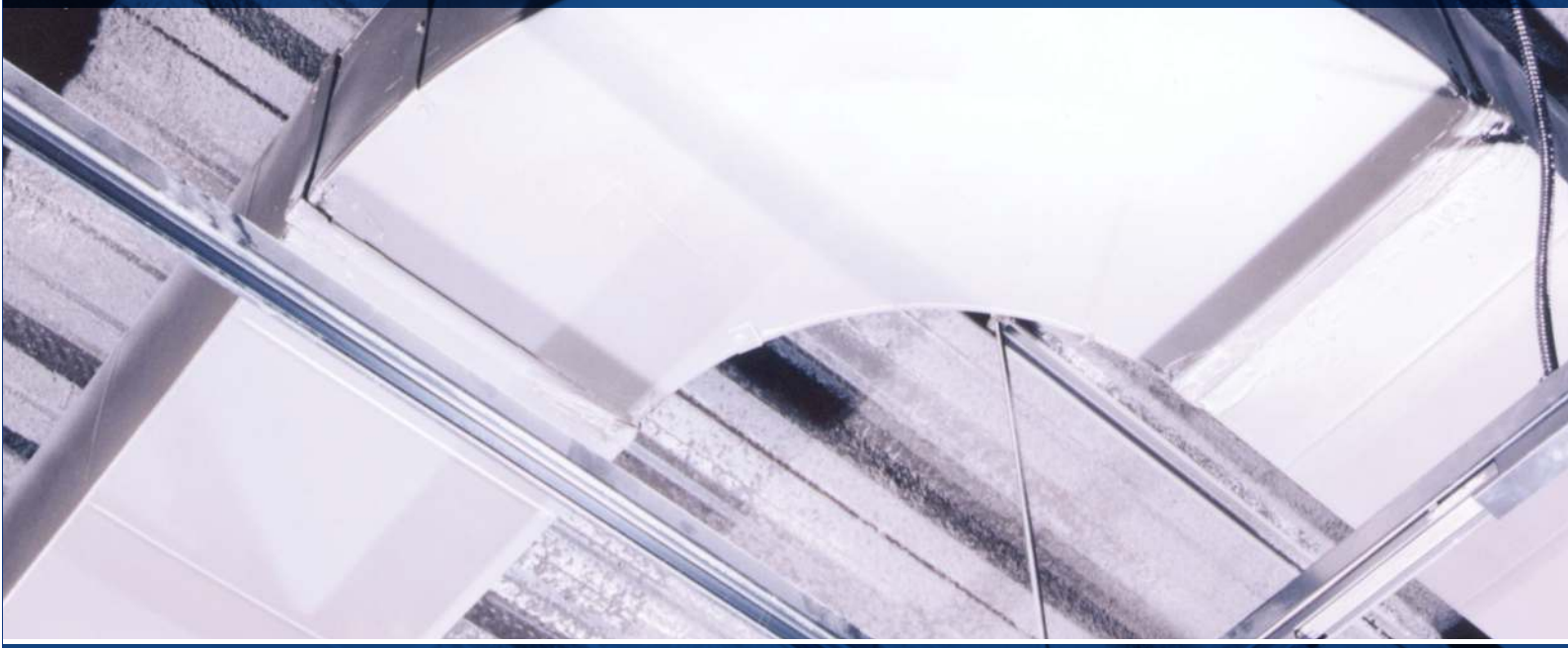

ELECTRICAL & MECHANICAL SUPPORT SYSTEMS

Metal Framing • Pipe Supports • Fittings, Nuts & Hardware • Cable Trays and Cable Ladders

UNISTRUT®

A PART OF atkore INTERNATIONAL

UNISTRUT®

NEMA CABLE LADDER - GENERAL INFORMATION

Unistrut® also manufactures and markets the largest range of cable ladder systems for the Australasian Electrical Industry. This extensive range of cable ladder support systems includes a comprehensive range of steel and aluminium cable ladders load rated to NEMA Standard VE1. Steel cable ladders can be manufactured to side-rail in or side-rail out configuration depending on the project requirements.

In cases where extremely high corrosion resistance is required, stainless steel cable ladder systems are available by special order. All Unistrut® Cable Ladder systems are complemented with a complete range of accessories: Horizontal Bends, Internal and External Risers, Tees, Crosses, Reducers, Hinged Horizontal and Vertical Splices, Adjustable Risers, Covers, Divider Strip, Adjustable Cantilever Support Brackets and Cable Clamps.

NEMA AL8 CABLE LADDER

Length: 6m
Width: 150, 300, 450, 600, 750, 900mm
Cable Laying Depth: 30mm

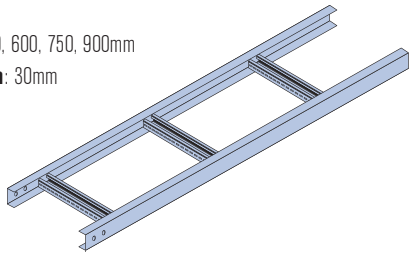

NEMA AL12 CABLE LADDER

Length: 6m
Width: 150, 300, 450, 600, 750, 900mm
Cable Laying Depth: 70mm

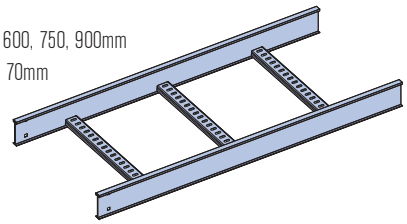

NEMA AL12B CABLE LADDER

Length: 6m
Width: 150, 300, 450, 600, 750, 900mm
Cable Laying Depth: 88mm

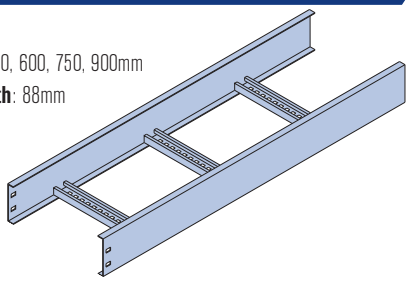

NEMA AL16 CABLE LADDER

Length: 6m
Width: 150, 300, 450, 600, 750, 900mm
Cable Laying Depth: 80mm

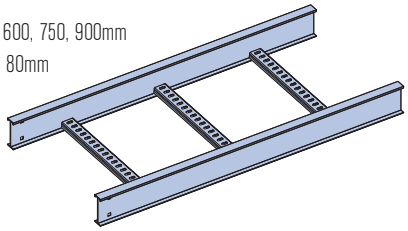

NEMA AL20 CABLE LADDER

Length: 6m
Width: 150, 300, 450, 600, 750, 900mm
Cable Laying Depth: 100mm

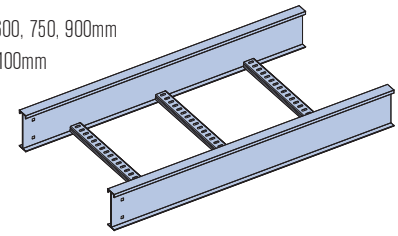

NEMA AL20C CABLE LADDER

Length: 6m
Width: 150, 300, 450, 600, 750, 900mm
Cable Laying Depth: 125mm

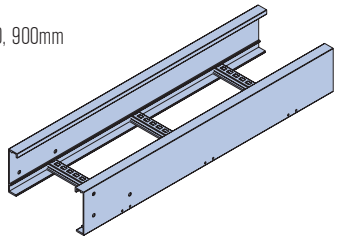

NEMA 16A CABLE LADDER - STEEL

Length 6m
Width: 150, 300, 450, 600mm
Cable Laying Depth: 72mm

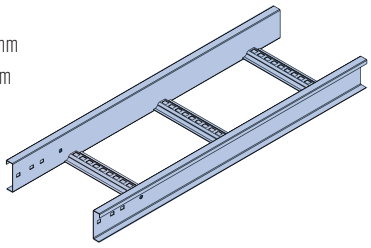

NEMA 20B CABLE LADDER - STEEL

Length: 6m
Width: 150, 300, 450, 600mm
Cable Laying Depth: 109mm

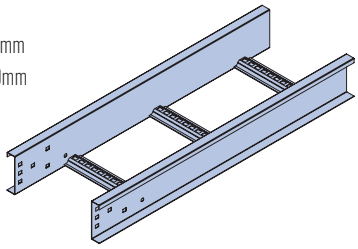

UNISTRUT®

NEMA CABLE LADDER - GENERAL INFORMATION

The following notes are presented in order to assist users to achieve maximum economy and convenience with the installation of cable support systems. As each application will have its own particular conditions and requirements, it is recommended that the services of Unistrut® sales personnel and engineering team be engaged, especially in the early stages of any major project, so that the best overall result can be achieved.

STANDARD SIZES

Standard ladder widths are 150mm, 300mm, 450mm, 600mm, 750mm and 900mm being the inside dimension between side-rails and is the maximum width available for carrying cables. Straight lengths are 6m long. Standard rung spacing on all systems is 300mm nominal.

Each of the Unistrut® systems includes a full range of standard accessories, with a nominal radius of 300mm. Non-standard ladder widths and accessory radii can be manufactured by special order. Non-standard products are non-returnable and non-refundable.

LOAD CAPACITY

a) **Cable Load** – Because the cable density remains fairly constant in a total installation, the widest ladders carry the most load, and each smaller width carries proportionately less load. However, the load carrying capacity of any class of ladder is independent of the width.

   For details on how safe working loads are determined, refer to the NEMA VE 1 Standard and to the published load graphs for allowable loads of each ladder type.

b) **Fixed Ladder Spans** – It is commonly found that the building structure supporting the cable ladders will dictate the span, but it is still possible to exercise some choice. Where the cabling is heaviest, and this is not usually extensive, it is possible to use two 300mm wide ladders side by side instead of one 600mm wide, in order to select a lighter category of ladder for the total project. It is often inconvenient to use more than one ladder category in the same installation.

c) **Varying the Spans** – Where the structure does not dictate the ladder span, the heaviest cable runs could be supported more frequently, again enabling a lighter category of ladder to be chosen.

CABLE LAYING DEPTH

Each of the Unistrut® Cable Ladder has a different cable laying depth. It is a general rule that the shallower the ladder, the lower the cost per metre and the more frequently it needs support. It is sometimes found that the lightest, most economical ladders are excluded from consideration solely because a particular minimum cable laying depth is required and has been specified accordingly.

DEFLECTION

Cable ladders are essentially structural members designed to strength requirements only and are required to support pliable load elements. Therefore, the control of deflection is not necessary for durability or stability reasons and can probably only be justified on purely aesthetic grounds. If normally accepted deflection limits such as 1/360th of span are imposed, the resultant cable ladder will be grossly overdesigned and correspondingly expensive.

There may still be locations where the designer wishes to limit visual deflection. For example, prestige areas which may be open to public view or where the ladder is installed at eye level and deflection is accentuated. If these conditions exist, it is recommended that closer support spacings be used only in those important locations (to control visual deflection) and normal support spacings elsewhere (for economy). A maximum of 1/180th of span, when deflection is determined from the graphs published in this catalogue, should prove a satisfactory limit for visual deflection.

Otherwise, wherever overall economy is the principal consideration, no limits should be placed on deflection. This does not mean that deflection will be excessive but simply that a typically acceptable installation will result and optimum economy will be attained.

NEMA CABLE LADDER - GENERAL INFORMATION

MATERIAL SELECTION

Often the most difficult decision to be made is the selection of material, because it involves the most cost-sensitive of compromises. Material choice is directly related to service life and the longer the required life, the more expensive will be the materials. The cost of these materials also must be considered as an equation of initial investment versus maintenance costs and eventual replacement.

Because service conditions for cable ladders can vary over an enormously wide range, even within a single installation, it is impossible to write down any hard and fast rules on the subject of corrosion and expected lifespan. The following may be considered a guide as to what can be expected from the various materials and finishes currently available for cable support systems.

a) Aluminium – Aluminium is also a popular choice of material for cable ladders. Most frequently it is selected because of its excellent performance in marine environments such as is found on wharves, coal loaders or similar Port Facilities where salt spray or salt laden atmosphere is present. Another reason for using aluminium is that it offers a long maintenance free life which is important in cases where access for future painting or repairs may be costly and difficult.

For any given load class or capacity, aluminium cable ladders are more expensive than their galvanised steel counterparts. Aluminium ladders can also be expected to have a greater deflection than an equivalent steel system. On the other hand, they are lighter, more readily handled and are easy to work with, resulting in faster installation and therefore lower installation cost.

Aluminium cable ladders can be expected to have a lifespan well in excess of twenty years in most industrial or marine applications. The exception would be in the case of a local concentration of chemicals which are detrimental to aluminium.

Alkaline compounds or fumes is a common example but if any doubt exists, the advice of aluminium suppliers should be sought.

b) Galvanised Steel – Heavy duty galvanised steel (after fabrication) is a common selection, as it is economical to purchase and suitable for most conditions of outdoor exposure. For indoor applications, or anywhere that is essentially free from moisture, galvanised ladders can be considered to have an indefinite life. That is, they should last as long as the plant, building, cabling or equipment which they service.

On a typical industrial or processing plant installation, exposed to weather, moisture and airborne industrial pollution, a basic life of approximately ten years can be expected. This is not to say that the ladder will be completely corroded in that time, but it is the probable life of the corrosion protection finish. Beyond that time, rapid decay can be expected and maintenance costs will increase substantially in order to keep the ladders serviceable.

The ten year life quoted here should be adjusted up or down depending on the circumstances. For example, if installed near the coast, the effect of salt laden air may shorten the expected life. Also galvanising is sensitive to some chemicals, especially sulphurous compounds, which may be intrinsic to plant operations where the ladder is installed. Correspondingly, a longer life will be expected in lighter industrial situations and if drier conditions exist.

c) Powder Coating or Paint Systems:

1. Coating on bare steel.

Painting over bare steel is not generally recommended for cable ladders. This comment applies to virtually all types of 'organic' or non-metallic coatings such as powder coatings, polyesters, PVC or nylon. Although these coatings are resistant to a wide variety of chemicals, their effectiveness on cable ladders can be limited. The non-sacrificial nature of paint films means that anywhere the coating is broken, corrosion is permitted to obtain a foot-hold. It is then able to spread rapidly underneath the paint, lifting it off and allowing corrosion to progress even further.

If it is decided to use a paint or powder coating on bare steel, then before commissioning, a compatible repair paint should be used to make good any places on the ladder installation that my have been damaged during erection.

2. Coating over galvanised Steel or Aluminium

Application of paint systems over either of the above materials is obviously a more expensive approach, but in some circumstances it is the only answer. If ladders are installed in close proximity to acid tanks, process vats, steam pipes or similar situations, there may be no metallic finish capable of giving satisfactory service life. This can be overcome by the application of a suitable paint or powder coating over galvanised or aluminium base materials. Naturally, in order to contain costs, the additional finish need only be applied to those sections of the work which are effectively exposed to the corrosive fumes.

d) Stainless Steel – Stainless Steel is sometimes considered as a material for cable ladders, usually where extremely high corrosion resistance, coupled with difficulty of servicing after installation and a high degree of reliability are essential requirements. An off-shore oil drilling platform may be one example where these conditions exist.

UNISTRUT®

NEMA CABLE LADDER - GENERAL INFORMATION

THE NEMA STANDARDS

NEMA STANDARD VE 1 is published by the National Electrical Manufacturers Association in the U.S.A. The Standard provides for the technical requirements of construction, performance and testing of cable ladder tray systems. It is regularly revised by the Association in order to keep pace with technology and the ever changing requirements of the manufacturers, contractors, consultants and other users throughout the electrical industry.

There is presently no Australasian Standard governing cable support systems. Despite the existence of other versions from places such as Canada and Europe, the NEMA VE 1 is by far the most widely accepted and the best known Standard for cable supports in Australia and New Zealand. In recognition of this situation, and in order to produce cable ladders of known quality and load capacity, Unistrut® has adopted a policy of constructing and rating its cable support products in accordance with the VE 1 Standard wherever possible. This policy is reflected in the name and various class designation numbers now used by Unistrut® which are drawn directly from the Standard.

For example NEMA Class 12B, 16A or 20B. Please note that in most cases Unistrut® ladders exceed the minimum strength requirements of each ladder class and therefore the published load graphs should be consulted in order to find the actual safe load capacity for each ladder type.

The more important aspects of the NEMA Standard VE 1 which are relevant to Unistrut® products are described as follows:

1. LOAD CAPACITY AND SAFETY FACTOR

Safe working loads are required to be determined as a result of testing a series of sample ladders. Tests must be conducted as simple spans (i.e. the worst case for loading) and over various span lengths with a safety factor of 1.5 against the collapse load of the ladder. In this way, loads are based on average performance of a number of samples and not just a single test or some calculations. The Standard does not permit working loads to be determined by calculation because it has proven to be too unreliable. Cable ladders are specialist products which are unconventional in the structural sense. That is, they have an unusual combination of slenderness, local buckling of thin material and overall lateral restraint elements which are not satisfactorily interpreted by normal design methods.

2. DEFLECTION

The NEMA Standard VE 1 does not specify any limitation on the deflection of cable support members. To do so, would inevitably result in an over-designed (and hence uneconomical) system. For further information on deflection please refer to notes under Guidelines for Ladder Selection.

3. ELECTRICAL CONTINUITY

The electrical resistance of connections is limited to a maximum of 330 micro-ohms. Representative samples of Unistrut® splice joints (both steel and aluminium) as well as the run to side-rail joint in aluminium ladders have been tested by an Independent Electrical Laboratory, and in all cases were found to comply with the NEMA Standard VE 1 specification.

EXPLANATION OF NEMA VE 1 LOAD/SPAN CLASS DESIGNATIONS

The NEMA VE 1 rating method is based on the Imperial system of measurement, as follows:

1. The numerals indicate the ladder span in feet.

8 = 8ft (2.4m)

12 = 12ft (3.6m)

16 = 16ft (4.8m)

20 = 20ft (6.0m)

2. The letter indicates the working load category.

A = 50lbs/lin.ft (75kg/m)

B = 75lbs/lin.ft (112kg/m

C = 100lbs/lin.ft (149kg/m)

Example: A 20B class ladder requires a minimum safe working load of 75lb/ft. over a 20ft.span. (ie.112kg/m over a 6.0m span)

UNISTRUT®

NEMA CABLE LADDER SUPPORT SYSTEMS - PICTORIAL INDEX

ALUMINIUM CABLE LADDER

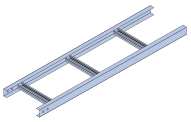

NEMA AL8
CABLE LADDER

PG. 61

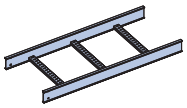

NEMA AL12
CABLE LADDER

PG. 62

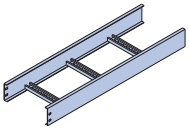

NEMA AL12B
CABLE LADDER

PG. 63

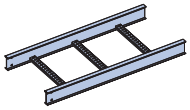

NEMA AL16
CABLE LADDER

PG. 64

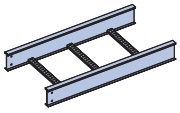

NEMA AL20
CABLE LADDER

PG. 65

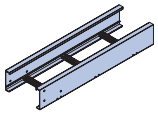

NEMA AL20C
CABLE LADDER

PG. 66

STEEL CABLE LADDER

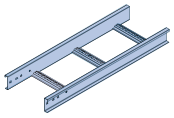

NEMA 16A
CABLE LADDER - STEEL

PG. 68

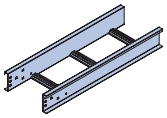

NEMA 20B
CABLE LADDER - STEEL

PG. 69

NEMA CABLE LADDER ACCESSORIES

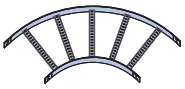

HORIZONTAL BEND

PG. 70

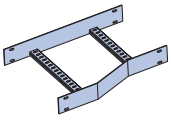

REDUCERS

PG. 70

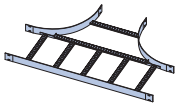

HORIZONTAL TEES

PG. 70

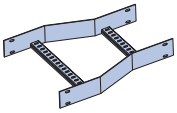

CONCENTRIC REDUCER

PG. 70

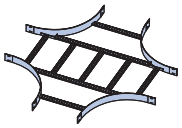

HORIZONTAL CROSSES

PG. 70

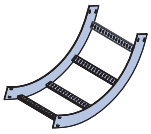

VERTICAL RISER/DROPPER

PG. 70

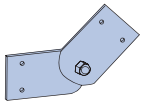

LADDER VERTICAL HINGE

PG. 70

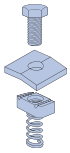

LADDER SQ WASHER HOLD DOWN BRACKET

PG. 70

LADDER SPLICE PLATE

PG. 70

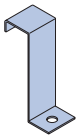

LADDER Z HOLD DOWN BRACKET

PG. 70

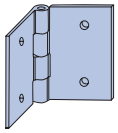

HORIZONTAL HINGE

PG. 70

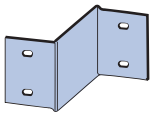

REDUCING SPLICE PLATE

PG. 70

CABLE LADDER AND CABLE TRAY COVERS

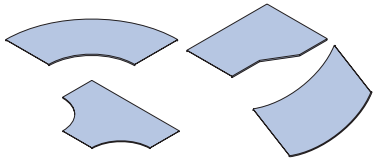

ACCESSORY COVERS

PG. 71

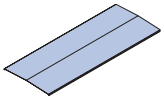

STANDARD COVERS

PG. 71

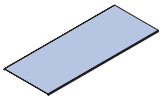

FLAT COVERS

PG. 71

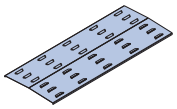

VENTILATED COVERS

PG. 71

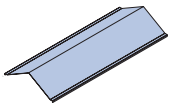

PEAKED COVERS

PG. 71

UNISTRUT®

NEMA CABLE LADDER - ALUMINIUM

ALUMINIUM CABLE LADDER (ACL)

Wherever severe corrosion conditions are present, or a long maintenance free life is required, Unistrut® aluminium cable ladder systems are the obvious choice.

Unistrut® manufactures a complete range of Aluminium cable ladder systems that conform to NEMA VE1. These systems provide a wide range of load and span combinations to suit the requirements of almost any installation.

Most frequently, aluminium cable ladders are selected because of their excellent performance in marine environments where salt spray or salt laden atmosphere is present. Applications such as wharves, coal loader conveyors or similar port facilities as well as coal mines, smelters, chemical processing plants and refineries are all typical users of aluminium cable ladders.

SPLICE PLATES

The unique Unistrut® aluminium system splice plate is close fitting so that it is retained neatly and firmly on the cable ladder side rail. The splice design also permits up to 10mm of expansion and contraction movement at each joint – an important consideration with aluminium cable ladders – eliminates the need to place special expansion splices at predetermined intervals. The installation procedure for the splice connection is fast and simple.

Notes

To attain maximum working load of the system, the following recommendations should be adopted:

- *Do not splice single spans of ladder.*
- *Avoid splice joints in the vicinity of the end supports on continuous runs.*
- *Avoid splice joints directly over intermediate supports on continuous runs.*
- *Locate splice joints at the quarter span point between supports on continuous runs.*

If in doubt, please consult your Unistrut® Service Centre.

ACCESSORIES

All aluminium cable ladder systems are complemented by a full range of standardised fabricated accessories and fittings which are readily available.

BUILT-IN SPLICE

The principal feature of all Unistrut® cable ladder accessories is the 'built-in' plate. An extension of the accessory side-rail permits direct connection to the straight ladder, eliminating the need for a separate splice component.

The advantages of this method are:

- Minimised fixing hardware and components.
- When joining to a cut ladder, the accessory end acts as a convenient drill template for bolt holes.
- Simplified pre-planning, quantity take-offs and ordering.
- No left-over components.
- Strong and rigid joint.
- Faster installation.

Accessories are attached with the same fasteners as used for straight splice plates.
Elongated slots allow easier fit-up and permit adjustments in alignment to be absorbed.

HOLD-DOWN BRACKETS

The general purpose hold-down bracket can be positioned at any point along ladder length, even in the situation where a rung and support member coincide. The bracket provides a large bearing area for the side-rail and permits free expansion movement to occur.

For side mounted ladders, or where rigid fixing of ladder is required, the rigid clamping bracket can be used.

CONSTRUCTION

Unistrut® aluminium cable ladder systems are manufactured from high strength alloy 6063-T6 for all extruded components to AS / NZS1866 and 5005 for sheet or plate components to AS / NZS1734. These alloys are suitable for marine applications and offer excellent all round corrosion resistance. All fasteners are made from 300 series grade of stainless steel for optimum corrosion resistance.

The rungs are fillet welded to the side rails, which further improves the overall stability as well as strength of finished product.

UNISTRUT®

NEMA AL8 CABLE LADDER

TECHNICAL DATA

Cable Depth: 30mm

Loading Data:
Basic Load Capacity = 96kgs/lin.m on 2.4m span.

Length: 6m

Rung Spacing: 300mm nominal

PARTS LIST

Dim "W"	Type	Part No.
150	8	AL8 150
300	8	AL8 300
450	8	AL8 450
600	8	AL8 600
750	8	AL8 750
900	8	AL8 900

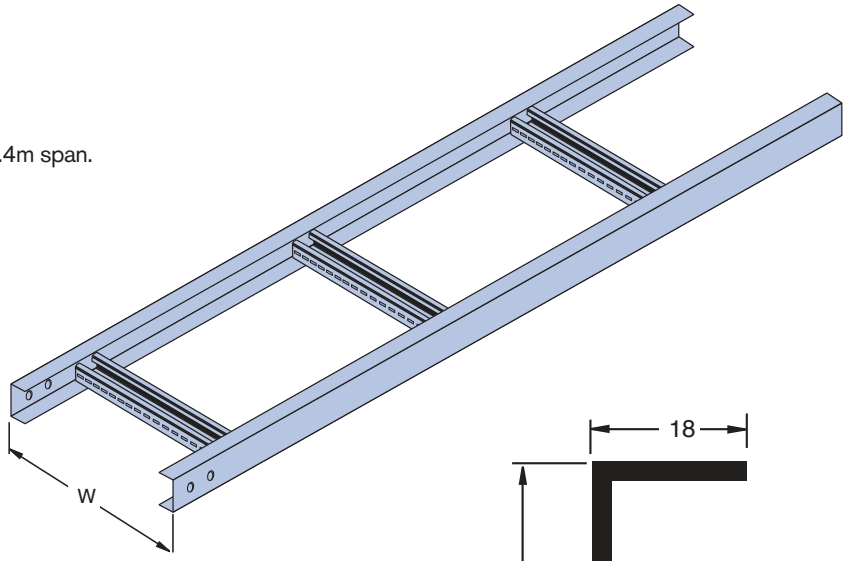

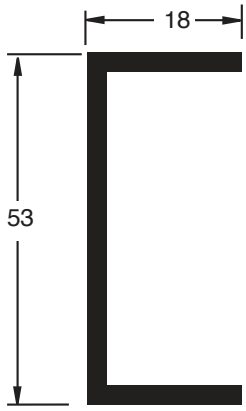

ALLOWABLE LOAD GRAPH

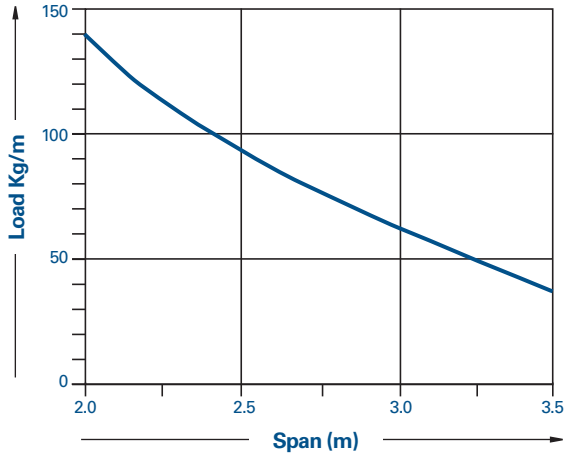

Allowable loads are determined generally in accordance with NEMA standard VE 1 and verified by testing. Safety factor = 1.5 on collapse load for single span.

DEFLECTION GRAPH

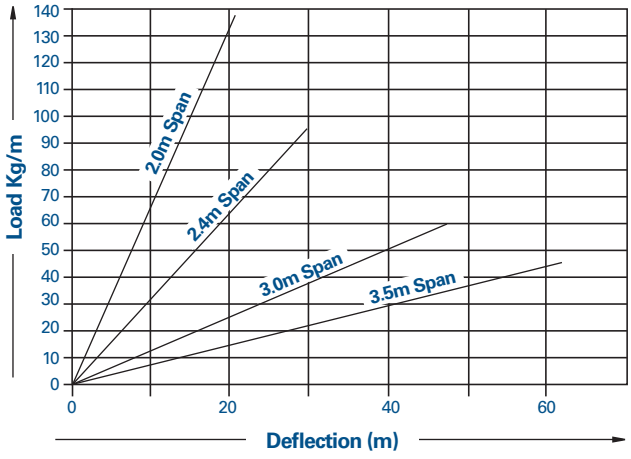

Deflections shown apply to the end-bays (ie. worst case) of a continuous ladder run. To find deflection of a single span, multiply by 2.5.

UNISTRUT®

NEMA AL12 CABLE LADDER

TECHNICAL DATA

Cable Depth: 70mm

Loading Data:
Basic Load Capacity = 140kgs/lin.m on 3.0m span.

Length: 6m

Rung Spacing: 300mm nominal

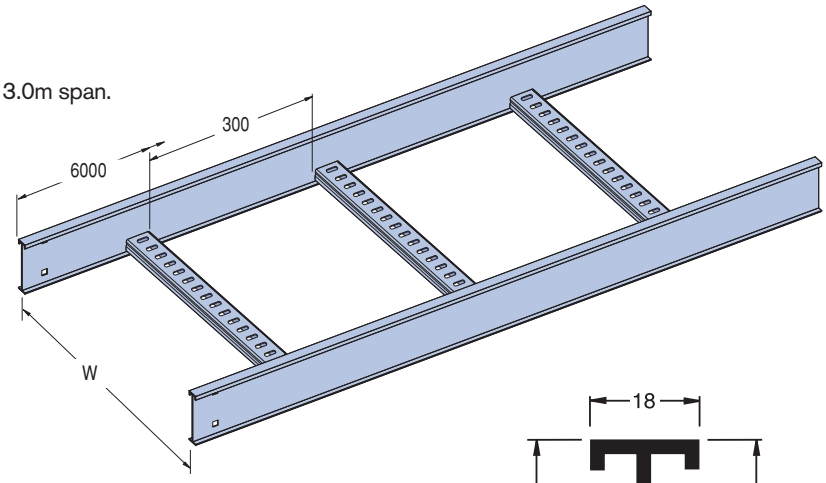

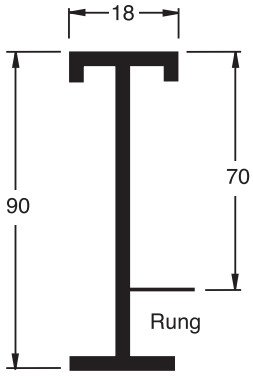

PARTS LIST

Dim "W"	Type	Part No.
150	12	AL12 150
300	12	AL12 300
450	12	AL12 450
600	12	AL12 600
750	12	AL12 750
900	12	AL12 900

ALLOWABLE LOAD GRAPH

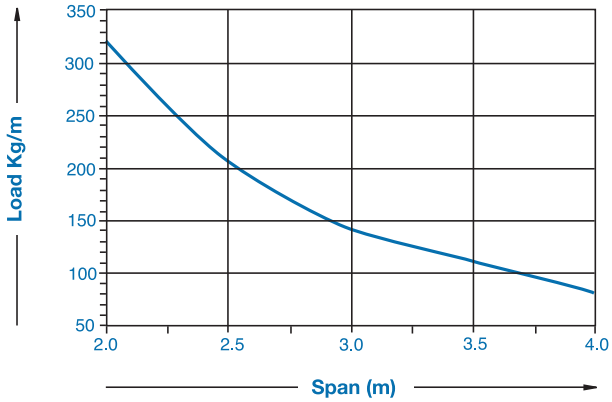

Allowable loads are determined generally in accordance with NEMA standard VE 1 and verified by testing. Safety factor = 1.5 on collapse load for single span.

DEFLECTION GRAPH

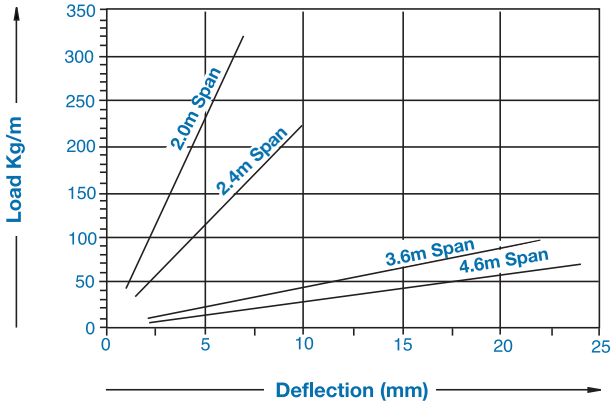

Deflections shown apply to the end-bays (ie. worst case) of a continuous ladder run. To find deflection of a single span, multiply by 2.5.

UNISTRUT®

NEMA AL12B CABLE LADDER

TECHNICAL DATA

Cable Depth: 88mm

Loading Data:
Basic Load Capacity = 150kgs/lin.m on 3.0m span.

Length: 6m

Rung Spacing: 300mm nominal

PARTS LIST

Dim "W"	Type	Part No.
150	12B	AL12B 150
300	12B	AL12B 300
450	12B	AL12B 450
600	12B	AL12B 600
750	12B	AL12B 750
900	12B	AL12B 900

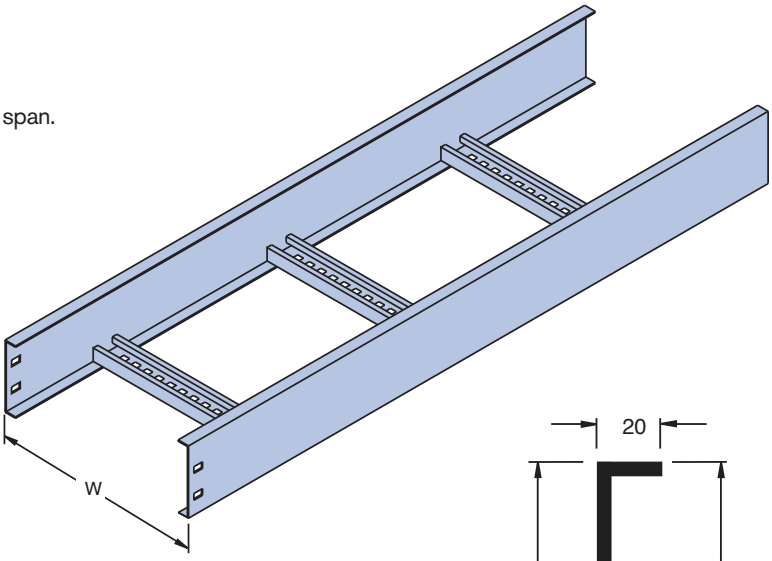

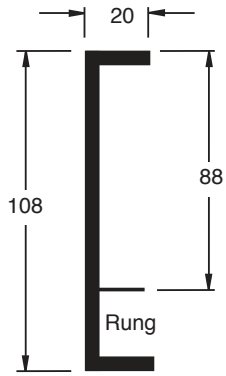

ALLOWABLE LOAD GRAPH

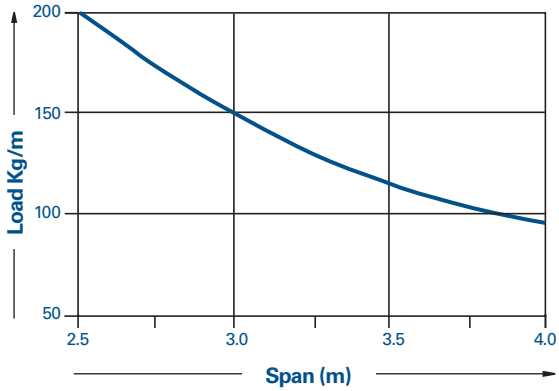

Allowable loads are determined generally in accordance with NEMA standard VE 1 and verified by testing. Safety factor = 1.5 on collapse load for single span.

DEFLECTION GRAPH

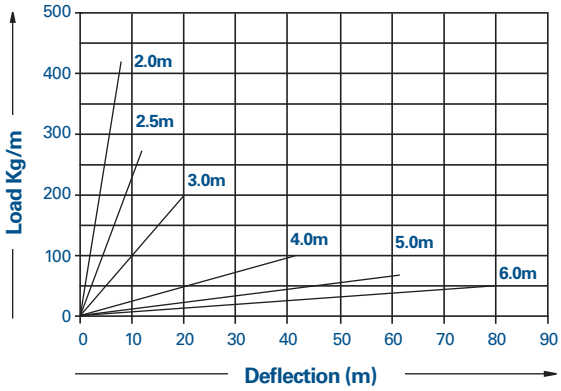

Deflections shown apply to the end-bays (ie. worst case) of a continuous ladder run. To find deflection of a single span, multiply by 2.5.

UNISTRUT®

NEMA AL16 CABLE LADDER

TECHNICAL DATA

Cable Depth: 80mm

Loading Data:
Basic Load Capacity = 225 kgs/lin.m on 3.0m span.

Length: 6m

Rung Spacing: 300mm nominal

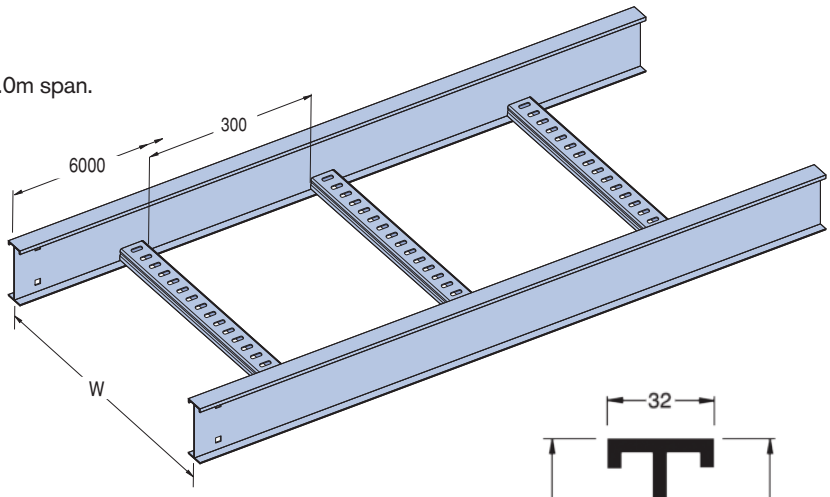

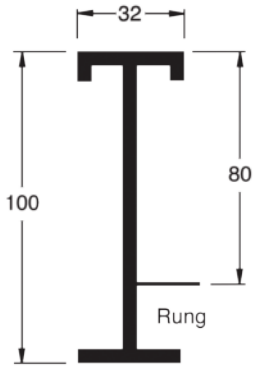

PARTS LIST

Dim "W"	Type	Part No.
150	16	AL16 150
300	16	AL16 300
450	16	AL16 450
600	16	AL16 600
750	16	AL16 750
900	16	AL16 900

ALLOWABLE LOAD GRAPH

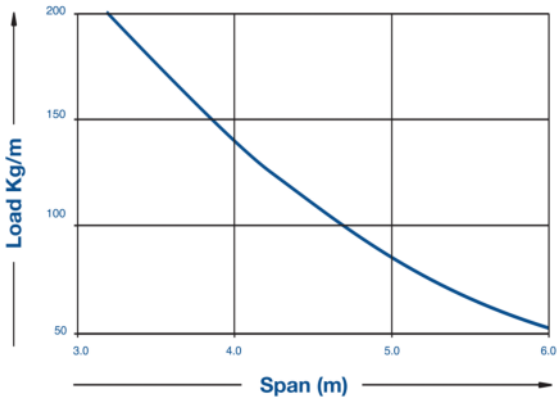

Allowable loads are determined generally in accordance with NEMA standard VE 1 and verified by testing. Safety factor = 1.5 on collapse load for single span.

DEFLECTION GRAPH

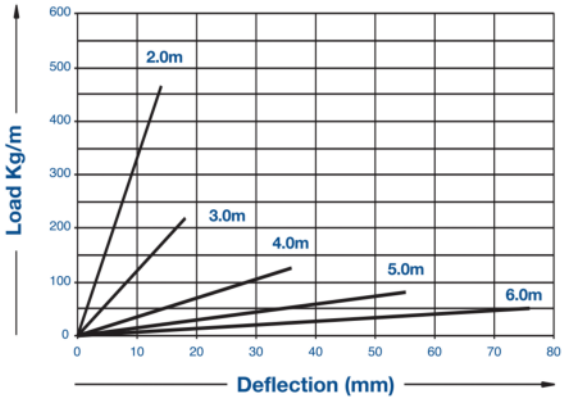

Deflections shown apply to the end-bays (ie. worst case) of a continuous ladder run. To find deflection of a single span, multiply by 2.5.

UNISTRUT®

NEMA AL20 CABLE LADDER

TECHNICAL DATA

Cable Depth: 100mm

Loading Data:
Basic Load Capacity = 370 kgs/lin.m on 3.0m span.

Length: 6m

Rung Spacing: 300mm nominal

PARTS LIST

Dim "W"	Type	Part No.
150	20	AL20 150
300	20	AL20 300
450	20	AL20 450
600	20	AL20 600
750	20	AL20 750
900	20	AL20 900

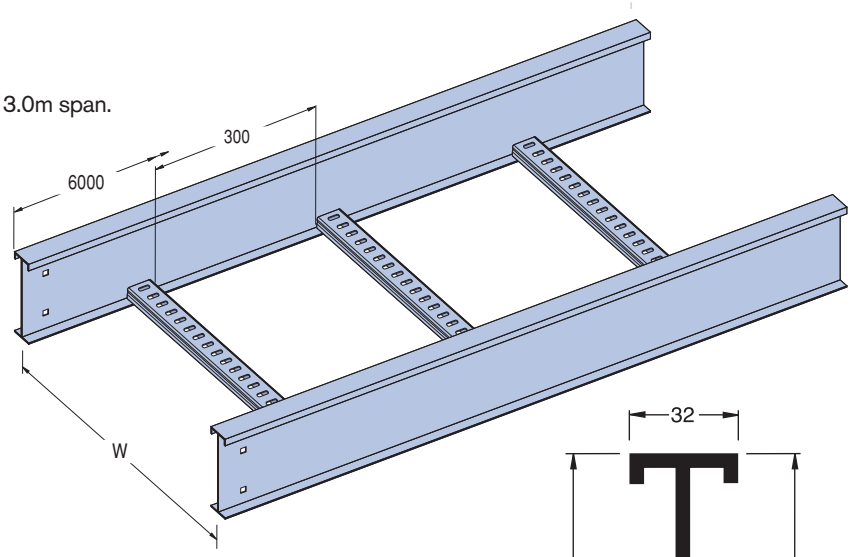

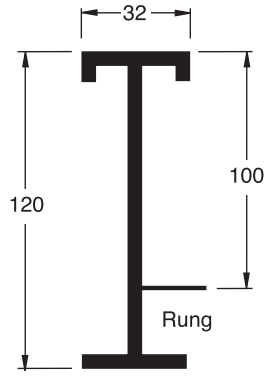

ALLOWABLE LOAD GRAPH

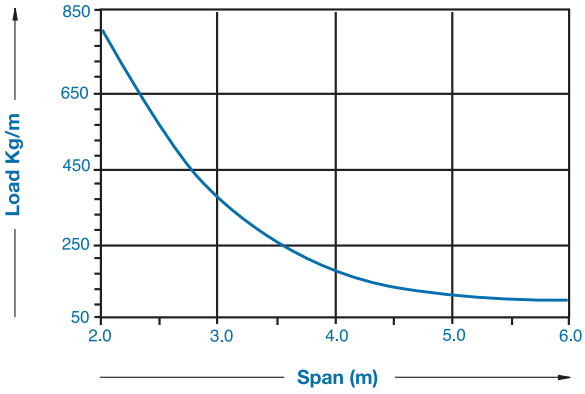

Allowable loads are determined generally in accordance with NEMA standard VE 1 and verified by testing. Safety factor = 1.5 on collapse load for single span.

DEFLECTION GRAPH

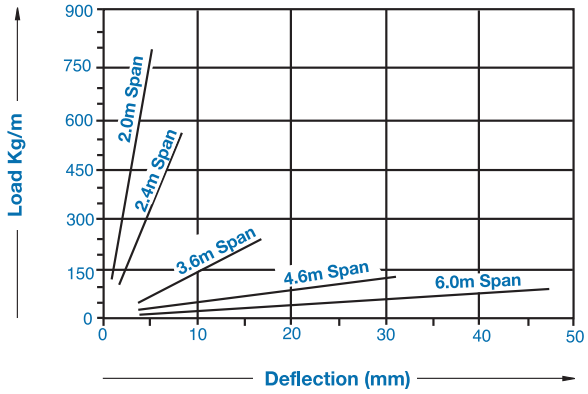

Deflections shown apply to the end-bays (ie. worst case) of a continuous ladder run. To find deflection of a single span, multiply by 2.5.

NEMA CABLE LADDER - STEEL

STEEL CABLE LADDER (SCL)

Galvanised steel cable ladders are a recognised format for cable support systems as they afford a good combination of cost, strength and service life. Unistrut® manufactures a complete range of NEMA Steel Cable Ladder systems. These systems provide a wide range of load and span combinations to suit the requirement of almost any installations.

Side-Rail Alternative - All ladder systems are available with the side-rails turned outward (as standard), or inward to meet varying client specifications.

All ladder systems are load rated to NEMA Standard VE 1.

Stainless Steel - In cases where extremely high corrosion resistance is required, stainless steel cable ladder may be the only solution. All steel cable ladder systems are available in stainless steel on special order only. For load and deflection calculations, contact your local Unistrut® Service Centre.

SPLICE PLATES

16A and 20B Systems - Unistrut® steel splice plates are of a robust and practical design. The neat fitting flanges and bolted configuration of Unistrut® splices also reduce deflection at joints as the ladder is loaded. Unsightly dips or discontinuities along the ladder run are therefore avoided. Bolt holes in splice plates and ladder side-rails are elongated so that site misalignments as well as thermal expansion and contraction are catered for.

Notes

Electrical resistance across splice joints is less than the 330 micro-ohms limit specified by NEMA Standard VE 1.
To attain maximum working load of the system, the following recommendations should be adopted.

- *Do not splice single spans of ladder.*
- *Avoid splice joints in the vicinity of the end supports on continuous runs.*
- *Avoid splice joints directly over intermediate supports on continuous runs.*
- *Locate splice joints at the quarter span point between supports on continuous runs.*

If in doubt, please consult your Unistrut® Service Centre.

ACCESSORIES

All Unistrut® steel cable ladder systems are complemented by a full range of standardised fabricated accessories and fittings which are readily available. All are of a welded construction.

Built-in Splice - The principal feature of all Unistrut® cable ladder accessories is the 'built-in' splice plate. A shaped extension of the accessory side-rail permits direct connection to the straight ladder eliminating the need for a separate splice component.

The advantages of this method are:

- Minimised fixing hardware and components.
- When joining to a cut ladder, the accessory end acts as a convenient drill template for bolt holes.
- Simplifies pre-planning, quantity take-offs and ordering.
- No left-over components.
- Strong and rigid joint.
- Faster installation.

Accessories are attached with the same fasteners as used for straight splice plates.
Threaded fasteners are heavy duty galvanised.
Elongated slots allow easier fit-up and permit adjustments in alignment to be absorbed.

CONSTRUCTION

Unistrut® steel cable ladders are manufactured from steel to AS/NZS1594 "Hot-Rolled Steel Flat Products," which are cold roll formed to the desired shape. The roll forming process improves the mechanical properties of the metal whilst the special lipped strut section is designed to give the best possible combination of strength-to-weight, lateral rigidity and low deflection. The rungs are fillet welded to the side-rails which further improves the overall stability as well as strength of the finished product. The rung joint is so designed that galvanising can be effected to all areas.

Ladders, accessories and other galvanised components are heavy duty galvanised to AS/NZS 4680 / BS EN ISO 1461 after fabrication.

UNISTRUT®

NEMA 16A CABLE LADDER - STEEL

TECHNICAL DATA

Cable Laying Depth: 72mm

Loading Data:
Basic Load Capacity
64kg/lin.m on 6m span
90kg/lin.m on 4.8m span
230kg/lin.m on 3m span

Length: 6m

Rung Spacing: 300mm nominal

Standard Finish: Heavy Duty Galvanised
Also available in Stainless Steel Grade 316

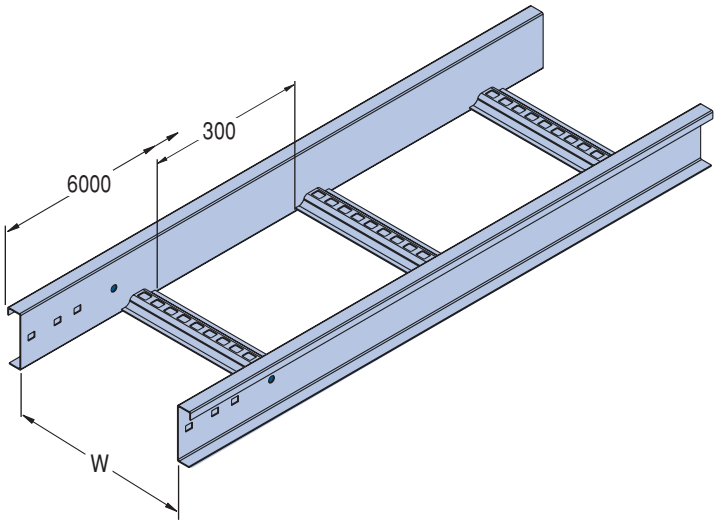

PARTS LIST

Dim "W"	Type	Part No.
150	16	16A150
300	16	16A300
450	16	16A450
600	16	16A600
750	16	16A750
900	16	16A900

Please specify RI or RO when ordering
* Splice plate & fixing screws are not included (order separately).

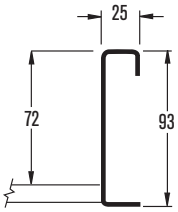

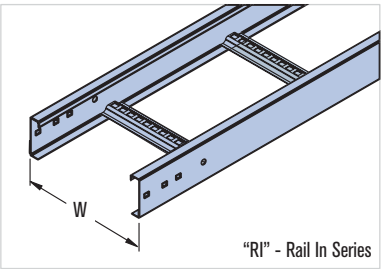

ALLOWABLE LOAD GRAPH

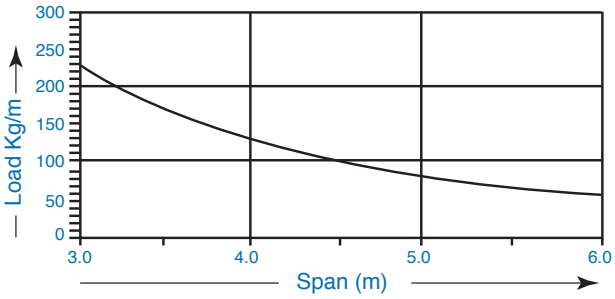

Allowable loads are determined generally in accordance with NEMA Standard VE1 and verified by testing. Safety Factor = 1.5 on collapse load for single span.

DEFLECTION GRAPH

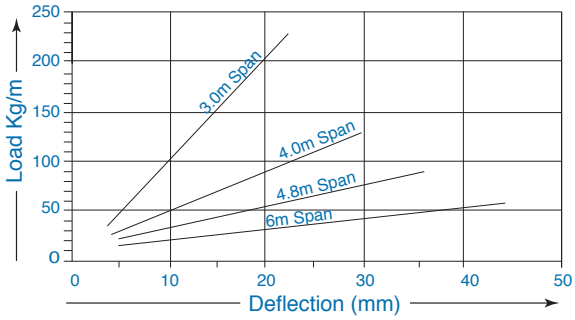

Deflections shown apply to the end-bays (ie. worst case) of a continuous ladder run. To find deflection of a single span, multiply by 2.5.

UNISTRUT®

NEMA 20B CABLE LADDER - STEEL

TECHNICAL DATA

Cable Laying Depth: 109mm

Loading Data:
Basic Load Capacity
136kg/lin.m on 6m span
544kg/lin.m on 3m span

Length: 6m

Rung Spacing: 300mm nominal

Standard Finish: Heavy Duty Galvanised
Also available in Stainless Steel Grade 316

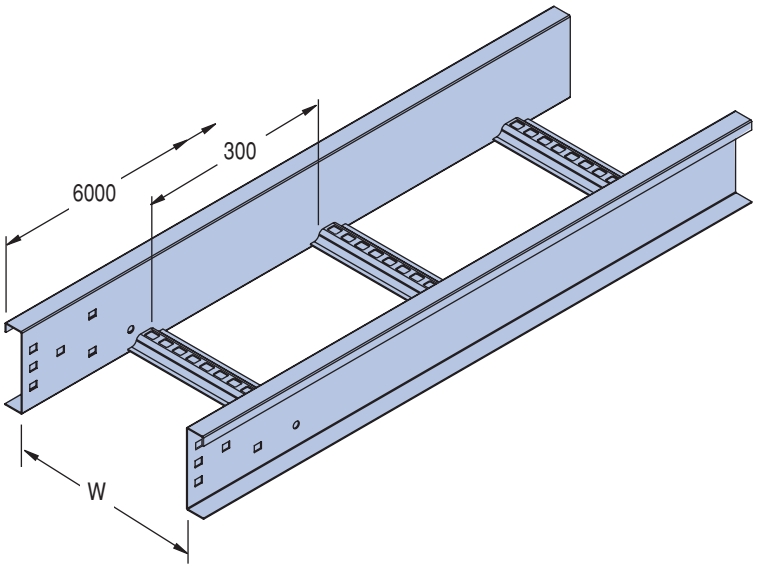

PARTS LIST

Dim "W"	Type	Part No.
150	20B	20B150
300	20B	20B300
450	20B	20B450
600	20B	20B600
750	20B	20B750
900	20B	20B900

Please specify RI or RO when ordering
* Splice plate & fixing screws are not included (order separately).

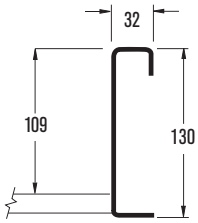

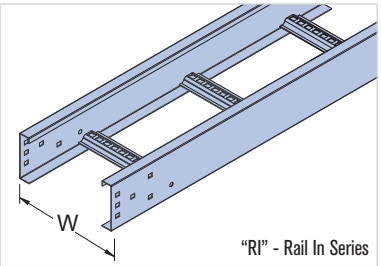

ALLOWABLE LOAD GRAPH

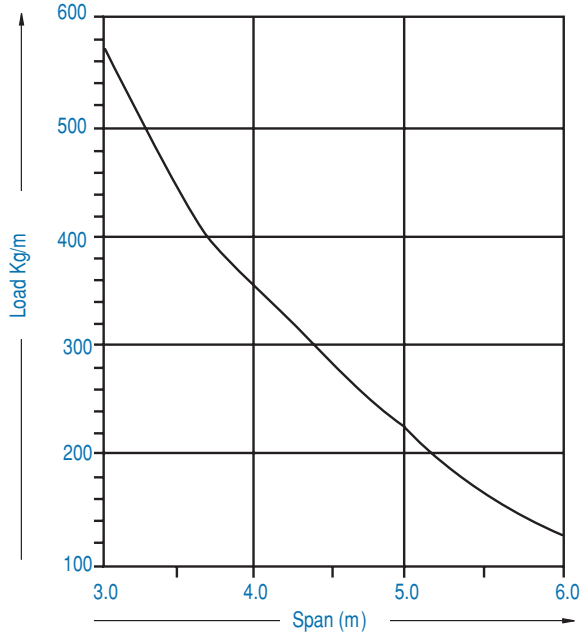

Allowable loads are determined generally in accordance with NEMA Standard VE1 and verified by testing. Safety Factor = 1.5 on collapse load for single span.

DEFLECTION GRAPH

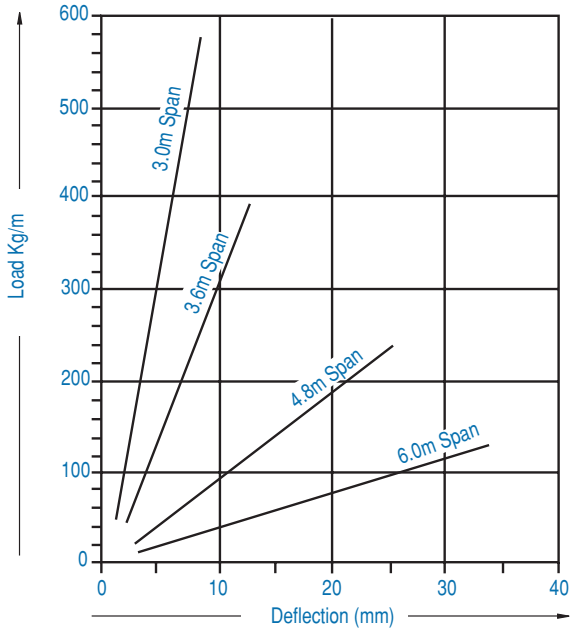

Deflections shown apply to the end-bays (ie. worst case) of a continuous ladder run. To find deflection of a single span, multiply by 2.5.

UNISTRUT®

NEMA CABLE LADDER ACCESSORIES

HORIZONTAL BEND

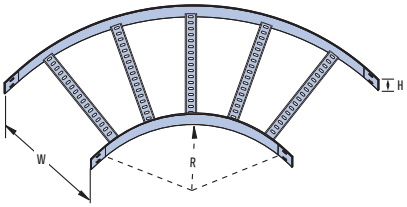

REDUCERS

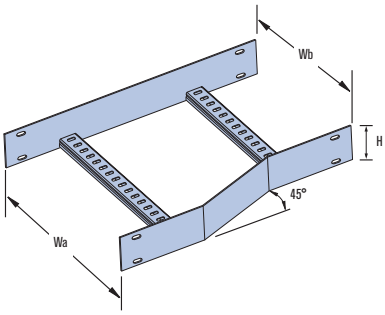

Note: Left or Right Hand (L/H shown)

HORIZONTAL TEES

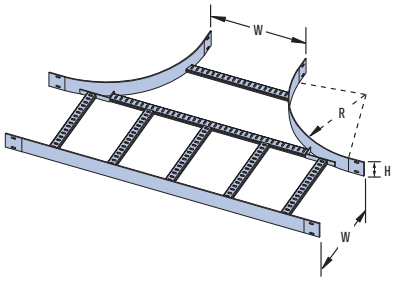

CONCENTRIC REDUCER

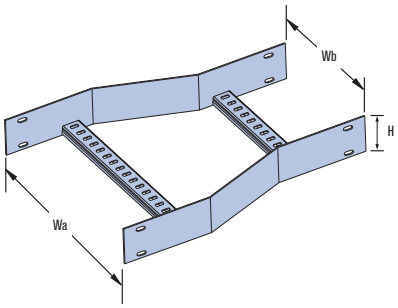

HORIZONTAL CROSSES

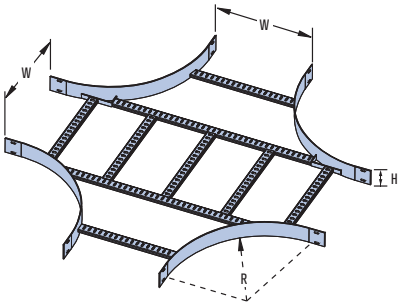

VERTICAL RISER/DROPPER

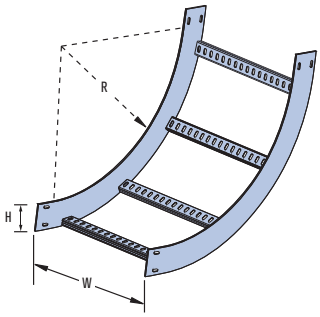

LADDER VERTICAL HINGE

Note: Supplied in pairs

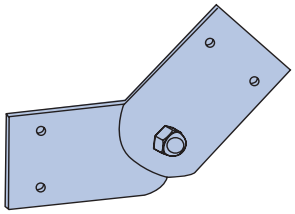

HORIZONTAL HINGE

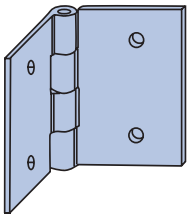

LADDER SPLICE PLATE

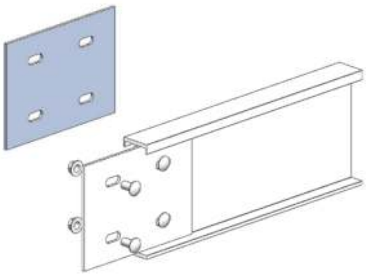

REDUCING SPLICE PLATE

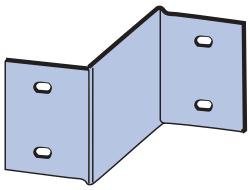

LADDER SQ WASHER HOLD DOWN BRACKET

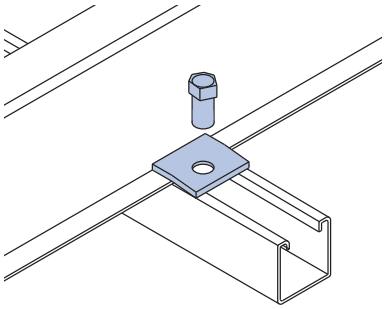

LADDER Z HOLD DOWN BRACKET

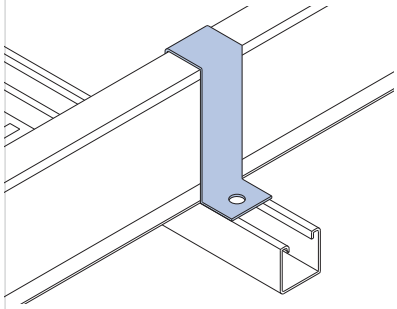

CABLE LADDER AND CABLE TRAY COVERS

LADDER AND TRAY COVERS

Covers are normally specified where protection is required:

1. To safeguard against damage to cable and insulation from falling objects–dropped tools, discarded cigarettes, sparks or solid materials.
2. Covers protect cable insulation and fixings (plastic ties etc.) from harmful effects of ultra-violet light and/or weathering deterioration.
3. In areas where high levels of airborne particles are present, covers prevent accumulation of dust or other debris on cables, which may cause heat build up, fire hazards or absorb moisture, which may shorten life of installation.

AVAILABILITY

Standard covers are available for all Unistrut® cable ladder systems. Standard length is 3 meters. Flat, peaked or ventilated covers are available by special order.

MATERIAL

Aluminium Systems: Aluminium alloy 5005. Suitable for marine applications and compatible with the 6106-T6 alloy used in ladders.

Steel Systems: Galvabond, Heavy Duty Galvanised steel sheet to AS 1397.

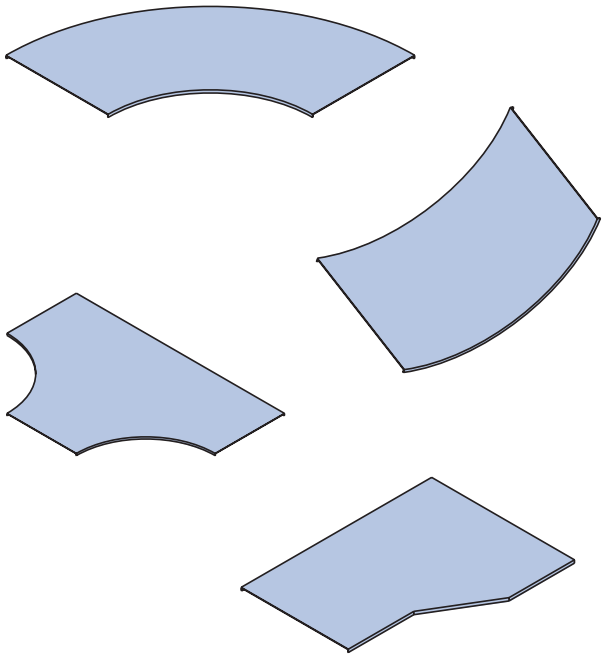

ACCESSORY COVERS

Flat covers are available to match shaped accessories of all Unistrut/ACS Cable Ladder Systems, in both steel and aluminium. Materials are the same as for straight covers.

Note: Accessory covers are identical for all steel and aluminium cable ladder systems. When ordering, please specify width and radius.

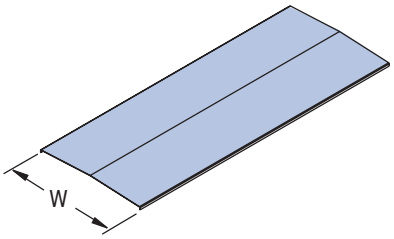

STANDARD COVERS

The 3-5° crease allows for maximum protection to cables. The standard cover has a 3-5° crease for added rigidity.

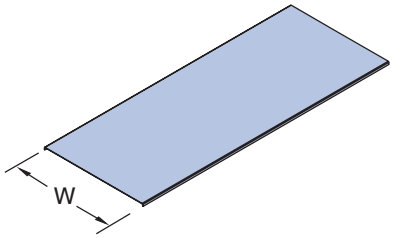

FLAT COVERS

Most commonly used where there is space restrictions and the use of standard and peaked covers is not practical.

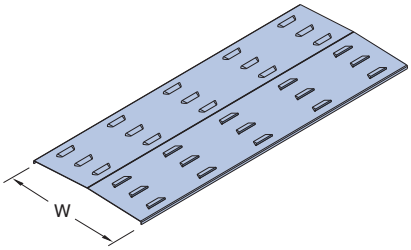

VENTILATED COVERS

Should be used wherever reasonable protection for cables is required and where there is also a primary requirement to allow the escape of heat generated by cable.

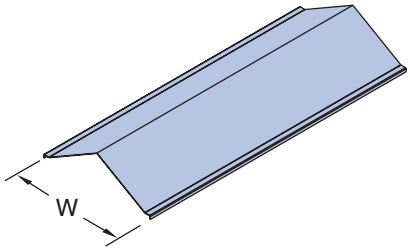

PEAKED COVERS

Used in very dusty situations where the self cleaning effect of slopping sides prevents excessive dust accumulations. The large air-space above the cables also assists with the dissipation of heat.

UNISTRUT®

NEMA CABLE LADDER ACCESSORIES SUPPORTS

Accessories for all Unistrut® cable ladder systems are available in the following standard widths - 150, 300, 450, 600, 750 or 900mm.
SCL (Steel Cable Ladder) and ACL (Aluminium Cable Ladder).

Steel Cable Ladder	
Ladder System	Standard Radius
Nema 16A, Nema 20B	300mm

Aluminium Cable Ladder	
Ladder System	Standard Radius
AL8, AL12, AL12B, AL16, AL20, AL20C	300mm

Fixed bends and Internal or External Risers are readily available with a 90° angle. Other angles (30°, 45° or 60°) and other radii (300, 450, 600 or 900mm) can be supplied on special request. The radii also applies to Tees and Crosses.
All support locations below are in accordance with NEMA standard VE2.

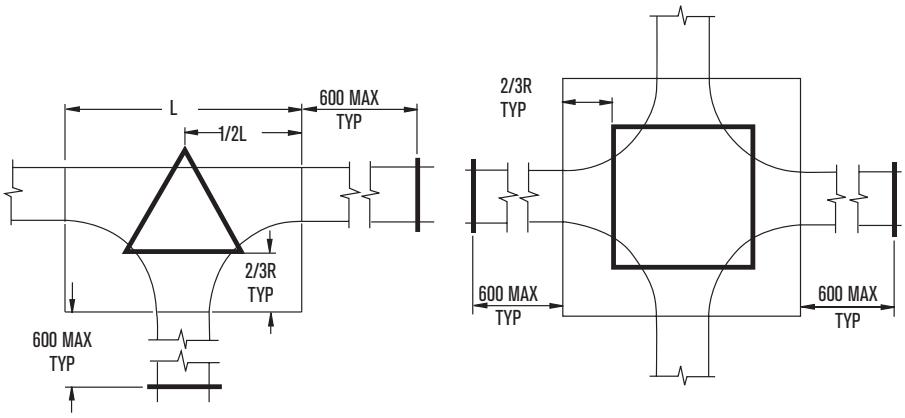

For smaller radius accessories and /or lightly loaded ladders, the support methods shown may be reduced or even eliminated. This is best determined at the point of installation or consult your local Unistrut® Service Centre.

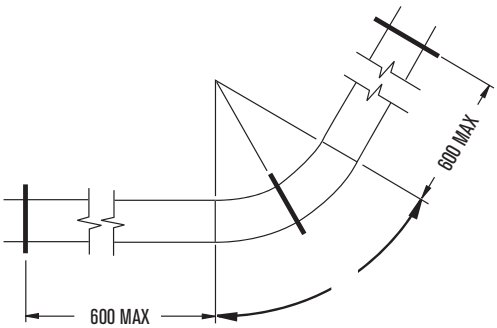

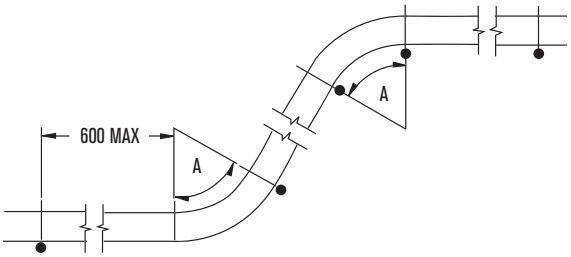

For narrower ladders and smaller angles, the bend centre support may be deleted.

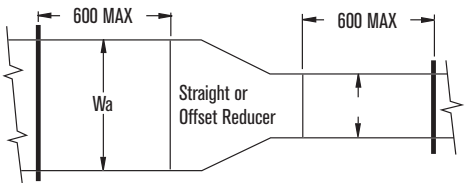

Straight Reducer plus left and right hand offset reducers are available for all Unistrut® Cable Ladder systems.

Major
Width: Wa 300, 450, 600, 450, 600, 600

Minor
Width: Wb 150, 150, 150, 300, 300, 450

Reducer splice plates are also available for all ladder systems.