F-2000BT

SPEAKER SYSTEM

The F-2000 Series Speaker are compact two-way speaker systems designed for high efficiency, wide range, and high power input handling capability. These speaker systems can be installed in a manner ideal for the location and intended application.

Article number:F-2000BT
Alternative products: F-2000B, F-2000BTWP, F-2000W, F-2000WT, F-2000WTWP

Specifications

Sensitivity (1#W, 1#m)	92 dB at installation in 1/2 free sound field 93 dB at installation in 1/2 free sound field with horn adapter
Frequency response	65 Hz - 20 kHz (-10 dB)
Connection	Clamp terminal
Crossover frequency	2500 Hz
Rated input (high impedance)	60 W
Tappings	100 V : 170 Ω (60 W) / 330 Ω (30 W) / 670 Ω (15 W) / 3.3 kΩ (3 W) 70 V : 83 Ω (60 W) /170 Ω (30 W) / 330 Ω (15 W) / 670 Ω (7.5 W) / 3.3 kΩ (1.5 W)
Rated input (low impedance)	60 W (continuous pink noise), 180 W (continuous program) in 8Ω mode
Rated impedance	8 Ω
Speaker component	Low: 20 cm cone-type, High: 2.5 cm balanced dome-type
Finish	HIPS resin, black (RAL 9011 or equivalent),

©TOA Electronics Europe GmbH | Data subject to change without notice.
EN, 2022/09/14

F-2000BT

SPEAKER SYSTEM

Appearance

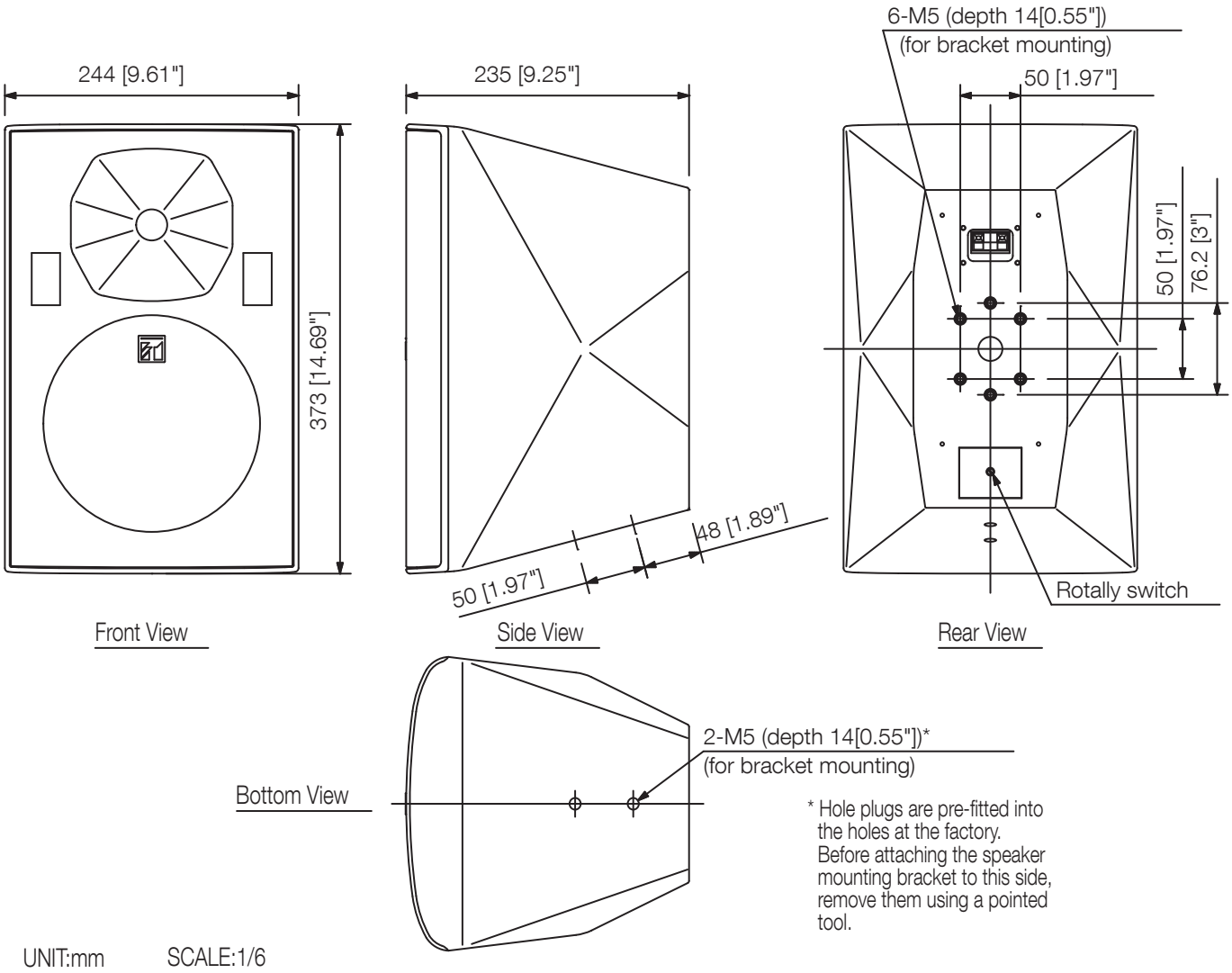

©TOA Electronics Europe GmbH | Data subject to change without notice.
EN, 2022/09/14