AT-303AP

ATTENUATOR

The AT-303AP is a flush-mounted wall attenuator and uses a transformer which allows connection of a wide range of loads (30 W or less). Volume can be adjusted in five steps. The AT-303AP features push-in terminal block for easy connection.

Article number:AT-303AP

Specifications

Finish	ABS resin, white,
Operating temperature	-10 °C to +50 °C

We supply sound, not equipment.
www.toa.eu.

©TOA Electronics Europe GmbH | Data subject to change without notice.
EN, 2022/09/14

AT-303AP

ATTENUATOR

Appearance

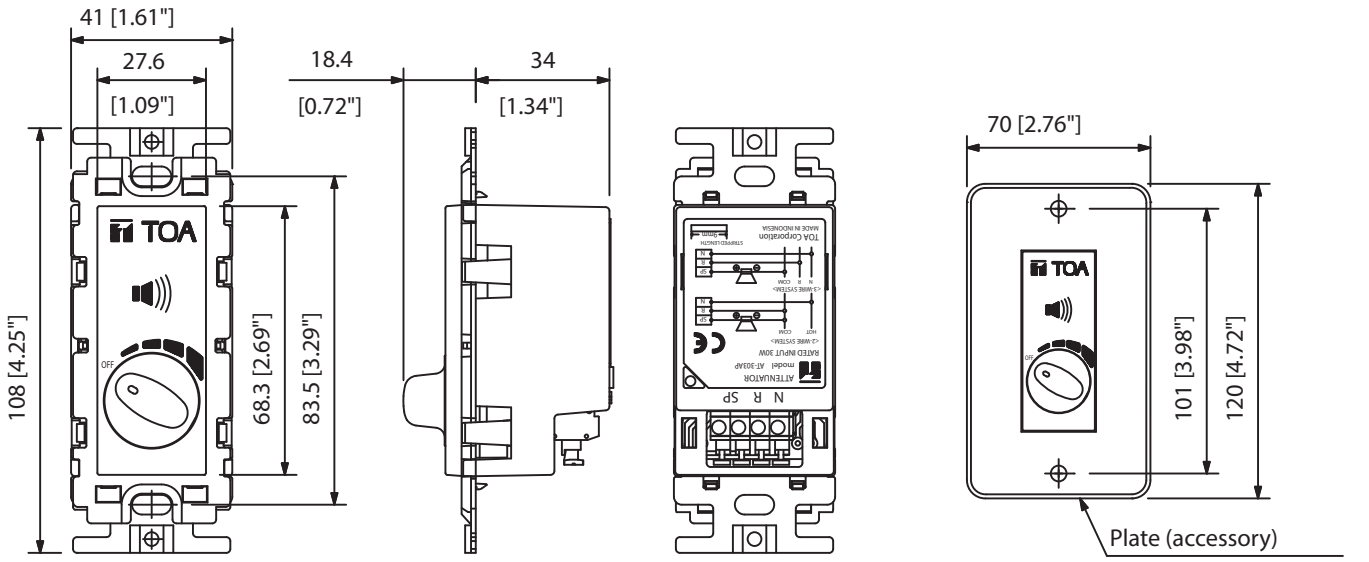

Front View | Side View | Rear View | Figure with the supplied plate attached (SCALE:1/3)

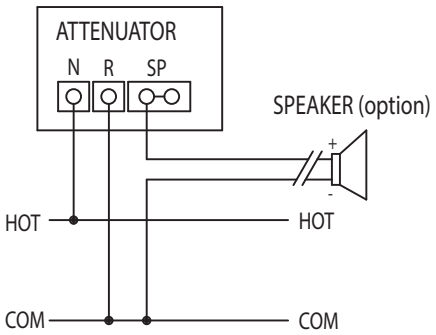

2-WIRE SYSTEM

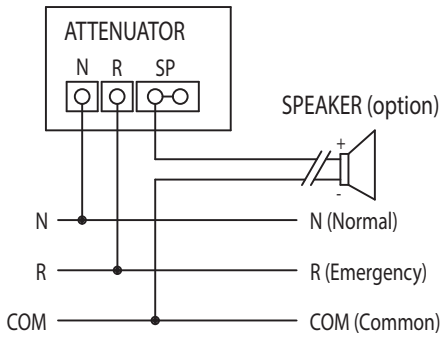

3-WIRE SYSTEM

UNIT:mm SCALE:1/2

©TOA Electronics Europe GmbH | Data subject to change without notice.
EN, 2022/09/14