Data sheet
theLuxa P300 BK
Article number: 1010611

Presence and motion detectors
Motion detectors/ Spotlights

theLuxa P300 BK — Article number: 1010611

Description



- Motion detector (PIR)
- Automatic lighting control based on presence and brightness
- 300° detection angle
- For outdoor use
- For installation on walls and ceilings
- For larger, commercial outdoors properties such as offices, public buildings, hotels, schools, car parks and warehouses
- Adjustable brightness switching value and switch-off delay
- Sensitivity can be reduced to limit detection area
- Area limit via lens attachment
- Mixed light measurement suitable for the control of fluorescent, incandescent, halogen lamps and LEDs
- Teach-in of current brightness value possible
- Pulse function
- Test function for checking detection area
- Installation on flush-mounted socket possible (60 mm)
- Single-handed plug-in installation
- Instant start-up possible via factory preset
- Controls are place protected
- Terminal for protective earth conductor
- Spacer and corner angle included in delivery

Technical data

Operating voltage	230 V AC
Frequency	50 Hz
Stand-by consumption	~0,3 W
Light measurement	Mixed light measurement
Number of channels	1
Installation type	Wall and ceiling installation
Setting range brightness	5 – 1000 lx
Switching capacity light	10 A (at 230 V AC, cos φ = 1), , 10 AX (at 230 V AC, cos φ = 0.3)
Detection angle	300°
Installation height	2 – 4 m
Light switch-off delay	1 s-20 min
Incandescent lamp load	2300 W
Fluorescent lamp load (conventional) parallel-corrected	1300 VA 140 µF
Energy saving lamps	300 W
Inrush current	max. 800 A / 200 µs
LED lamp < 2 W	60 W
LED lamp 2-8 W	180 W
LED lamp > 8 W	200 W
Lamps	Incandescent/halogen lamps, fluorescent lamps, Energy saving lamps, LEDs
Ambient temperature	-25 °C ... +45 °C
Protection class	II
Type of protection	IP 55

HAMER | 27 Dalziel Place, Woolston, Christchurch | 0800 239 239 | www.hamer.co.nz

Connection example

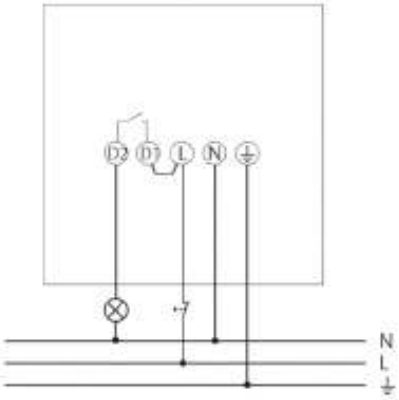

Detection range

Mounting height (A)	Head on to (r)	Diagonally (t)
2 m	4 m	12 m
2,5 m	5 m	16 m
3 m	5 m	16 m
3,5 m	5 m	16 m
4 m	4 m	12 m

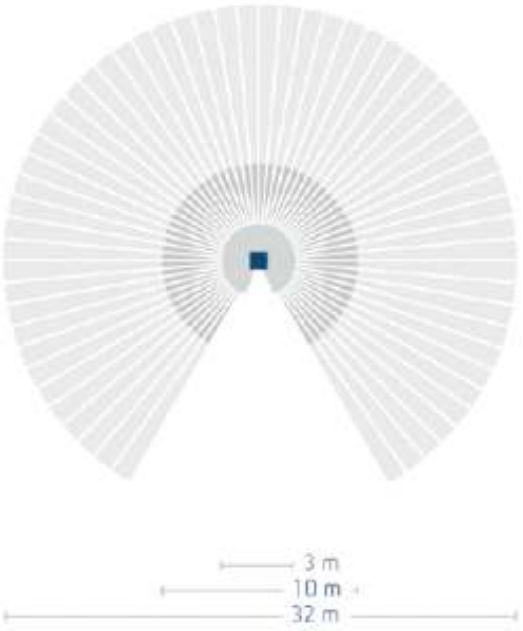

HAMER | 27 Dalziel Place, Woolston, Christchurch | 0800 239 239 | www.hamer.co.nz

Scale drawings

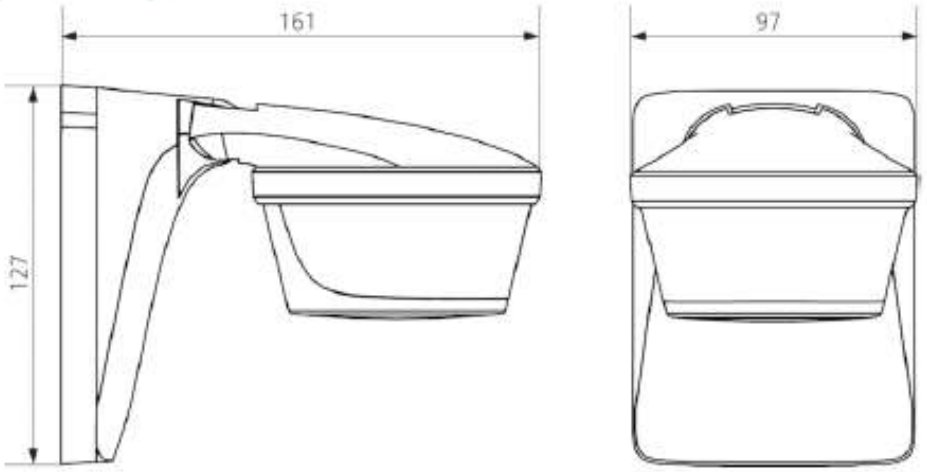

Accessories

Corner angle theLuxa P BK

- Article number: 9070905
  Details ▸ www.theben.de



Spacer theLuxa P BK

- Article number: 9070909
  Details ▸ www.theben.de



theSenda P

- Article number: 9070910
  Details ▸ www.theben.de



theSenda S

- Article number: 9070911
  Details ▸ www.theben.de

