Product Details

Hotel Hair Dryers

PRO 1200W

Product Code: ALIH010001



- Hard wire application
- One heat/speed settings
- Ergonomic safety release button
- Integrated overheating and circuit protection
- Double insulated
- 240V AC / 1200W
- White with black nozzle

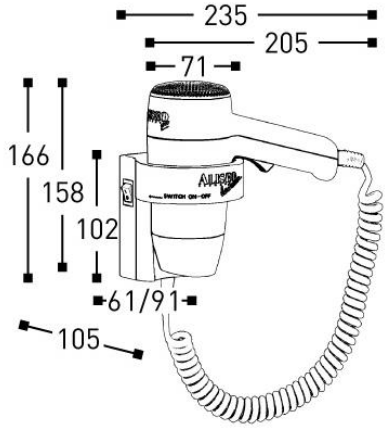

Cleaning Instructions – Hair Dryer:

- Disconnect the hair dryer from the power supply.
- Wipe the case of the hair dryer with a damp (NOT wet) cloth.
- Polish with a dry cotton cloth.

ALISEO GmbH GERMANY

PO Box 437, Cambridge 3450, New Zealand
Tel: +64 7 823 5790 | Fax: +64 7 823 5792
Email: office@splwashrooms.co.nz | Web: www.splwashrooms.co.nz

SPL premium washroom products