48290506

Socomec TE-90 Solid Core CT 600-2000A 64 x 64mm Holes 90mm Centres for Digiware and DIRIS A-xx

CURRENT TRANSFORMERS AND TRANSDUCERS

Component type	Current transformer
Range	TE Solid Core
Model	N/A
Product status	New Item

The Socomec Solid Core CTs are designed for use with Diris A-40, A-200, and Digiware I modules. They are quick to install, have a wide range of nominal current, and are highly accurate. Each CT is sold with a wide range of accessories to allow for flexibility in installation position within a switchboard or distribution board. The Socomec RJ12 cables are available in multiple length options.

ELECTRICAL	**Primary rated current**	2000 A
	Secondary current on CT	0.1 A
	Rated operating frequency	50-60 Hz
	Max. operating voltage (Umax)	600 V
	Rated short time thermal current Ith (x primary current)	20 kA
	Accuracy class	0.2S
	Over current limiting factor	FS 10
	Secondary rated apparent power	0.1 VA
	Calibrated	Yes
CONSTRUCTION	**Current transformer type**	Solid core
	Material housing	Plastic
	Model	Through-feed current converter
	With shock protection	Yes
	Snap mounting	Yes
	With copper rail	Yes
	Secondary connection	Plug-in connection
	Number of primary inputs	1
DIMENSIONS	**Opening diameter**	64 mm
	Height opening	64-64 mm
	Width opening	64-64 mm
ENVIRONMENT	**Storage temperature**	-25…85 °C

DIMENSIONAL DIAGRAM

Dimensions in/mm

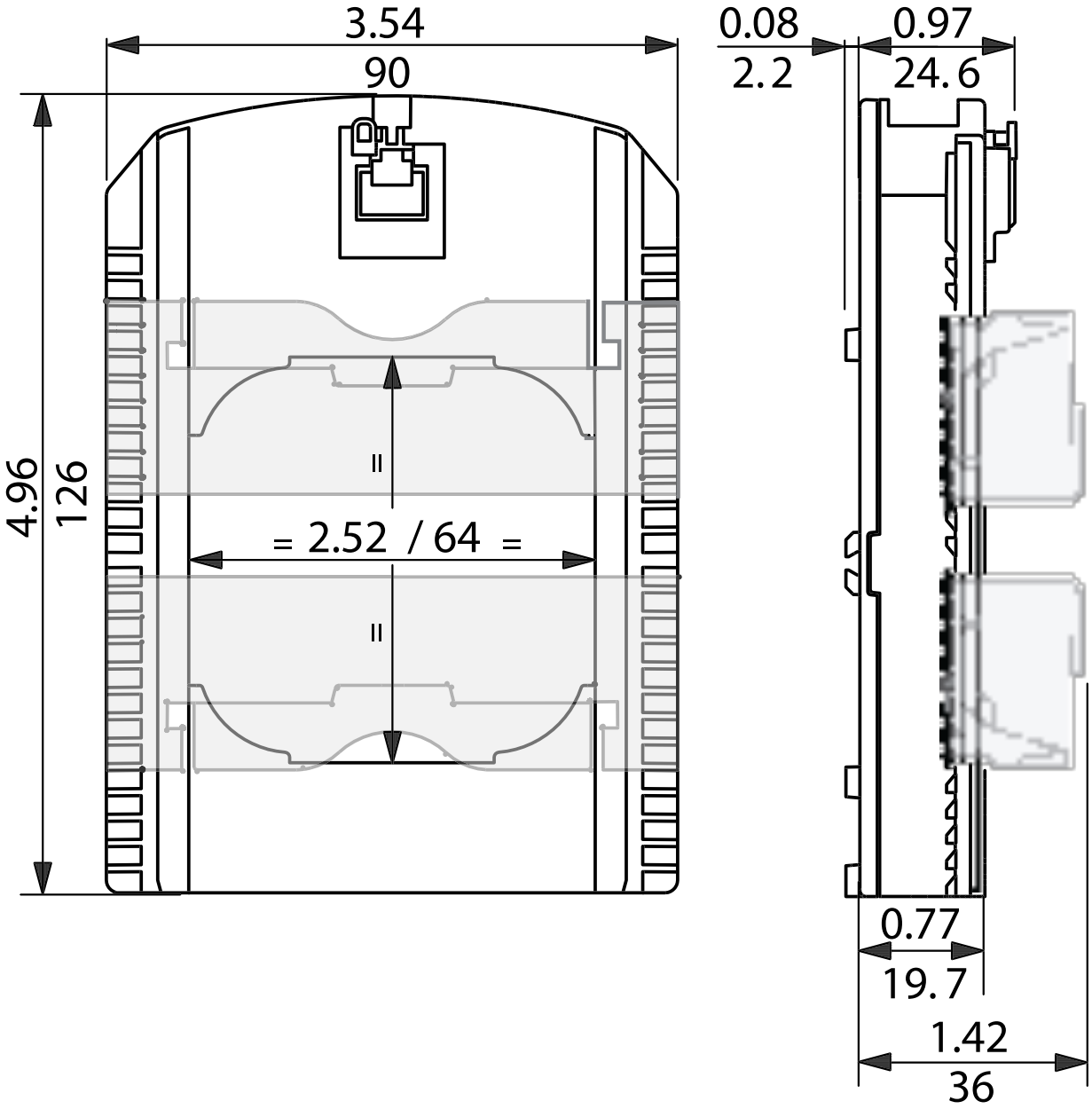

48290506

Socomec TE-90 Solid Core CT 600-2000A 64 x 64mm Holes 90mm Centres for Digiware and DIRIS A-xx

CURRENT TRANSFORMERS AND TRANSDUCERS

socomec Innovative Power Solutions

ELECTRICAL CONNECTION DIAGRAM

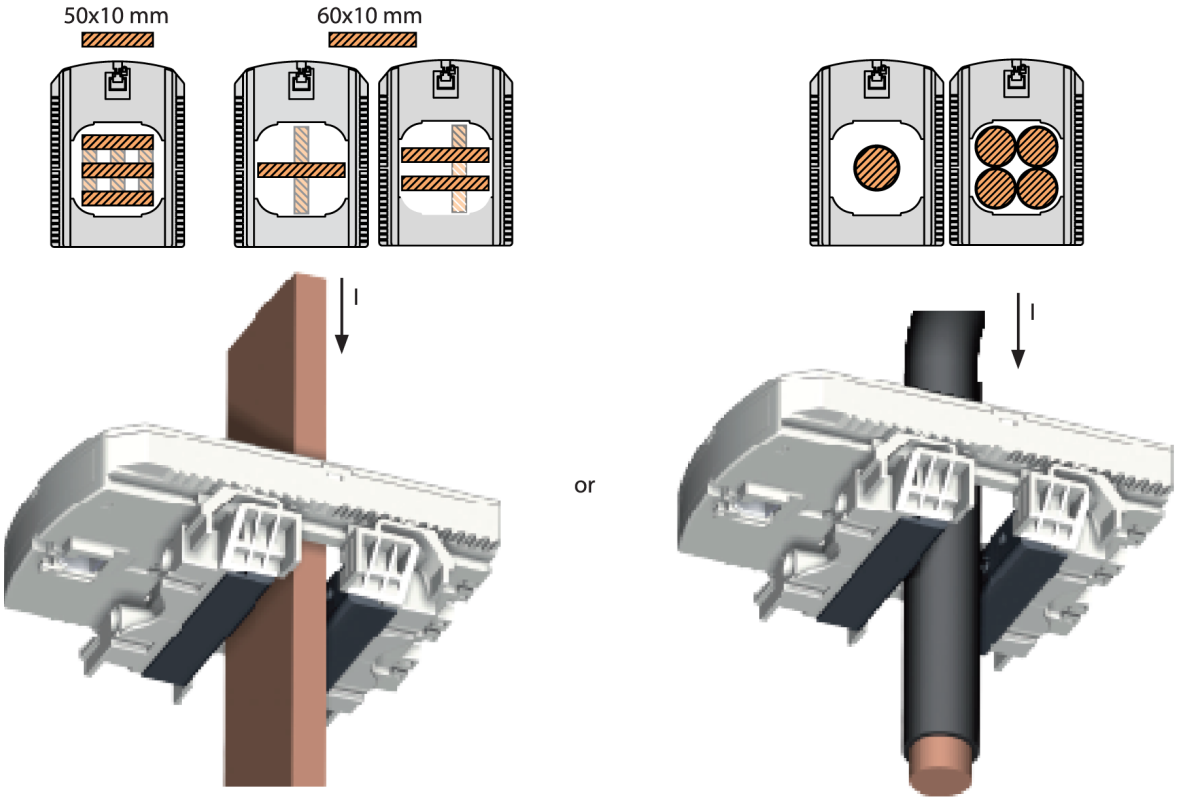

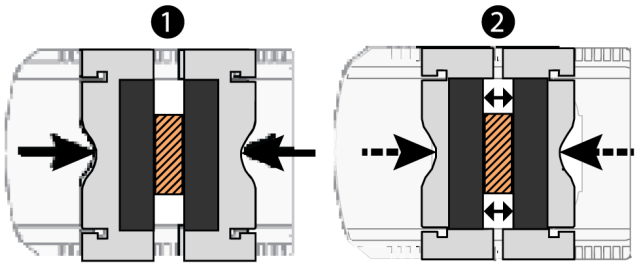

Tighten the jaws on both sides of the cable by applying pressure.

The jaws must be perpendicular to the holding notches.

Published on 25 July 2025

RELATED PRODUCTS

ACCESSORY

Item No: 48290580
Required: No
Description: Socomec RJ12 x 3 CT to Meter Cable for Digiware and DIRIS A-xx 0.1m

Item No: 48290581
Required: No
Description: Socomec RJ12 x 3 CT to Meter Cable for Digiware and DIRIS A-xx 0.2m

Item No: 48290582
Required: No
Description: Socomec RJ12 x 3 CT to Meter Cable for Digiware and DIRIS A-xx 0.3m

Item No: 48290583
Required: No
Description: Socomec RJ12 x 3 CT to Meter Cable for Digiware and DIRIS A-xx 1m

Item No: 48290584
Required: No
Description: Socomec RJ12 x 3 CT to Meter Cable for Digiware and DIRIS A-xx 2m

Item No: 48290588
Required: No
Description: Socomec RJ12 x 4 CT to Meter Cable for Digiware and DIRIS A-xx 1m

Item No: 48290589
Required: No
Description: Socomec RJ12 x 4 CT to Meter Cable for Digiware and DIRIS A-xx 2m

Item No: 48290590
Required: No
Description: Socomec RJ12 x 6 CT to Meter Cable for Digiware and DIRIS A-xx 0.1m

Item No: 48290591
Required: No
Description: Socomec RJ12 x 6 CT to Meter Cable for Digiware and DIRIS A-xx 0.2m

Item No: 48290592
Required: No
Description: Socomec RJ12 x 6 CT to Meter Cable for Digiware and DIRIS A-xx 0.3m

Item No: 48290593
Required: No
Description: Socomec RJ12 x 6 CT to Meter Cable for Digiware and DIRIS A-xx 1m

Item No: 48290594
Required: No
Description: Socomec RJ12 x 6 CT to Meter Cable for Digiware and DIRIS A-xx 2m

Item No: 48290595
Required: No
Description: Socomec RJ12 x 3 CT to Meter Cable for Digiware and DIRIS A-xx 0.5m

Item No: 48290596
Required: No
Description: Socomec RJ12 x 4 CT to Meter Cable for Digiware and DIRIS A-xx Cable 0.5m

Item No: 48290597
Required: No
Description: Socomec RJ12 x 6 CT to Meter Cable for Digiware and DIRIS A-xx Cable 0.5m

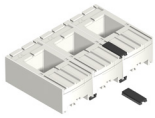

Item No: 48290598
Required: No
Description: Socomec TE CT Coupling Links Pack (Qty 30)

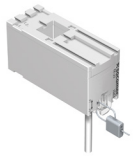

Item No: 48290600
Required: No
Description: Socomec Sealable Cover for TE/TR/iTRs/TF CTs

Item No: 48290602
Required: No
Description: Socomec RJ12 x 1 CT to Meter Cable 600V for Digiware and DIRIS A-xx 5m

RELATED PRODUCTS

ACCESSORY

Item No: 48290603
Required: No
Description: Socomec RJ12 x 1 CT to Meter Cable for Digiware and DIRIS A-xx 10m

Item No: 48290606
Required: No
Description: Socomec RJ12 x 3 CT to Meter Cable for Digiware and DIRIS A-xx 3m