48290170

Socomec Digiware BCM 21 Pole Branch Circuit Monitoring 120A Virtual Monitoring

MODULAR ENERGY MONITORING AND CONNECTIVITY

socomec Innovative Power Solutions

Component type	Multifunction measuring instrument
Range	Digiware S and BCM
Model	N/A
Product status	New Item

The Socomec Digiware S and BCM are All in One Meter and Current Transformer Monitoring and Analysis Modules. With high class 0.5 accuracy and compact design, the devices offer elevated branch circuit monitoring within distribution boards.

ELECTRICAL	Pole type	Three conductor/four conductor
	Voltmeter	No
	Ampere meter	Yes
	Pulse counter	No
	Effective power measurement device	Yes
	Accuracy class active energy according to IEC 62053-22	Other
	Accuracy class reactive energy according to IEC 62053-23	Other
	Voltage type of supply voltage	DC
	Supply voltage DC	24-24 V
	Ethernet-connections	0
COMMUNICATION	Supporting protocol for Modbus	Yes
	Supporting protocol for BACnet	No
	Web server with HTTPS transfer protocol	No
CONSTRUCTION	Model	Measurement transformer
	Number of digital outputs	0
	Mounting method	DIN rail
	Degree of protection (IP), front side	IP20
MECHANICAL	Display	None
	Remote display	No
	Connection system	Screwed terminal
DIMENSIONS	Depth	32 mm
	Width	68 mm
	Height	533.5 mm
ENVIRONMENT	Operating temperature	-10-55
	Storage temperature	-40…70 °C

MODULAR ENERGY MONITORING AND CONNECTIVITY

DIMENSIONAL DIAGRAM

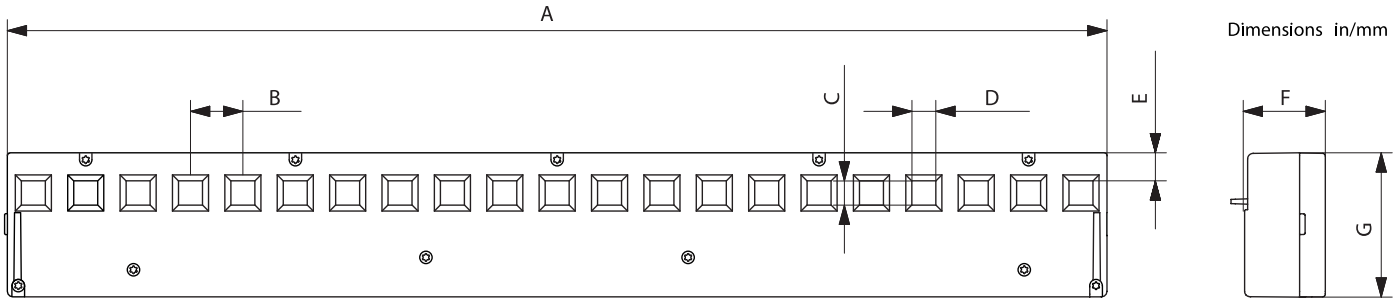

Dimensions in/mm

	A	B	C	D	E	F	G
DIRIS Digiware BCM-2119 / 2119VM	15.75 400	0.75 19	0.35 8,8	0.34 8,6	0.39 10	1.18 30	2.09 53
DIRIS Digiware BCM-2125 / 2125VM	20.98 533,5	0.98 25	0.55 14	0.54 13,6	0.75 19	1.26 32	2.68 68

48290170

Socomec Digiware BCM 21 Pole Branch Circuit Monitoring 120A Virtual Monitoring

MODULAR ENERGY MONITORING AND CONNECTIVITY

ELECTRICAL CONNECTION DIAGRAM

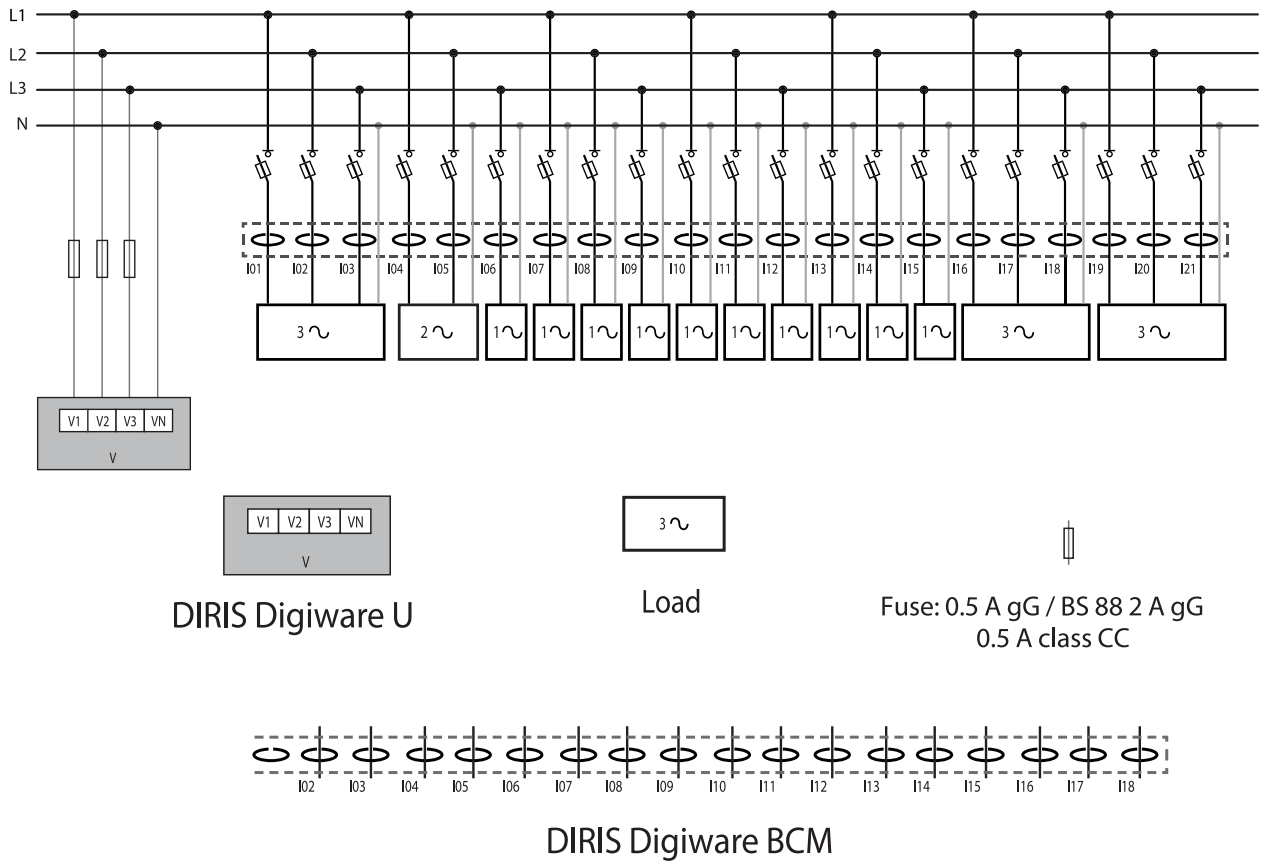

Published on 25 July 2025

RELATED PRODUCTS

ACCESSORY

Item No: 48290180
Required: No
Description: Socomec RJ45 Bus Terminating Resistor for Comms and Power

Item No: 48290181
Required: No
Description: Socomec Digiware RJ45 Comms and Power Cable 0.1m

Item No: 48290182
Required: No
Description: Socomec Digiware RJ45 Comms and Power Cable 0.5m

Item No: 48290183
Required: No
Description: Socomec Digiware RJ45 Comms and Power Cable 1m

Item No: 48290184
Required: No
Description: Socomec Digiware RJ45 Comms and Power Cable 2m

Item No: 48290186
Required: No
Description: Socomec Digiware RJ45 Comms and Power Cable 5m

Item No: 48290187
Required: No
Description: Socomec Digiware RJ45 Comms and Power Cable 10m

Item No: 48290188
Required: No
Description: Socomec Digiware RJ45 Comms and Power Cable 0.2m

Item No: 48290189
Required: No
Description: Socomec Digiware RJ45 Comms and Power Cable 0.06m

Item No: 48290190
Required: No
Description: Socomec Digiware Connector RJ45 Comms and Power Cable 3m

Item No: 48290605
Required: No
Description: Socomec Digiware withdraw Connector Comms and Power Cable (Qty 10)