48290105

Socomec Digiware U-10 3Ph Voltage Reference Module for Energy Meter

MODULAR ENERGY MONITORING AND CONNECTIVITY

Component type	Multifunction measuring instrument
Range	Digiware U
Model	N/A
Product status	New Item

The Digiware U modules measure the voltage reference for the entire Digiware AC system. The single DIN module offers options for basic metering reference or advanced power monitoring and power quality analysis for single and three phase systems. The module transmits the voltage measurement as well as power supply to all products connected to the Digiware bus.

ELECTRICAL

Pole type	Three conductor/four conductor
Voltmeter	Yes
Ampere meter	No
Pulse counter	No
Frequency meter	Yes
Effective power measurement device	No
Accuracy class active energy according to IEC 62053-22	Other
Accuracy class reactive energy according to IEC 62053-23	Other
Voltage type of supply voltage	DC
Supply voltage DC	24-24 V
Measuring range for frequency	45-65 Hz
Sampling frequency	10000 Hz
Ethernet-connections	0
With audit logging (audit log)	No
Number of current measurement inputs	0
Blind power meter	Yes
Number of voltage measurement inputs	4

COMMUNICATION

Supporting protocol for other bus systems	No
Supporting protocol for Modbus	Yes
Supporting protocol for BACnet	No
Web server with HTTPS transfer protocol	No
Supporting protocol for IEC 61850 Ethernet	No
Supporting protocol for OPC UA PubSub	No
Supporting protocol for PROFIBUS	No
Supporting protocol for PROFINET IO	No

COMMUNICATION	With firmware signature	Yes
	With logging of security events (security event log)	No
	With Role Based Access Control (RBAC)	No
CONSTRUCTION	Model	Measurement transformer
	Number of analogue inputs	0
	Number of analogue outputs	0
	Number of digital inputs	0
	Number of digital outputs	0
	Mounting method	DIN rail
	Degree of protection (IP), front side	IP40
MECHANICAL	Display	None
	Remote display	No
	Connection system	Screwed terminal
	With rotational speed meter	No
DIMENSIONS	Depth	65 mm
	Width	18 mm
	Height	90 mm
ENVIRONMENT	Operating temperature	-10-70
	Storage temperature	-25…70 °C

MODULAR ENERGY MONITORING AND CONNECTIVITY

ELECTRICAL CONNECTION DIAGRAM

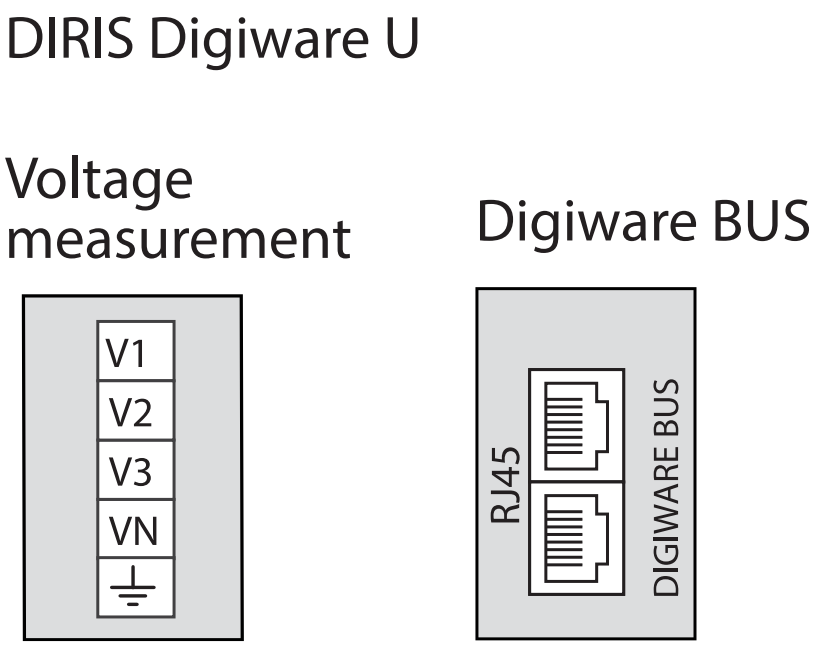

RELATED PRODUCTS

ACCESSORY

Item No: 48290180
Required: No
Description: Socomec RJ45 Bus Terminating Resistor for Comms and Power

Item No: 48290181
Required: No
Description: Socomec Digiware RJ45 Comms and Power Cable 0.1m

Item No: 48290182
Required: No
Description: Socomec Digiware RJ45 Comms and Power Cable 0.5m

Item No: 48290183
Required: No
Description: Socomec Digiware RJ45 Comms and Power Cable 1m

Item No: 48290184
Required: No
Description: Socomec Digiware RJ45 Comms and Power Cable 2m

Item No: 48290186
Required: No
Description: Socomec Digiware RJ45 Comms and Power Cable 5m

Item No: 48290187
Required: No
Description: Socomec Digiware RJ45 Comms and Power Cable 10m

Item No: 48290188
Required: No
Description: Socomec Digiware RJ45 Comms and Power Cable 0.2m

Item No: 48290189
Required: No
Description: Socomec Digiware RJ45 Comms and Power Cable 0.06m

Item No: 48290190
Required: No
Description: Socomec Digiware Connector RJ45 Comms and Power Cable 3m

Item No: 48290605
Required: No
Description: Socomec Digiware withdraw Connector Comms and Power Cable (Qty 10)