Product End of Life Instructions

AUXILIARIES iMSU

End of Life Instructions

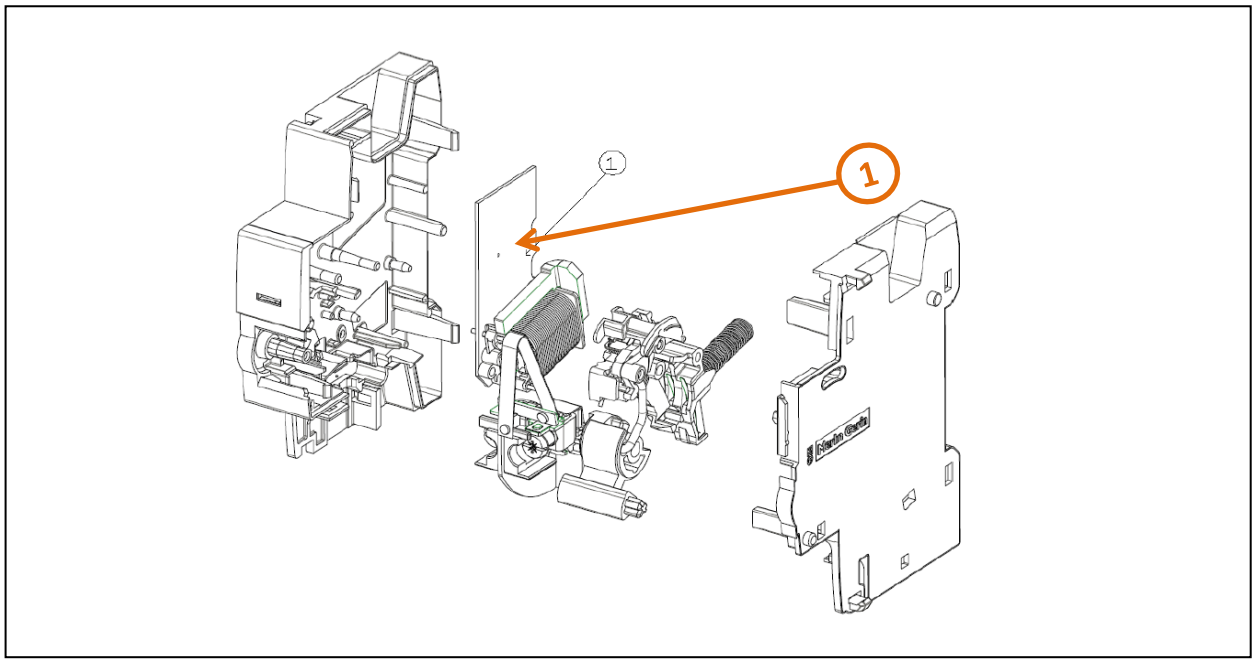

Recommendation	Number on drawing	Component / Material	Weight (in g)	Comment
To be depolluted	1	Electronic Board (Communication) > 10cm²	11.35	

Product description

Manufacturer identification	Schneider Electric Industries SAS
Brand name	Schneider Electric
Product function	Switches off the power supply by opening the breaker with which it is combined, in the event that the phase/neutral voltage is exceeded.
Product reference	A9A26500
Additional similar product references	A9A26500
Total representative product mass	77.1 g
Representative product dimensions	86.2mm*72.4mm*17.7mm
Date of information release	10/2018

Additional information

Legal information	This product family is in the scope of European Union directive 2012/19/EU on Waste Electrical and Electronic Equipment (WEEE). The product family must be disposed according to the legislation of the country. This document is intended for use by end of life recyclers or treatment facilities. It provides the basic information to assure an appropriate end of life treatment for the components and materials of the product.	
Recyclability potential	**35%**	Based on “ECO’DEEE recyclability and recoverability calculation method” (version V1, 20 Sep. 2008 presented to the French Agency for Environment and Energy Management: ADEME).

Schneider Electric Industries SAS

Country Customer Care Center
http://www.schneider-electric.com/contact

35, rue Joseph Monier

CS 30323

F- 92506 Rueil Malmaison Cedex

RCS Nanterre 954 503 439
Capital social 896 313 776 €

www.schneider-electric.com

Published by Schneider Electric

ENVEOLI1304030_V2

© 2017 - Schneider Electric – All rights reserved

10/2018