EMERGENCY STOP ROPE PULL SWITCH

User Instructions

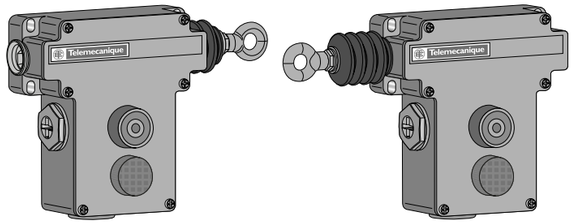

Note: you can download the complete user guide in different languages from our website at: www.tesensors.com

User Guide N°: S1A69561

en fr es de nl da
fi no pt el zh ru

We welcome your comments about this document. You can reach us by e-mail at: customer-support@tesensors.com

Schneider Electric Industries SAS
Head Office
35, rue Joseph Monier - CS 30323
F92500 Rueil-Malmaison Cedex
France
www.schneider-electric.com

http://qr.tesensors.com/XY0006

Accessories

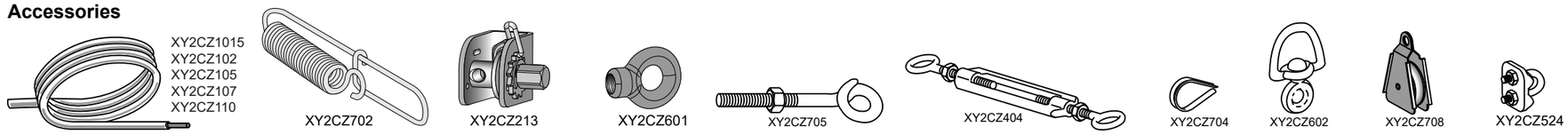

Fig. 1 Installation

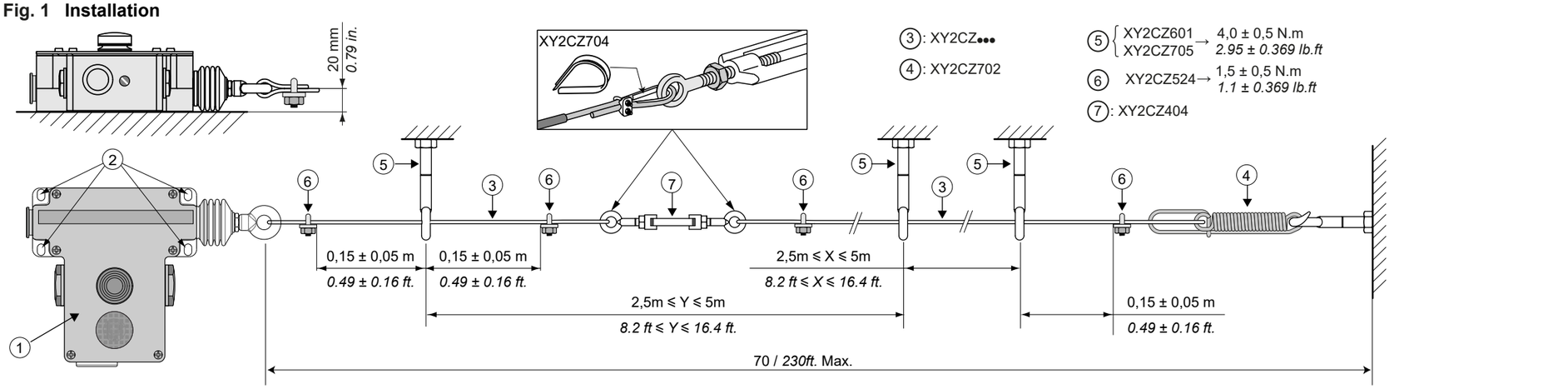

Cable installation with déflection (angles)

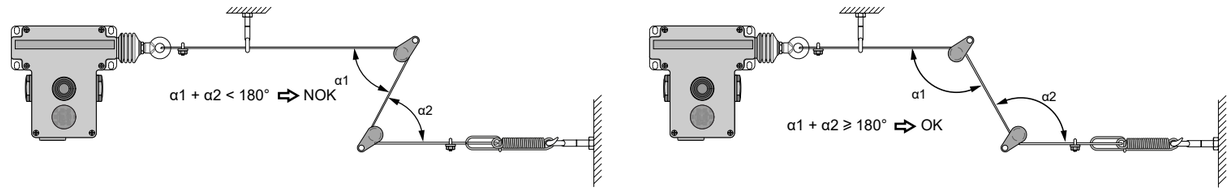

Fig. 2

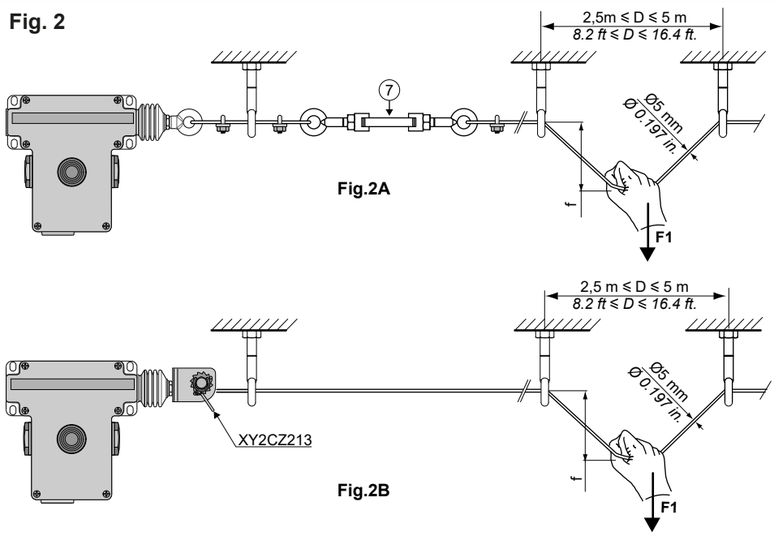

Fig.2A

Fig.2B

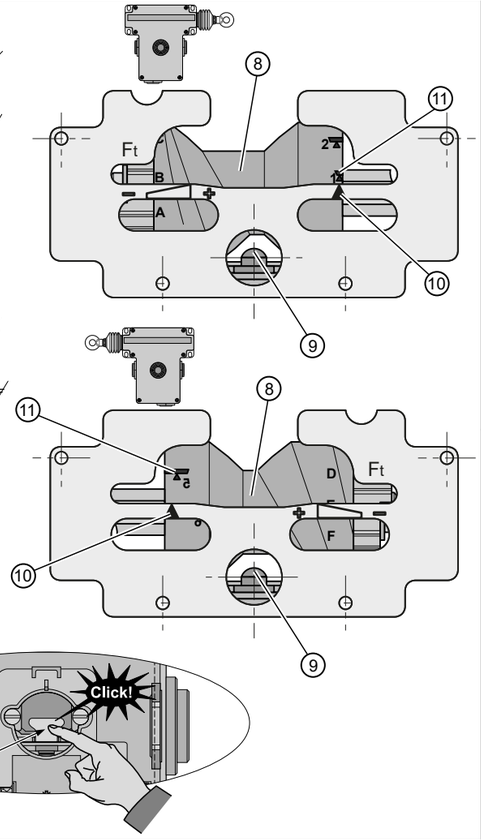

IEC 60947-5-5					
Landmark	Standard force		Low force		Cam position
	F1 (daN)	f (mm/*in.*)	**F1** (daN)	f (mm)	
1	7	260 / *10.2*	4,4	250 / *9.8*	A
2	8,4	280 / *11*	4,8	270 / *10.6*	B
3	9,6	300 / *11.8*	5,1	270 / *10.6*	C
4	10,2	320 / *12.6*	5,3	280 / *11*	D
5	12,3	340 / *13.4*	6	290 / *11*	E
6	13,3	360 / *14.2*	6,6	320 / *12.6*	F
Note: A given force corresponds to a single deflection and a single cam position					

Fig.3

Permissible temperature variation according to cable length for a given cam position.

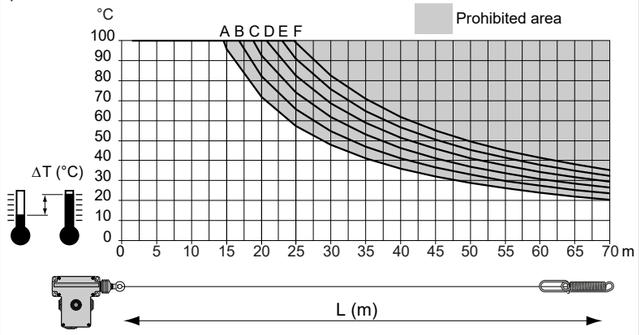

Fig. 4a

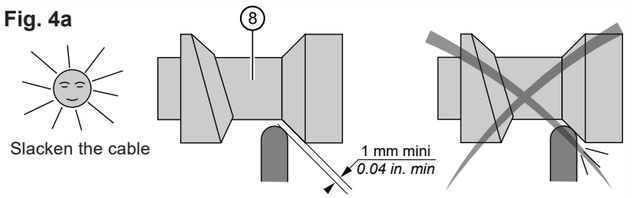

Fig. 4b

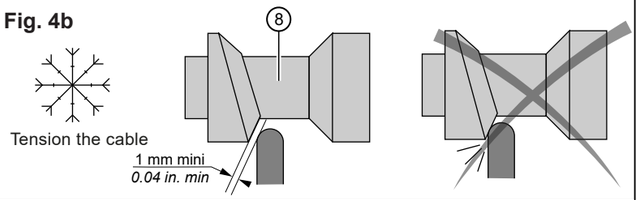

Fig.5

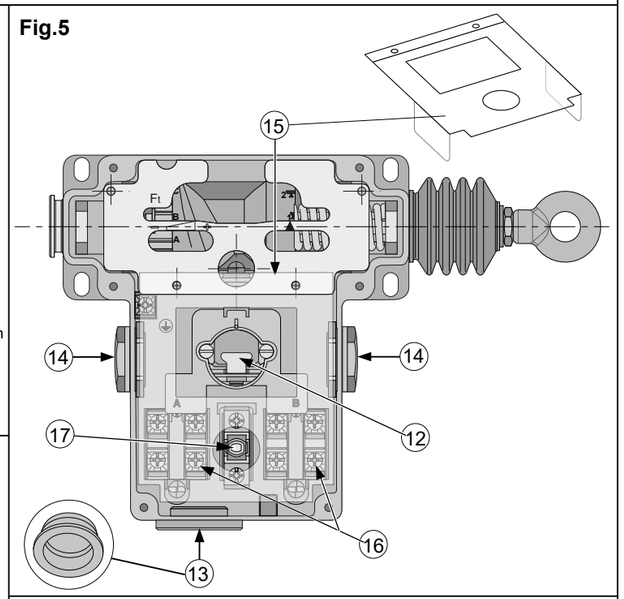

Fig. 6

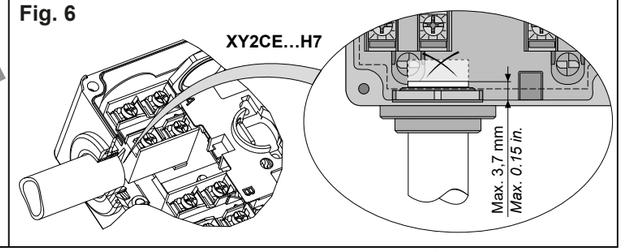

Fig. 7 Setting with the cable tensioner: XY2CZ213

Fig.7A

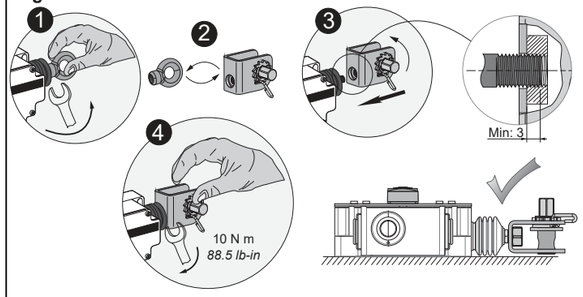

Fig.7B

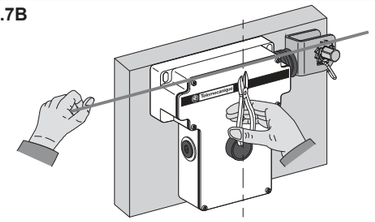

Fig.7C

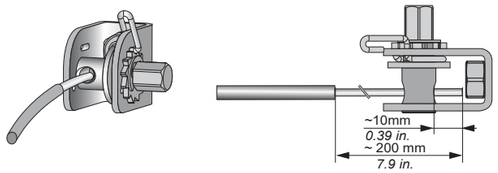

Fig.7D

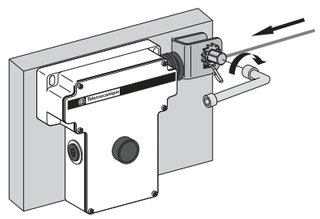

Fig.7E

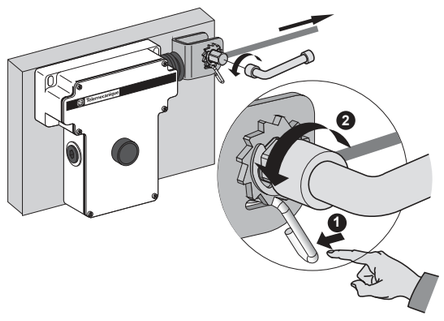

Fig. 8

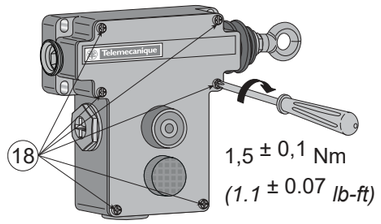

Fig.9

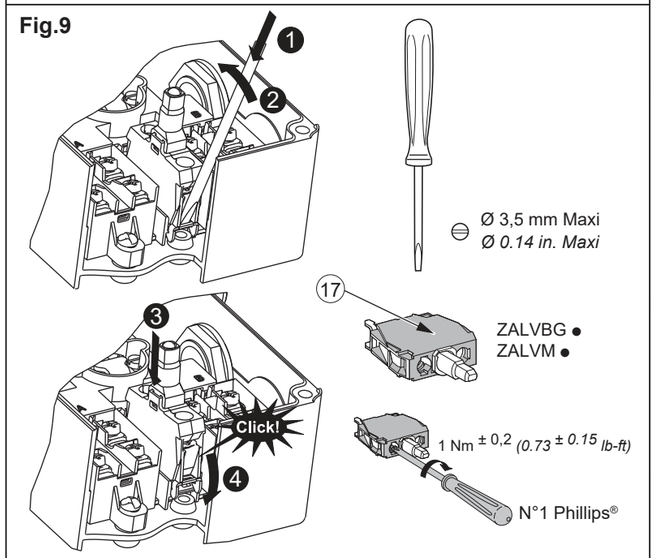

Fig.10

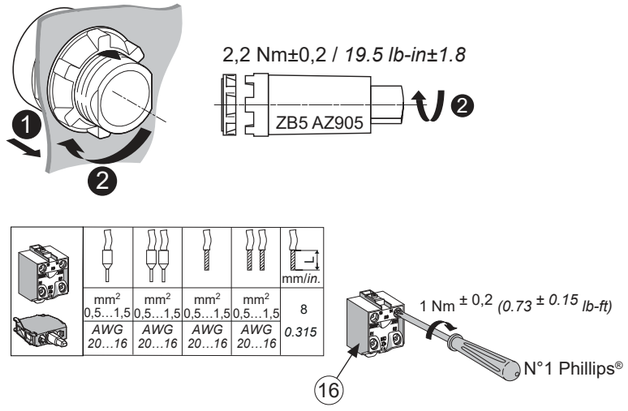

EMERGENCY STOP ROPE PULL SWITCHES

MECHANICAL ENDURANCE: 60,000 operating cycles

⚠ DANGER

RISK OF PHYSICAL INJURY
- Inspect the cable in its entirety to identify the reason for the emergency stop order before restarting.
- Use only Telemecanique Sensors accessories and Telemecanique Sensors Ø 5mm cable.
- Mount the product to its support using 4 screws.
- Use only NC contacts for the emergency stop safety function
- The use of a end-spring XY2CZ702 is mandatory.
- Place the cable guides or pulleys no less than 2,5 meters (*8.2 ft.*) and no more than 5 meters (*16.4 ft.*) apart from each other.
- Remove all objects placed on or masking the cable.
- Ensure that the cable is free to move.
- Ensure that the cable is accessible along the entire traction zone.
- Check that none of the device components is deformed by an electrical cable once the cover is closed.
- Check that the cover is securely closed.
- Check that the device, cable and accessories are securely mounted in place.
- Check the product installation, setting and functioning based on the information provided in this instruction manual.
- Check the proper working of the XY2CE, cables and accessories after installation and after any work is done on the installation.

Failure to follow these instructions will result in death or serious injury.

⚠⚠ DANGER

RISK OF ELECTRICAL SHOCK, EXPLOSION OR ARC FLASH
- Before any intervention, switch off the power supply of the equipment acting as the support.
- Before any work is done, switch off the power supply of the device.
- Take care not to damage the parts of the support that are normally powered.
- Visually inspect the good condition of the product.
- Use appropriate personal protective equipment (PPE) and follow the recommended instructions for electrical environments. (see NFPA 70E).
- Always use an appropriate electrical measuring device to confirm that the entire installation is powered down.
- Use an IP66 cable gland.
- Protect the installation against power surges.

Failure to follow these instructions will result in death or serious injury.

⚠ WARNING

RISK OF PHYSICAL INJURY
- Secure the cable traction zone.
- Do not pull on the cable while adjusting cable tightness.
- Check the tightness of parts such as bellows, gaskets, push button, pilot light, etc.
- Ensure that the product is anchored along the same axis as the cable.
- Configure the device based on the ambient temperature.
- Ensure that the reset button zone remains accessible.
- Remove the cable before dismantling the XY2CE.

Failure to follow these instructions can result in death, serious injury, or equipment damage.

INSTALLATION (fig. 1)

1. Mount the device ① to a rigid support using 4 M6 cylindrical head screws through holes ② (tightening torque = $4^{\pm 0,5}$ N.m / $2.95^{\pm 0.37}$ *lb.ft*).
2. Securely fasten the cable guides ⑤ to rigid elements in compliance with the specified distance.
3. Attach the end springs ④ to a rigid element.
4. Connect the cables ③ to the end spring ④ using a cable clamp ⑥.
5. Pass the cables ③ through all the cable guides ⑤.
6. Connect the cables ③ to the product ①.

6a. Turnbuckle use **(fig. 1 and 2A)**
1 - Connect the cables ③ to the turnbuckle ⑦ using a cable clamp ⑥.
2 - Connect the turnbuckle ⑦ to the device ① with a portion of cable ③ by passing through the cable guides ⑤ and using cable clamps ⑥.
3 - Tighten the cables ③ by turning the turnbuckles ⑦.

6b. Tensioner use **(fig. 2B and 7)**
1 - Unscrew the front rings XY2CZ501 and replace them with the tensioner XY2CZ213 **(fig. 7A).**
2 - Cut the cable at the center axis of the device **(fig. 7B).**
3 - Strip the cable 200 mm / *7.87 in.* and pass it into the tensioner **(fig. 7C).**
4 - Tighten the cables ③ by turning the tensioner **(fig. 7D).**
5 - If necessary, untighten the cables **(fig. 7E).**

NOTE :
- The list of accessories and spring can be found in the Telemecanique Sensors catalog. A support or element may be described as "rigid" if it is capable of supporting a load of 2,000 N in all directions of stress.
- Emergency stop rope pull switches with silicone bellows and booted reset push button (XY2CE [1/2/5/6] C2...⊠and XY2CE [1/2/5/6] E2...) are designed for switching in a maximum operating temperature range of -40°C to 70°C (*-40°F to 158°F*). The emergency stop rope pull switch is only one component of the entire installation, the proper operation of the overall equipment must be checked regularly (see maintenance section). In case of particularly harsh environmental conditions, additional protection devices shall be implemented.

● Setting

1. Remove the cover from the device ① by unscrewing the six screws ⑱.
2. Use the turnbuckle ⑦ or the tensioner XY2CZ213 to tighten the cable ③ until it is aligned with the index ⑪ opposite point ⑩.
3. Rotate the cam ⑧ to position it where required, based on the maximum allowable temperature difference in operation (fig. 3).
4. Use the turnbuckle ⑦ or the tensioner XY2CZ213 to reajust the position of the index ⑪.
5. Arm the device by pressing the switch ⑫ : you should hear a "click".
6. Trip the device by pulling the cable ③.
7. Repeat the steps 5 and 6 until the installation is stable.
8. Check the position of the index ⑪ and repeat the steps 4 to 8 if required.
9. Mount the cover onto the device ① using the six screws ⑱ (tightening torque = $1,5^{\pm 0,1}$ Nm / $1.1^{\pm 0.07}$ *lb.ft*).

NOTE: You can compensate for expansion/contraction of the cable by adjusting the configuration to take account of temperature variations:
- Fig.4a: anticipation of a fall in temperature,
- Fig.4b: anticipation of a rise in temperature

● Wiring (fig. 10)

1. Remove the cover from the device ① by unscrewing the 6 screws ⑱.
2. Remove the cap ⑬ or unscrew the blanking plug ⑭ depending on the desired point of entry
3. Mount the cable gland (not supplied).
4. If required, re-mount the blanking plug ⑭ and its nut into the empty hole (tightening torque = $1^{\pm 0,1}$ Nm / $0.73^{\pm 0.07}$ *lb.ft*).
5. Lift the protective sheet ⑮ without damaging it.
6. Connect the electrical cables to the yoke screw terminals ⑯ (tightening torque = $1^{\pm 0,2}$ Nm / $0.73^{\pm 0.15}$ *lb.ft*).
7. Check that there are no cables passing through the reset switch area ⑫.
8. Carefully put back in place the protective sheet ⑮.
9. Mount the cover onto the device ① using the 6 screws ⑱ (tightening torque = $1,5^{\pm 0,1}$ Nm / $1.1^{\pm 0.07}$ *lb.ft*).

NOTE: Version XY2CE .... H7 (rigid tube connection): see **fig. 11**.

● Maintenance

- The proper functioning of the XY2CE and its operating line must be checked on a regular basis based on the level of security required by the application (e.g. number of operations, level of environmental pollution, etc.).
- The replacement of the rearming button and/or of the pilot light must comply with the diagram **(fig. 10)**.
- The replacement of the lighting block must comply with the diagram **(fig. 9)**, i.e. operations 1 and 2 for dismantling and operations 3 and 4 for mounting.

NOTE: During regular maintenance, you must check the following:
- The tightening torque of the screws and XY2CE components as well as the other accessories (turnbuckle, cable clamp, cable guide, etc.).
- The good condition of the cable and related components (turnbuckle, cable clamp, cable guide, etc.). The cable sheath can show signs of fair wear and tear but this must not block the moving of the cable in its accessories. If the cable sheath is damaged, change the cable.
- The good condition of the XY2CE bellows. No holes or cracks must be present. If the bellows are worn out, change the XY2CE.
- Product rearming: Pull the cable, check that the installation is stopped and rearm the product.

● Dismantling / Recycling

Dismantle the cable ③ before the XY2CE.

NOTE : The internal mechanism and electrical contact blocks are fitted with springs that may generate flying parts.