Mureva, Thalassa

Catalogue 03/2017

Surface mounted boxes for rough and clamp environments

schneider-electric.com

Life Is On | Schneider Electric

Green Premium™

Endorsing eco-friendly products in the industry

Green Premium™
Product

Green Premium is the only label that allows you to effectively develop and promote an environmental policy whilst preserving your business efficiency. This ecolabel guarantees compliance with up-to-date environmental regulations, but it does more than this.

Over 75% of Schneider Electric manufactured products have been awarded the Green Premium ecolabel

Discover what we mean by green ….

Check your products!

Schneider Electric's Green Premium ecolabel is committed to offering transparency, by disclosing extensive and reliable information related to the environmental impact of its products:

RoHS

Schneider Electric products are subject to RoHS requirements at a worldwide level, even for the many products that are not required to comply with the terms of the regulation. Compliance certificates are available for products that fulfil the criteria of this European initiative, which aims to eliminate hazardous substances.

REACh

Schneider Electric applies the strict REACh regulation on its products at a worldwide level, and discloses extensive information concerning the presence of SVHC (Substances of Very High Concern) in all of these products.

PEP: Product Environmental Profile

Schneider Electric publishes complete set of environmental data, including carbon footprint and energy consumption data for each of the lifecycle phases on all of its products, in compliance with the ISO 14025 PEP ecopassport program. PEP is especially useful for monitoring, controlling, saving energy, and/or reducing carbon emissions.

EoLI: End of Life Instructions

Available at the click of a button, these instructions provide:

- Recyclability rates for Schneider Electric products.
- Guidance to mitigate personnel hazards during the dismantling of products and before recycling operations.
- Parts identification for recycling or for selective treatment, to mitigate environmental hazards/ incompatibility with standard recycling processes.

General content

Presentation 4

A

Mureva boxes 11

Selection guide 12
Characteristics 14
Junction boxes - IP55 16
Accessories 19
Dimensions 23

B

Thalassa boxes 27

Selection guide 28
Characteristics 30
Junction boxes - IP66 31
Accessories 33
Dimensions 41

C

Properties of the plastic materials 45

Mechanical, electrical, physical and fire-resistance properties ... 45
Resistance to chemical agents 46

D

Index 48

E

Mureva & Thalassa boxes: easy to choose, easy to install

A

Sometimes you need electricity where it is quite difficult to install it, like in wet or dusty places, or where electricity has not been planned at all.
The Mureva & Thalassa boxes satisfy any high safety requirement that the business might have, all surface mounted installations can be made irrespective of environment or safety needs.
The boxes can be installed in residential, tertiary or industrial environments.
They are easy to install, they are stable, they are halogen-free and self extinguishing. You can equip them according to your specific needs or buy them as complete junction boxes. With Mureva & Thalassa at hand, no job will be too demanding!

Wide
choice of sizes and uses, wide range of accessories, Eco-designed,

▶ Wherever security and tightness are required

Safety
Class II
double isolation

Watertightness
IP55 - IP66

Robustness
IK07 - IK08

Environment
"Eco-designed"
Check the Product Environmental Profile (PEP) on www.schneider-electric.com

IP55/66 - for rough and damp environments

A

Every rough environment presents an obvious risk that electric installations become exposed to water or dust. The Mureva & Thalassa ranges of Schneider Electric offer a wide range of possibilities to provide safe installations in rough environments. The ease and fast time of installation bring to these ranges their most important advantage.

Where to install

All the environments, indoors as well as outdoors, exposed to water and dust like industry, farms, parking facilities home and professional laundries…

If you want to continue saving time in your installation you must use the Mureva GT conduits

All our Mureva GT conduits are equipped with longitudinal grooves which offer much less frictional resistance than conventional conduits. Studies have shown that the cable installation time can be reduced by up to **55%** and installation efforts by up to **60%**.
Try it out – you can really feel the difference!

Mureva & Thalassa, easy to choose, easy to use

▶ There are inevitably a size that suits you

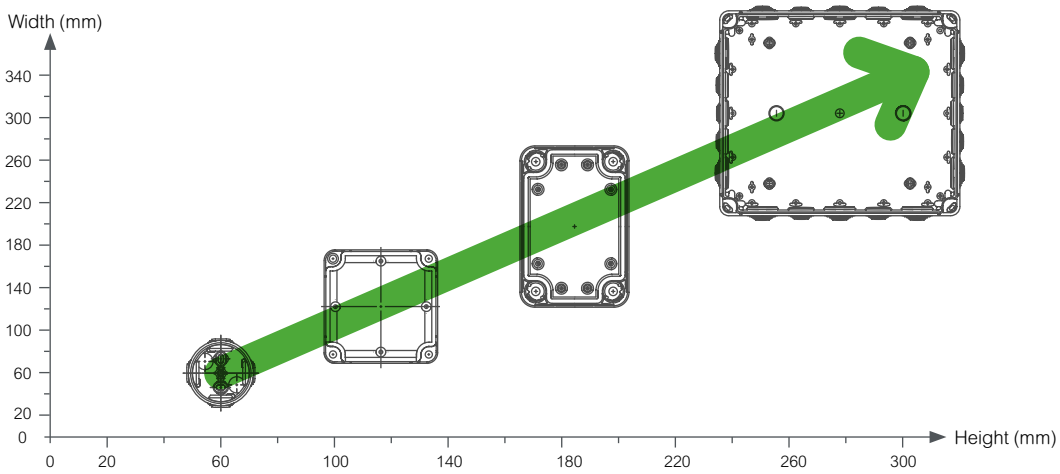

Mureva boxes: easy to choose, easy to Install

A

The Mureva range of surface-mounted boxes is wide and feature-rich. Specifically designed for components requiring sturdiness and watertightness, they are best installed in the tertiary and residential sectors.

The various ways in which they can be mounted and connected make them indispensable for exposed installations. Sealed entries, oblong holes, junction boxes (terminal blocks), reinforced fire-resistant models... a wide variety of possibilities and facilities await you.

These boxes are part of an even wider range of reinforced IP and IK wiring equipment: flush-mounted boxes, switches and power sockets, conduits, enclosures, etc.

Wide choice of sizes and uses, wide range of accessories, Eco-designed,

▶ Your choice of dimensions

Ø60 65x65 80x80 105x65 105x105 150x105 175x150 225x175 275x225 325x275

▶ Your choice of waterproof junction boxes

Boxes with grommets for direct entry

Boxes without entries

Boxes with knock-outs

▶ Specific applications

Security boxes 960°C

Boxes pre-equipped with terminal blocks

Safety Glow wire test: **650 to 960°C**

Safety Class II: **double isolation**

Watertightness **IP55**

IP55 protection – for rough and damp environments

A

Mureva boxes have been developed in a spirit of safety and respect for the planet. Halogen-free, they give off far fewer dangerous combustion gases. And by their very nature, they are less polluting.

Where to install

All the environments, indoors as well as outdoors, exposed to water and dust like Industry, farms, parking facilities …

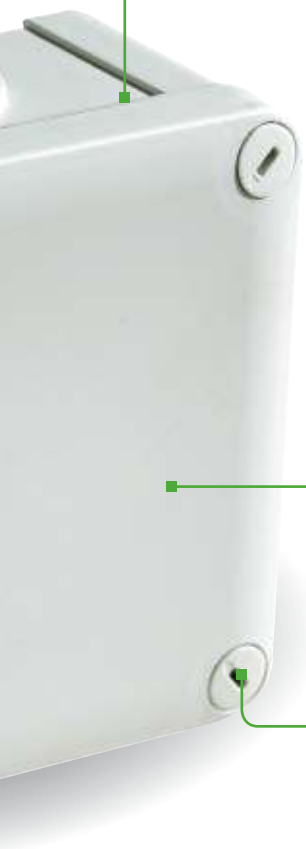

An easy installation

With a threaded plug

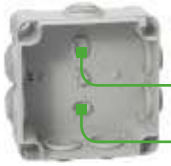

With a standard screw + plug

With a gas or powder nailer.

Outside the waterproof space

- Through the chimneys
- Using fixing lugs.

Exclusive

Two universal fixings:

- for mesh trays
- for cable trays and IPN profiles.

An easy cable entry

System of grommets with direct entry

- Conduits entry after removing a step
- Direct cable entry by pushing.

An easy closing

1/4-turn screws

- Captive screws
- Closing visually identifiable, the arrow of the screw pointing towards the center of the box.

Clipped cover

- Waterproofness assured by the double lips
- Tool necessary to open the box.

Robustness
IK07

Environment
"Eco-designed"

Check the Product Environmental Profile (PEP) on www.schneider-electric.com

Thalassa boxes: robustness and safety

A

Thalassa boxes are the answer to the continuous evolution of the industry. They have been designed to withstand the toughest environmental conditions. Its rounded shape avoids any kind of water and dust accumulation. They are easy to install and machine. The Thalassa boxes meet all the international certifications according to IEC62208 standard. Class II: double insulation. Insulating material, self extinguishing and halogen free.

- ABS & polycarbonate versions.
- Faces lines (without grommets).

▶ This range can be configured according to your needs

Machining

- Make square and circle cut-outs before painting the enclosure (body, cable gland plate, sides) and mounting plates

⊕ Ensures safety and the best protection against rust

⊕ The enclosure is ready to be equipped

Mounting of standard accessories

- Pre-installation of accessories inside or out-side of the enclosure (ex.: mounting plate, plinth, canopy, etc.)

⊕ Enclosure ready to be equipped

Painting

- Change the colour of the complete enclosure (choice of 36 colours)
- Modify the coating of the raw material (ex.: zinc, etc.)

⊕ Industrial painting ensures the best protection

⊕ Totally customized

Packaging

- Just ask how many Thalassa products you want in each chipping box

▶ Insulating industrial boxes

- ABS for conventional applications (IK07) with the usual constraints,
- polycarbonate for enhanced impact resistance (IK08) and for outdoor applications or applications directly exposed to UV,
- polycarbonate certified UL.

▶ Smart

Fixing studs on the cover.

- specific: transparent cover.

Watertightness – IP66 for all ranges

A

Thalassa is not only specifically designed for industrial use and for aggressive tertiary environments.
This range will find a prominent place in the residential sector: cellars, garages, workshops, utility rooms, boiler rooms...
Its reinforced IP and IK products make it ideal for use in places where a high degree of safety, sturdiness and watertightness is required.

Your choice of dimensions

An easy installation

3 methods of fixing the box to its support.

Easy to use

Only one tool is required: a flat screwdriver.

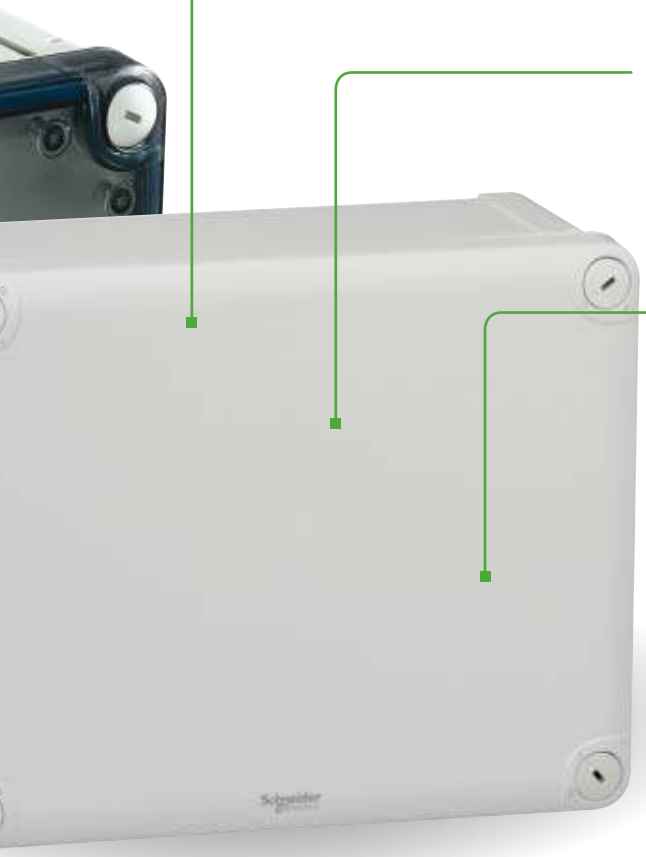

Main application

Electrical distribution
Receive and protect electrical & electronic components and control devices

Junctions

Electronics

Universal

Dedicated applications

Shunting

Industrial automatisms

Watertightness
IP66

Robustness
IK07 - IK08

- Anti-condensation valves available as an accessory, prevent the build-up of moisture inside the box.

The Mureva range, a complete waterproof system

A

A well-thought-out system

All these components are created to work together and save you time when designing and installing your facility. Their sturdiness, water resistance and quality make them suitable for installation in harsh environments (dust, humidity, high-traffic areas, etc.).
Without compromising on their stylish appearance.

Mureva Box ▶

A large selection of boxes wherever security and tightness are required

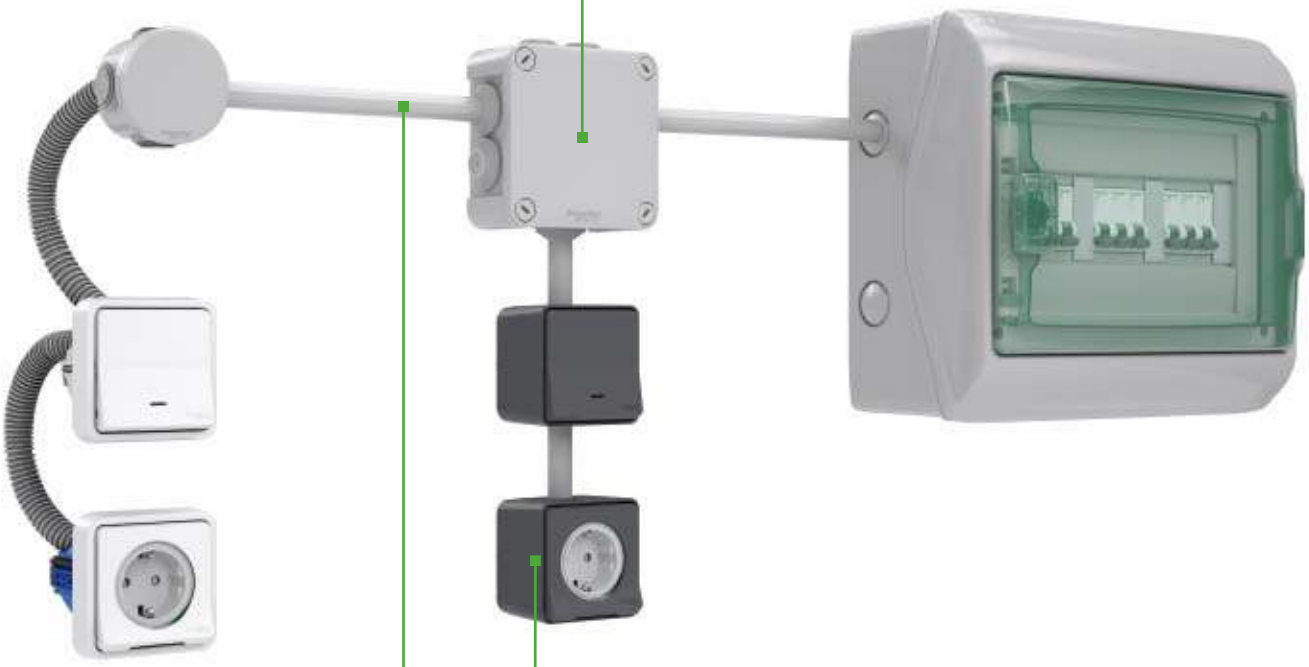

Mureva Fix ▶

Designed to ensure a timeproof quality and security in the fixation

◀ Mureva Styl

Designed to be installed effortlessly, thanks to its intuitive and intelligent fitting design

Mureva Tube ▶

Designed to be bent without breaking, to ensure a perfectly aligned channel

Mureva contents

Mureva boxes B-12
Selection guide B-12
Characteristics B-14
Junction boxes - IP55 ..... B-16
Accessories B-19
Dimensions B-23

Mureva boxes
Selection guide

Boxes with knock-outs IP55 - IK07

E101244d

AC_01356

Overall external dimensions			Overall internal dimensions			Number of knock-outs					Standard	For security circuits
(mm)			(mm)			(Ø min. - max.)					Grey RAL 7035	Red RAL 3000
Height	Width	Depth	Height	Width	Depth	12/16	16/20	20/25	25/32	32/40	650°C	960°C
Cover clipped-on												
74	74	52	65	65	45	-	4	-	-	-	ENN05082	-
89	89	52	80	80	45	-	4	-	-	-	ENN05084	ENN05174
116	74	62	105	65	55	-	6	-	-	-	ENN05083	-

B

E101246d

AC_01355

Overall external dimensions			Overall internal dimensions			Number of knock-outs					Standard	For security circuits
(mm)			(mm)			(Ø min. - max.)					Grey RAL 7035	Red RAL 3000
Height	Width	Depth	Height	Width	Depth	12/16	16/20	20/25	25/32	32/40	750°C	960°C
Cover quarter-turn screws												
115	115	62	105	105	55	-	7	-	-	-	ENN05085	ENN05175
164	121	87	150	105	80	8	4	2	-	-	ENN05087	ENN05177
193	164	88	175	150	80	8	-	4	4	-	ENN05090	-
241	194	108	225	175	100	-	-	6	-	6	ENN05093	-
292	242	128	275	225	120	-	-	16	-	8	ENN05097	-
342	292	129	325	275	120	-	-	24	-	8	ENN05099	-

Boxes without entries IP55 - IK07

E101242d

Overall external dimensions			Overall internal dimensions			Standard	
(mm)			(mm)			Grey RAL 7035	White RAL 9003
Height	Width	Depth	Height	Width	Depth	650°C	
Cover clipped-on							
89	89	52	80	80	45	ENN05044	IMT05064

GY9E0019

Overall external dimensions			Overall internal dimensions			Standard	
(mm)			(mm)			Grey RAL 7035	White RAL 9003
Height	Width	Depth	Height	Width	Depth	750°C	
Cover quarter-turn screws							
115	115	62	105	105	55	ENN05045	IMT05065
164	121	87	150	105	80	ENN05047	-
193	164	88	175	150	80	ENN05050	-
241	194	108	225	175	100	ENN05053	-
292	242	128	275	225	120	ENN05057	-
342	292	129	325	275	120	ENN05059	-

Mureva boxes
Selection guide

Boxes with grommets IP55 - IK07

P122337

PB500090

P80890

Overall external dimensions			Overall internal dimensions			Number of grommets				Standard		With terminal blocks	For security circuits	
(mm)			(mm)			(Ø min. - max.)				Grey RAL 7035	White RAL 9003	Grey RAL 7035	Red RAL 3000	Grey RAL 7035
Height	Width	Depth	Height	Width	Depth	4/20	4/25	4/32	4/40	650°C		650°C	960°C	
Cover clipped-on														
Ø	72	50	Ø	60	40	4	-	-	-	ENN05001	IMT05021	-	-	-
82	82	52	65	65	45	4	-	-	-	ENN05002	IMT05022	-	-	-
						7	-	-	-	ENN05032	IMT05072	-	-	-
97	97	52	80	80	45	7	-	-	-	ENN05004	IMT05024	ENN05204	ENN05164	ENN05264
124	82	62	105	65	55	8	-	-	-	ENN05003	IMT05023	-	-	-

PB500091-32

AC_01335

Overall external dimensions			Overall internal dimensions			Number of grommets				Standard		With terminal blocks	For security circuits	
(mm)			(mm)			(Ø min. - max.)				Grey RAL 7035	White RAL 9003	Grey RAL 7035	Red RAL 3000	Grey RAL 7035
Height	Width	Depth	Height	Width	Depth	4/20	4/25	4/32	4/40	750°C		750°C	960°C	
Cover quarter-turn screws														
128	128	62	105	105	55	-	7	-	-	ENN05005	IMT05025	ENN05205	ENN05165	ENN05265
172	129	87	150	105	80	-	10	-	-	ENN05007	-	-	ENN05167	ENN05267
200	176	88	175	150	80	-	10	2	-	ENN05010	-	-	-	-
251	204	108	225	175	100	-	4	8	-	ENN05013	-	-	-	-
302	255	128	275	225	120	-	-	16	4	ENN05017	-	-	-	-
355	305	129	325	275	120	-	-	10	10	ENN05019	-	-	-	-

B

Mureva boxes
Characteristics

Characteristics	Boxes with grommets	Boxes with knock-outs	Boxes without entries	Boxes security circuits
	The Mureva BOX range of junction boxes is available in ten sizes, varying from the small round Ø 60 x 40 mm to the spacy rectangular 325 x 275 x 120 mm ■ The boxes come in one of three entry versions: □ with grommets □ with knock-outs □ without entries (solid faces) Versions with extended temperature resistance (glow wire test 960°C) are available All boxes in sizes up to 105 x 65 x 55 mm have clipped-on covers, while bigger ones use four quarter-turn screws All boxes are packed in plastic film, enabling fast recognition of the product Small boxes (up to size 105 x 105 x 55 mm) are packed in fives, whereas large boxes are packed by the piece The products respect environmental needs, which is assured by halogen-free plastic materials (except slightly halogenated red boxes) and the use of eco-design rules (product environmental profile)			
Material, box and cover	■ The junction boxes with grommets are available in all ten sizes ■ The grommet diameters are 20, 25, 32 or 40 mm, depending on the box	■ The junction boxes with knock-outs are available in nine sizes (no small round box) with ISO diameters from M12 up to M40, depending on the box ■ Metric knock-outs usually have two consecutive ISO sizes in each location, e.g. ISO 16/20 or ISO 20/25, etc ■ The exception is for small boxes (up to 80 x 80 x 45 mm), which only have a single knock-out ISO 20 in each location	■ The junction boxes with solid walls are available in seven sizes (from 80 x 80 x 45 mm to 325 x 275 x 120 mm)	The junction boxes for security circuits are available in three sizes (80 x 80 x 45 mm, 105 x 105 x 55 and 150 x 105 x 80 mm) with two entry versions: ■ **with grommets**: the grommet diameters are 20 or 25 mm, depending on the box ■ **with knock-outs:** the knock-out diameters are M12, M16, M20 or M25, depending on the box. Metric knock-outs have two consecutive ISO sizes in each location, i.e. ISO 12/16, 16/20 and 20/25
	Boxes ≤ 105 x 105 ■ Halogen-free ■ Insulating material: □ body made of ABS □ cover made of PP **Large boxes** ■ Halogen-free ■ Insulating material: body and cover made of PP **Red boxes** ■ Slightly halogenated ■ Insulating material: body and cover made of PP (960°C glow wire test)			
	Operating temperature ■ - 25°C...+ 40°C			
	Flame resistance ■ 650°C for boxes < 105 x 105 mm ■ 750°C for boxes ≥ 105 x 105 mm ■ 960°C for red and grey boxes			
Colour	■ Standard grey series: grey RAL 7035 ■ Standard white series: white RAL 9003 ■ Red series: red RAL 3000			
Ingress protection rating	IP55 to standard IEC 60529 Class II to IEC 536 assured by protection caps (supplied) and fixing screws			
Mechanical protection rating	IK07 (2J) according to EN50102			
Standards	Conforming to standard EN 60670			
Certifications	CE			
Installation	**Fixing the box** ■ Boxes up to 105 x 105: □ single fixing central point (e.g. using powder nailer) □ through box bottom, using two oblong knock-out holes (also by using gas nailer) ■ Large boxes: □ outside usable volume, using four chimneys at box corners □ through box bottom, using two or four (depending on size) oblong knock-out holes			
Benefits	■ Wide choice: □ wide dimensional range with 10 sizes □ three types of entries (walls) to suit all installation methods □ boxes for specific applications (security circuits, pre-equipped with terminals) ■ Safety: IP range also assured by gaskets and protection caps (supplied) ■ Ease of installation: □ quick cover closing, either by clipping-in (small boxes) or by captive quarter-turn screws assuring IP55 protection □ captive cover, with a link between body and cover, facilitating installation □ the four "feet" of the cover of boxes 105 x 105 x 55 and larger ensure rigidity and perfect stability during machining operations (e.g. customisation) □ several solutions for box fixing: - central point (small boxes) - oblong holes - chimneys outside the IP zone (large boxes)			
Product Environmental Profile	Product Environmental Profile documents are available on www.schneider-electric.com			

Mureva boxes
Characteristics

Characteristics	For fixing	For cable entry	For protection	For coupling	For cabling
	P100907	P80928	P80959	P120839	P80954
	Universal fixing for metal beams and cable trays	■ Flexible entries (grommets with diameters 20 - 40 mm) ■ Cable glands and gaskets ■ Multi-cable discs	Various plugs for transport and ventilation	■ Coupling kit to connect two boxes	■ Terminals ■ Support bars and mounting plate for terminal blocks
References*					

* For details, type reference in the search engine of www.schneider-electric.com

B

Mureva boxes

Junction boxes - IP55
650°C, 750°C

B

Junction boxes with grommets

	Dimensions H x L x W (mm)	Type	Colour	Reference	Qty per package
	Junction box with clipped-on cover				
	Surface mounted junction box with grommets and clipped-on cover. Degree of protection IP55, mechanical protection IK07, flame resistance 650°C. Material: ABS (body), PP (cover).				
P120834	Ø 60 x 40	4 grommets Ø 20	Grey RAL 7035	**ENN05001**	5
			White RAL 9003	**IMT05021**	
P120835	65 x 65 x 45	4 grommets Ø 20	Grey RAL 7035	**ENN05002**	5
			White RAL 9003	**IMT05022**	
	65 x 65 x 45	7 grommets Ø 20	Grey RAL 7035	**ENN05032**	5
			White RAL 9003	**IMT05072**	
P120631	80 x 80 x 45	7 grommets Ø 20	Grey RAL 7035	**ENN05004**	5
			White RAL 9003	**IMT05024**	
	80 x 80 x 45	7 grommets Ø 20 and terminal blocks	Grey RAL 7035	**ENN05204**	5
P120625	105 x 65 x 55	8 grommets Ø 20	Grey RAL 7035	**ENN05003**	5
			White RAL 9003	**IMT05023**	
	Junction box with screw-fixed cover				
	Surface mounted junction box with grommets and quarter-turn screw-fixed cover. Degree of protection IP55, mechanical protection IK07, flame resistance 750°C. Material: PP.				
P120623	105 x 105 x 55	7 grommets Ø 25	Grey RAL 7035	**ENN05005**	5
			White RAL 9003	**IMT05025**	
P120610	105 x 105 x 55	7 grommets Ø 25 and terminal blocks	Grey RAL 7035	**ENN05205**	5
	150 x 105 x 80	10 grommets Ø 25	Grey RAL 7035	**ENN05007**	1
	175 x 150 x 80	10 grommets Ø 25 and 2 grommets Ø 32	Grey RAL 7035	**ENN05010**	1
	225 x 175 x 100	4 grommets Ø 25 and 8 grommets Ø 32	Grey RAL 7035	**ENN05013**	1
	275 x 225 x 120	16 grommets Ø 32 and 4 grommets Ø 40	Grey RAL 7035	**ENN05017**	1
	325 x 275 x 120	10 grommets Ø 32 and 10 grommets Ø 40	Grey RAL 7035	**ENN05019**	1

Mureva boxes

Junction boxes - IP55
650°C

Junction boxes with knock-outs

P120627

P120613

P120638

Dimensions H x L x W (mm)	Type	Colour	Reference	Qty per package
Junction box with clipped-on cover				
Surface mounted junction box with metric knock-outs and clipped-on cover. Degree of protection IP55, mechanical protection IK07, flame resistance 650°C. Material: ABS (body), PP (cover).				
65 x 65 x 45	4 knock-outs M16/20	Grey RAL 7035	**ENN05082**	5
80 x 80 x 45	4 knock-outs M16/20	Grey RAL 7035	**ENN05084**	5
105 x 65 x 55	6 knock-outs M16/20	Grey RAL 7035	**ENN05083**	5
Junction box with screw-fixed cover				
Surface mounted junction box with metric knock-outs and quarter-turn screw-fixed cover. Degree of protection IP55, mechanical protection IK07, flame resistance 750°C. Material: PP.				
105 x 105 x 55	7 knock-outs M16/20	Grey RAL 7035	**ENN05085**	5
150 x 105 x 80	8 knock-outs M12/16, 4 x M16/20 and 2 x M20/25	Grey RAL 7035	**ENN05087**	1
175 x 150 x 80	8 knock-outs M12/16, 4 x M20/25 and 4 x M25/32	Grey RAL 7035	**ENN05090**	1
225 x 175 x 100	6 knock-outs M20/25 and 6 x M32/40	Grey RAL 7035	**ENN05093**	1
275 x 225 x 120	16 knock-outs M20/25 and 8 x M32/40	Grey RAL 7035	**ENN05097**	1
325 x 275 x 120	24 knock-outs M20/25 and 8 x M32/40	Grey RAL 7035	**ENN05099**	1

B

Junction boxes without entries

P120618

P120611

Dimensions H x L x W (mm)	Type	Colour	Reference	Qty per package
Junction box with clipped-on cover				
Surface mounted junction box with solid walls and clipped-on cover, without entries. Degree of protection IP55, mechanical protection IK07, flame resistance 650°C. Material: ABS (body), PP (cover).				
80 x 80 x 45	Junction box without entries	Grey RAL 7035	**ENN05044**	5
		White RAL 9003	**IMT05064**	5
Junction box with screw-fixed cover				
Surface mounted junction box with solid walls and quarter-turn screw-fixed cover, without entries. Degree of protection IP55, mechanical protection IK07, flame resistance 750°C Material: PP.				
105 x 105 x 55	Junction box without entries	Grey RAL 7035	**ENN05045**	5
		White RAL 9003	**IMT05065**	5
150 x 105 x 80	Junction box without entries	Grey RAL 7035	**ENN05047**	1
175 x 150 x 80	Junction box without entries	Grey RAL 7035	**ENN05050**	1
225 x 175 x 100	Junction box without entries	Grey RAL 7035	**ENN05053**	1
275 x 225 x 120	Junction box without entries	Grey RAL 7035	**ENN05057**	1
325 x 275 x 120	Junction box without entries	Grey RAL 7035	**ENN05059**	1

Mureva boxes

Junction boxes - IP55
960°C

B

Security boxes with grommets

Dimensions H x L x W (mm)	Type	Colour	Reference	Qty per package
Junction box for security circuits, with clipped-on cover				
Surface mounted junction box for security circuits, with grommets and clipped-on cover. Internal dimensions, see below. Degree of protection IP55, mechanical protection IK07, flame resistance 960°C. Material: PP.				
80 x 80 x 45	7 grommets Ø 20 mm	Red RAL 3000	**ENN05164**	5
		Grey RAL 7035	**ENN05264**	
Junction box for security circuits, with screw-fixed cover				
Surface mounted junction box for security circuits, with grommets and quarter-turn screw-fixed cover. Degree of protection IP55, mechanical protection IK07, flame resistance 960°C Material: PP.				
105 x 105 x 55	7 grommets Ø 25 mm	Red RAL 3000	**ENN05165**	5
		Grey RAL 7035	**ENN05265**	
150 x 105 x 80	10 grommets Ø 25 mm	Red RAL 3000	**ENN05167**	1
		Grey RAL 7035	**ENN05267**	

P120635

P120626

Security boxes with knock-outs

Junction box for security circuits, with clipped-on cover				
Surface mounted junction box for security circuits, with metric knock-outs and clipped-on cover. Degree of protection IP55, mechanical protection IK07, flame resistance 960°C. Material: PP.				
80 x 80 x 45	4 knock-outs M16/20	Red RAL 3000	**ENN05174**	5
Junction box for security circuits, with screw-fixed cover				
Surface mounted junction box for security circuits, with metric knock-outs and quarter-turn screw-fixed cover. Internal dimensions 105 x 80 x 150 mm. Degree of protection IP55, mechanical protection IK07, flame resistance 960°C. Material: PP.				
105 x 105 x 55	7 knock-outs M16/20	Red RAL 3000	**ENN05175**	5
150 x 105 x 80	8 knock-outs M12/16, 4 x M16/20 and 2 x M20/25	Red RAL 3000	**ENN05177**	1

P120619

P120639

Mureva boxes
Accessories

Accessories for cable entries with strain relief

	ISO diameter	Diameter of cable/ conduit (mm)	No of diameters	Colour	Reference	Qty per package
	Cable glands acc. to ISO standard					
P80928	Cable gland equipped with nut and neoprene seal for one cable. May be used both for threaded and unthreaded holes. The IP68 classification assures complete protection. The temperature range is between -30° and +80°C permanently and up to +150°C intermittently. Material: PA6.					
	M12	Ø 3 / 6.5		Grey	**ISM71501**	20
	M16	Ø 4 / 8		Grey	**ISM71502**	20
	M20	Ø 6 / 12		Grey	**ISM71503**	20
	M25	Ø 11 / 17		Grey	**ISM71504**	10
	M32	Ø 15 / 21		Grey	**ISM71505**	10
	M40	Ø 19 / 28		Grey	**ISM71506**	5
	Security cable gland					
P100805	Security cable gland equipped with nut and seal for one cable, specially adapted to red boxes for safety circuits. May be used in both theaded and unthreaded holes. The IP68 and choice of plastic material ensures complete protection even in hot environments. Incandescent wire tested at 960°C. Material: PA6.					
	M20	Ø 6 / 12		Red RAL 3000	**IMT36150**	20
	Gasket					
P100908	Gasket for cable gland. To be used to ensure a tight fit and complete protection IP68 when mounting cable glands on rough surfaces. Material: EPDM rubber.					
	M12			Black	**IMT36151**	100
	M16			Black	**IMT36152**	100
	M20			Black	**IMT36153**	100
	M25			Black	**IMT36154**	50
	M32			Black	**IMT36155**	50
	M40			Black	**IMT36156**	25
	Multi-cable discs					
P80958	Multi-cable disc for cable glands. To be used for a secure fitting of multiple cables or wires through the same cable gland. Material: EPDM rubber					
	M16		2 x Ø 4	Black	**IMT36157**	40
	M20		3 x Ø 4	Black	**IMT36158**	40
	M25		4 x Ø 5	Black	**IMT36159**	20
	M32		6 x Ø 5	Black	**IMT36160**	20
	Transport plugs					
P80959	Transport plug for cable gland. To be used to seal a cable gland during transport, or when pre-assembling a cable gland for later use. Material: PA6.					
	M16			Black	**IMT36167**	40
	M20			Black	**IMT36168**	40
	M25			Black	**IMT36169**	20
	M32			Black	**IMT36170**	20
	M40			Black	**IMT36171**	10
	Blanking plugs					
P100909	Blanking plug including lock nut. To be used to seal openings in the box during transport, or as a protection for holes intended for later installations. Material: PA6.					
	M12			Grey	**IMT36161**	40
	M16			Grey	**IMT36162**	40
	M20			Grey	**IMT36163**	40
	M25			Grey	**IMT36164**	20
	M32			Grey	**IMT36165**	20
	M40			Grey	**IMT36166**	10

B

Mureva boxes
Accessories

B

Accessories for cable entries without strain relief

	ISO diameter	Diameter of cable / conduit (mm)	Diameter of drilling (mm)	Colour	Reference	Qty per package
	Grommets					
P120649 P120645 P120647	Flexible grommet suitable for unthreaded holes. For fast installation by using either EVA (easy valve access) membrane entry, i.e. direct entry of rigid cables 4-14 mm², or stepped entry, by removing a step of the desired diameter for cables or conduits from 14 mm² to 20, 25, 32 and 40 mm² respectively. Degree of protection IP55. Usage temperature: -25°C...+40°C. Material: SBS					
		4-20	Ø 23	Grey RAL 7035	**ISM71071**	10
				White RAL 9003	**IMT36130**	10
				Dark grey RAL 7004	**ENN08131**	10
		4-25	Ø 29	Grey RAL 7035	**ISM71072**	10
				White RAL 9003	**IMT36131**	10
				Dark grey RAL 7004	**ENN08132**	10
		4-32	Ø 36	Grey RAL 7035	**ISM71073**	10
		4-40	Ø 44	Grey RAL 7035	**ISM71074**	10
	TET grommets					
P60848	Grommet suitable for holes with metric thread and various diameters. IP67 Material: EPDM					
	M12	Ø 3 / 5	Ø 12 - 13	Grey	**IMT36179**	50
	M16	Ø 5 / 7	Ø 16 - 17	Grey	**IMT36180**	50
	M20	Ø 7 / 10	Ø 20 - 21	Grey	**IMT36181**	50
	M25	Ø 10 / 14	Ø 25 - 26	Grey	**IMT36182**	50
	M32	Ø 14 / 20	Ø 32 - 33	Grey	**IMT36183**	50
	M40	Ø 20 / 26	Ø 40 - 41	Grey	**IMT36184**	25
	M50	Ø 26 / 35	Ø 50 -51	Grey	**IMT36185**	25

Accessories for coupling

	Type	For boxes (mm)	For trunking (mm)	Color	Reference	Qty per package
	Coupling kit					
P120839	Coupling M32 to be used to connect two boxes (from 105 x 105 mm) with M32 knock-outs. Enables side-by-side mounting of boxes without reduction of the IP classification Material: Polystyrene					
	Coupling	From 175 x 150 x 80		Grey	**13934**	2

Accessories for fixing

	Universal fixing for IPN profiles and cable trays					
P100907	Universal fixing intended for the fixing of < 105 x 105 mm (internal dimension) junction boxes on IPN profiles from 2 to 12 mm and all types of cable trays Material: Steel					
	Universal fixing			Grey	**ENN08167**	10
	Universal fixing for mesh trays					
P120644	Universal fixing intended for the fixing of < 105 x 105 mm (internal dimension) junction boxes on all types of mesh trays Material: PA6 with 30% glass-fibre					
	Universal fixing			Grey	**ENN08162**	10
	Fixing lugs					
P120661	Fixing lugs intended for mounting of < 105 x 105 mm junction boxes. Fixing is made outside the waterproof space Material:					
	Fixing lugs				**NSYAEFTB**	4

Mureva boxes
Accessories

Accessories for cabling

	Type	Colour	Reference	Qty per package
	Mounting plate			
P120943 P100938	Mounting plate for terminal blocks 2.5 mm² and 6 mm² in boxes 80 x 80 mm and 105 x 105 mm (internal dimensions). The plate enables mounting of eight 2.5 mm² blocks or two 6 mm² blocks or a combination of both. Material: PC.			
	Mounting plate	Anthracite RAL 7016	**ENN08241**	10
	Terminal blocks			
P80938	6-pole push-in terminal block approved for max. 85°C. Max cable area 6 x 2.5 mm². Material: PA.			
	Spring terminal 6 x 2.5 mm²	White	**WDE0000010**	100
P80998	3-pole screw-type terminal block. 440 V. Material: PA.			
	Screw terminal 3 x 6 mm²	Black	**IMT36089**	20
	Earth terminal marked with an earth sign for easy recognition during maintenance operations. Material: CuZn37-R350/H095.			
	Earth terminal	Red	**IMT34009**	10
	4-hole terminal blocks			
	4-holes terminal block to be used together with support bar. Boxes from 175 x 150 mm (internal dimension) accept mounting of a 12 x 2 mm bar that can be used for easy clip-on of up to 8 terminal blocks (depending on sizes of bars and terminal blocks, see selection guide below). Material: Brass bars in a plastic housing.			
PB502585	Phase, 2 x 10 mm² + 2 x 16 mm²	Red	**IMT34003**	10
P80954	Neutral, 2 x 10 mm² + 2 x 16 mm²	Blue	**IMT34005**	5
	Terminal block like the above but supplied including a separate yellow sticker with the earth symbol. When required, the symbol can be stuck to the cover of the terminal block			
P120753	Earth, 2 x 10 mm² + 2 x 16 mm²	Green	**IMT34007**	5
	Support bar			
PB500284 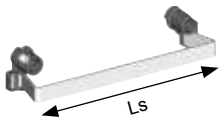	12 x 2 mm support bar for 4-holes terminal blocks. For easy clip-on up to 8 terminal blocks (depending on sizes of bars and terminal blocks, see selection guide below), which frees considerable space for introduction of cables. Including plastic feet and screws. Material: Galvanised steel bar on plastic feet.			
	Support bar Ls = 140 mm	-	**IMT34000**	1
	Support bar Ls = 185 mm	-	**IMT34001**	1
	Support bar Ls = 235 mm	-	**IMT34002**	1

Selection guide

Number of terminal blocks per support bar

	Terminal block 2 x 10 mm² + 2 x 16 mm²	For boxes (mm)
Support bar 140 mm (ref. IMT34000)	4	175 x 150 225 x 175
	-	
Support bar 185 mm (ref. IMT34001)	6	225 x 175 275 x 225
	-	
	3	
Support bar 235 mm (ref. IMT34002)	8	275 x 225 325 x 275
	-	
	3	
	4	

B

Mureva boxes
Accessories

B

Accessories for cabling

P120662

P120663

P120664

Rail lenght (mm)	For boxes height (mm)	Reference for rail type	
		15 x 5 mm	35 x 7.5 mm
97	105	**NSYAMRD11155TB**	**NSYAMRD11357TB**
140	150	**NSYAMRD16155TB**	**NSYAMRD16357TB**
168	175	**NSYAMRD19155TB**	**NSYAMRD19357TB**
214	225	**NSYAMRD24155TB**	**NSYAMRD24357TB**
264	275	**NSYAMRD29155TB**	**NSYAMRD29357TB**
316	325	**NSYAMRD34155TB**	**NSYAMRD34357TB**

Accessories for marking

P120655

P120656

	Color	Reference	Qty per package
Marking tools			
Identification sticker in red colour for marking of 960°C safety junction boxes Material: Paper			
Safety stickers Pilote		**ENN02290**	10
Permanent marker pen for marking on boxes or stickers Material: Plastic			
Permanent marker pen, blue		**ENN08276**	10
Sheet with 60 labels, 70 x 70 mm, for marking of boxes Material: Paper			
Label sheet	White	**ENN08271**	1

Mureva boxes
Dimensions

Box of Ø 60 x 40 mm

Interior with grommets | Side | Rear

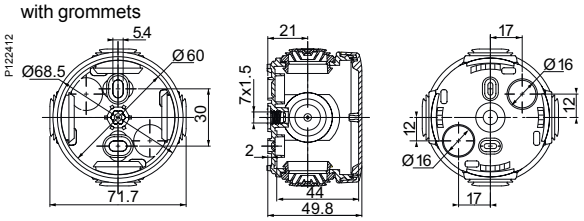

Box of 65 x 65 x 45 mm

Interior with grommets | Interior | Side | Rear

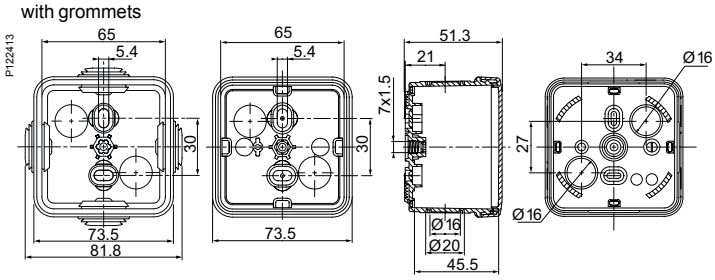

Boîtes 80 x 80 x 45 mm

Interior with grommets | Interior | Side | Rear

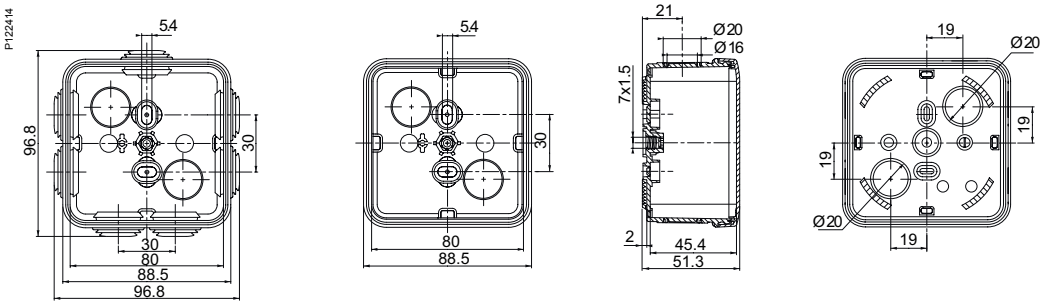

Boîtes 105 x 65 x 55 mm

Interior with grommets | Interior | Side | Rear

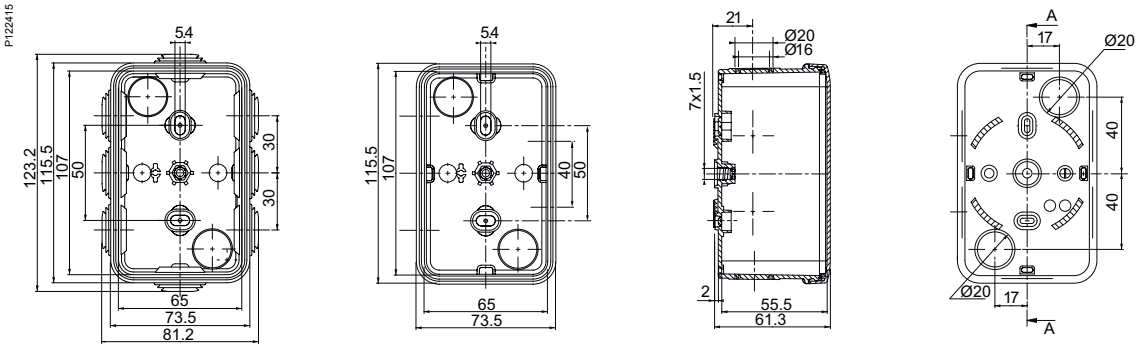

Boîtes 150 x 105 x 80 mm

Interior with grommets | Interior | Side | Rear

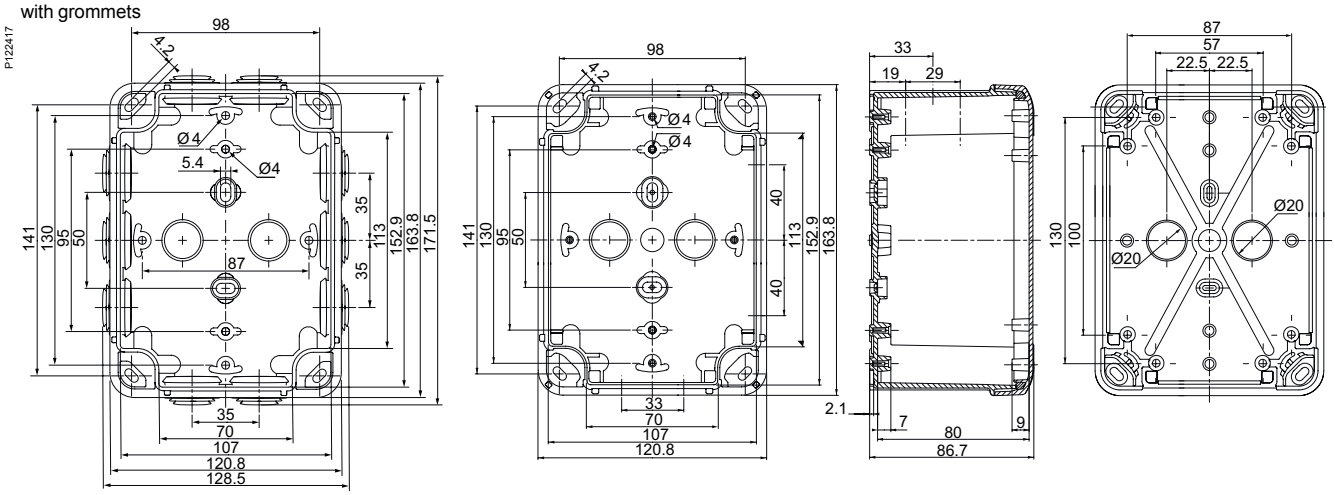

B

Mureva boxes
Dimensions

Boîtes 105 x 105 x 55 mm

Interior with grommets | Interior | Side | Rear

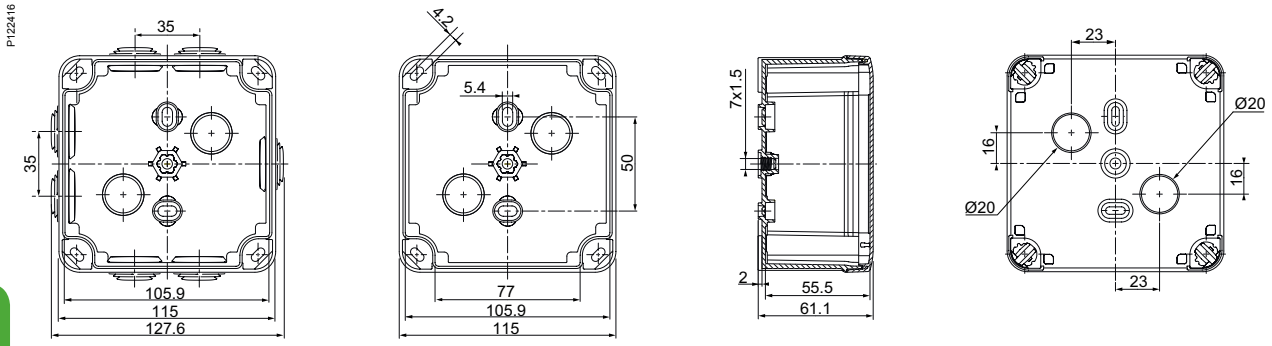

B

Boîtes 175 x 150 x 80 mm

Interior with grommets | Interior | Side | Rear

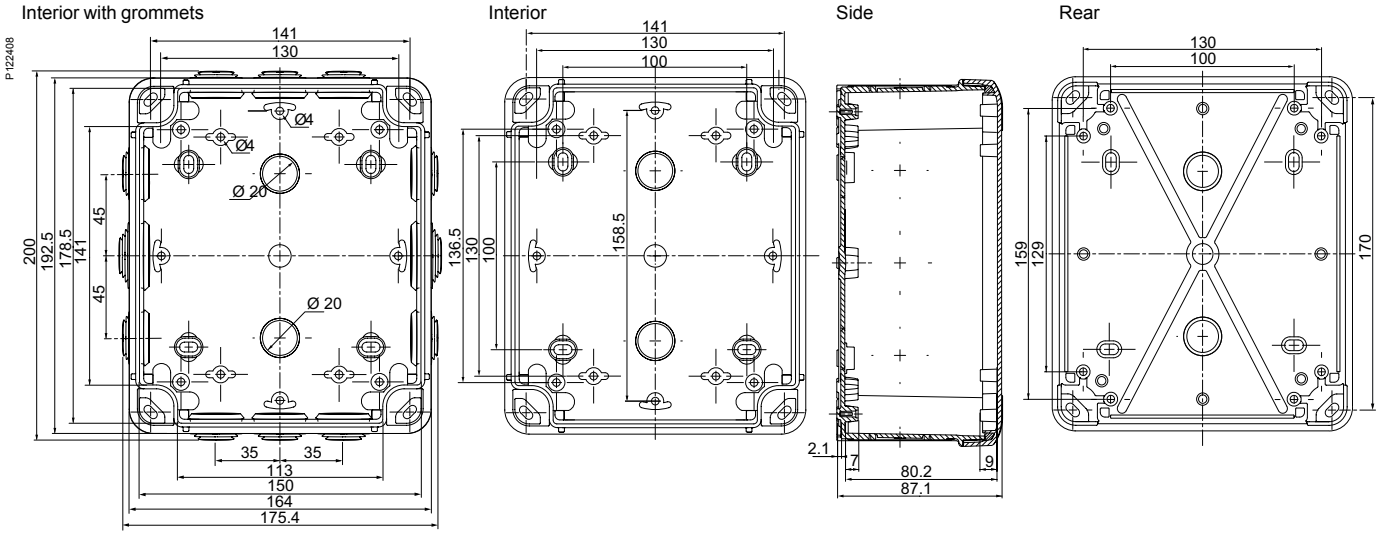

Boîtes 225 x 175 x 100 mm

Interior with grommets | Interior | Side | Rear

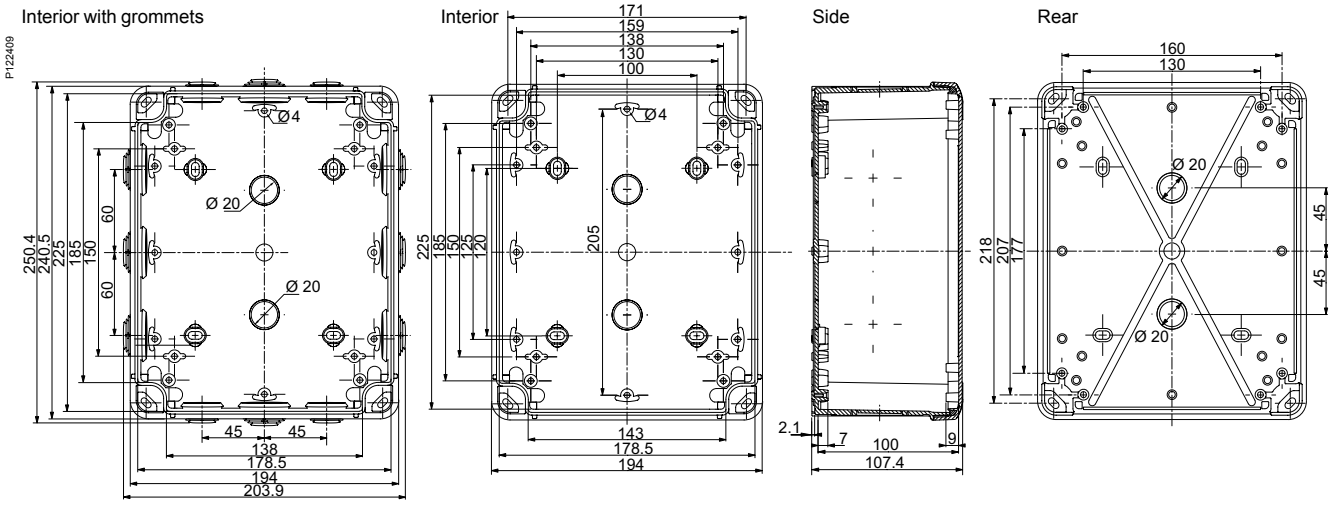

Mureva boxes
Dimensions

Boîtes 275 x 225 x 120 mm

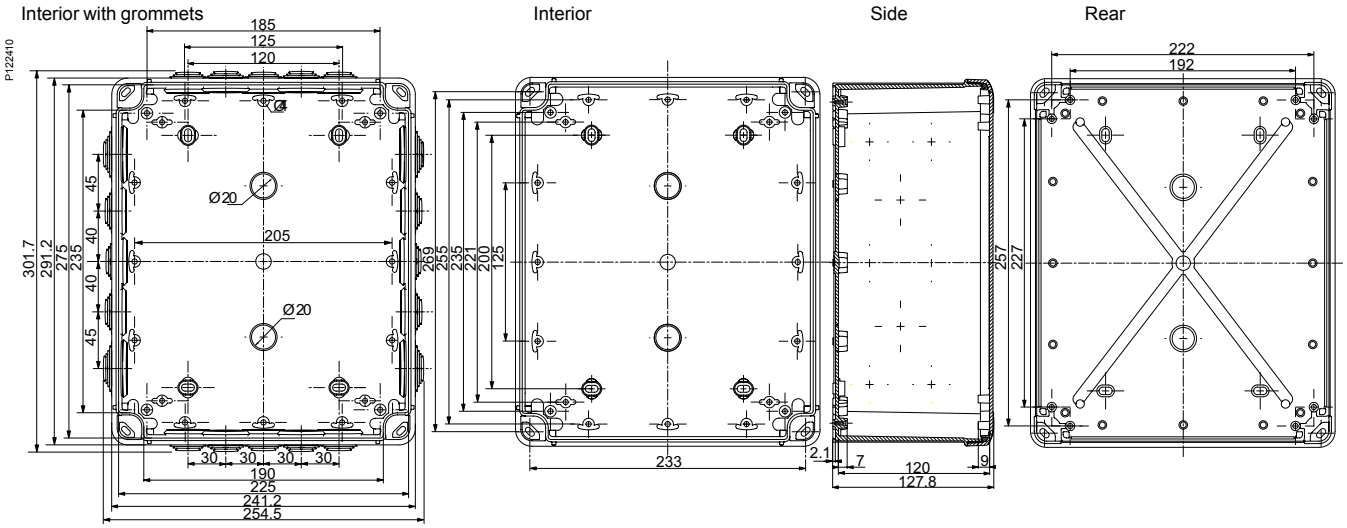

Boîtes 325 x 275 x 120 mm

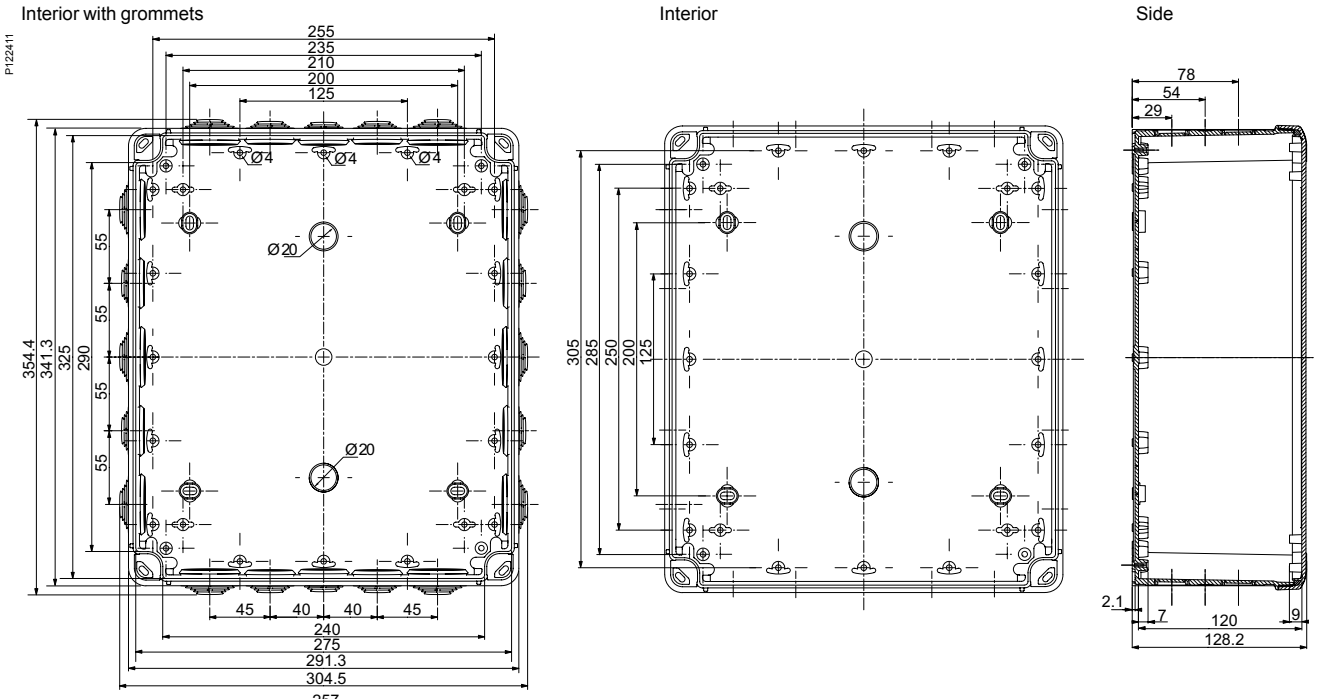

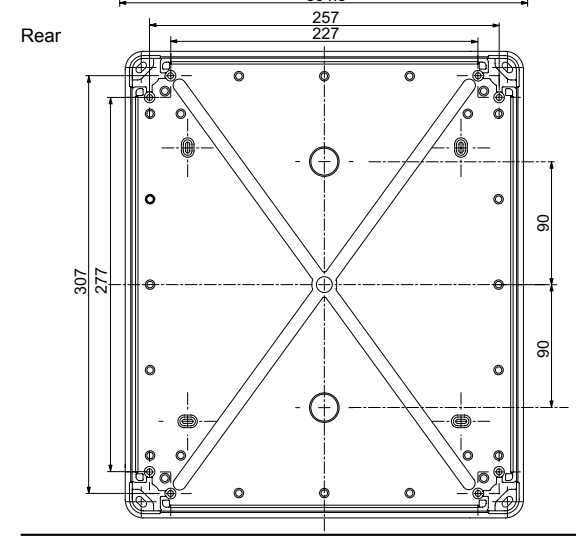

B

B

Thalassa contents

Thalassa boxes C-28
Selection guide C-28
Characteristics C-30
Junction boxes - IP66 ..... C-31
Accessories C-33
Dimensions C-41

Thalassa boxes
Selection guide

Overall external dimensions			Overall internal dimensions			Body	Cover	Minor pack.	Cover screw	Universal boxes with IP66			
(mm)			(mm)			(mm)	(mm)			ABS IP66 IK07		PC-UL IP66 IK08	
Height	Width	Depth	Height	Width	Depth					Opaque cover	Transparent cover	Opaque cover	Transparent cover
74	74	54	65	65	47	37	10	5	Metal	NSYTBS775	-	NSYTBP775	-
89	89	54	80	80	47	37	10	5	Metal	NSYTBS885	-	NSYTBP885	-
116	74	62	105	65	55	45	10	5	Metal	NSYTBS1176	-	NSYTBP1176	-
		94	105	65	85	45	40	3	Metal	NSYTBS1179H	-	-	-
	116	62	105	105	55	45	10	5	Plastic	NSYTBS11116	-	NSYTBP11116	-
		133	105	105	125	45	80	2	Plastic	NSYTBS111113H	-	-	-
138	93	72	125	80	65	45	20	2	Plastic	NSYTBS1397	NSYTBS1397T	NSYTBP1397	NSYTBP1397T
164	121	87	150	105	80	60	20	2	Plastic	NSYTBS16128	NSYTBS16128T	NSYTBP16128	NSYTBP16128T
192	121	87	175	105	80	60	20	2	Plastic	NSYTBS19128	NSYTBS19128T	NSYTBP19128	NSYTBP19128T
		105	175	105	100	60	40	2	Plastic	NSYTBS191210H	NSYTBS191210HT	NSYTBP191210H	NSYTBP191210HT
	164	87	175	150	80	60	20	1	Plastic	NSYTBS19168	NSYTBS19168T	NSYTBP19168	NSYTBP19168T
		105	175	150	100	60	40	1	Plastic	NSYTBS191610H	NSYTBS191610HT	NSYTBP191610H	NSYTBP191610HT
241	194	87	225	175	80	60	20	1	Plastic	NSYTBS24198	NSYTBS24198T	NSYTBP24198	NSYTBP24198T
		107	225	175	100	80	20	1	Plastic	NSYTBS241910	NSYTBS241910T	NSYTBP241910	NSYTBP241910T
		107	225	175	100	60	40	1	Plastic	NSYTBS241910H	NSYTBS241910HT	NSYTBP241910H	NSYTBP241910HT
		127	225	175	120	80	40	1	Plastic	NSYTBS241912H	NSYTBS241912HT	NSYTBP241912H	NSYTBP241912HT
291	241	88	275	225	80	60	20	1	Plastic	NSYTBS29248	NSYTBS29248T	NSYTBP29248	NSYTBP29248T
		128	275	225	120	100	20	1	Plastic	NSYTBS292412	NSYTBS292412T	NSYTBP292412	NSYTBP292412T
		128	275	225	120	60	60	1	Plastic	NSYTBS292412H	NSYTBS292412HT	NSYTBP292412H	NSYTBP292412HT
		168	275	225	160	100	60	1	Plastic	NSYTBS292416H	NSYTBS292416HT	NSYTBP292416H	NSYTBP292416HT
341	291	128	325	275	120	100	20	1	Plastic	NSYTBS342912	NSYTBS342912T	NSYTBP342912	NSYTBP342912T
		168	325	275	160	100	60	1	Plastic	NSYTBS342916H	NSYTBS342916HT	NSYTBP342916H	NSYTBP342916HT

C

Thalassa boxes
Selection guide

Overall external dimensions (mm)			Overall internal dimensions (mm)			Body (mm)	Cover (mm)	Minor pack.	Boxes equipped with IP54 ABS buttons		ABS button boxes, to be equipped		
Height	Width	Depth	Height	Width	Depth				Function	References	No. of holes	Cover	References
74	74	83	-	-	-	-	-	1	Emergency switching off	**XALEK1702** (1)	-	-	-
116	74	62	105	65	55	45	10	5	-	**-**	2	Grey RAL 7035	**XALE2**
		62	105	65	55	45	10	5	-	**-**	3	Grey RAL 7035	**XALE3**
		75	-	-	-	-	-	1	Start / Stop	**XALE2141**	-	-	**-**
		75	-	-	-	-	-	1	Up / Down / Stop	**XALE3255**	-	-	**-**

(1) Ref. ***XALEK1702*** houses an emergency switching off palm button with mechanical locking according to standards IEC 60364-5-53 and 60947-5-5.

Button description

- ■ Emergency switching off function with a red, Ø 40 mm, "turn to unlock" palm button
- ■ Start / Stop function with 2 push buttons
- ■ Up / Down / Stop function with 3 push buttons
- ■ Technical features of the switches:
- □ "NC" switch with positive opening manoeuvre according to IEC 60947-5-1 appendix K
- □ mechanical durability of the emergency switch: 0.1 million cycles
- □ mechanical durability of the "NC" and "NO" switches: 5 million cycles
- □ protection against short circuits: 10 A

Function	Type			
	"NO"	"NC"	"C / O"	Type of push
Emergency switching off	1	1	-	Latching, red
Start / Stop				
Start	1	-	-	Flush, green
Stop	-	1	-	Projecting, red
Up / Down / Stop				
Up	-	-	1	Flush, black
Down	-	-	1	Flush, white
Stop	-	1	-	Projecting, red
	P122402	P122403	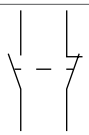 P122404	

C

Thalassa boxes
Characteristics

PB500090 PB500091

PB500250

PB500252

Characteristics	Universal boxes with IP66	Equipped button boxes, in ABS with IP54	ABS boxes for buttons, to be equipped
	■ Boxes that can be coupled (exactly the same dimensions) with kit ref. **13934** ■ Locks from box size of 116 x 116 x 62 mm: □ cover locking by 4 plastic captive screws with coarse thread outside the sealed area □ plumbable lock ■ Locks from box size of 138 x 93 x 72 mm: the standard screws (flat screwdriver) can be replaced with other standardised screws (page 36) ■ The 4 "legs" of the cover ensure its robustness and perfect support during customisation operations ■ Adaptable hinges on all the 20- and 40-mm covers (page 38)		
Material	■ **ABS boxes:** □ glow wire resistance: 650°C according to IEC 60695-2-11 □ usage temperature: -25°C...+60°C □ installation temperature: -15 C...+40°C ■ **Polycarbonate boxes:** □ glow wire resistance: 960°C □ usage temperature: -25°C...+80°C □ installation temperature: -15°C...+60°C	■ **ABS boxes:** □ glow wire resistance: 650°C according to IEC 60695-2-11 □ usage temperature: -25°C...+60°C □ installation temperature: -15 C...+40°C	
Colour	■ Body: grey RAL 7035 ■ Cover: grey RAL 7035 or tinted transparent		
Ingress protection rating	IP66	IP54	-
Mechanical protection rating	**ABS:** IK07 (2J) according to IEC 62262 **Polycarbonate:** IK08 (2J) according to IEC 62262	**ABS:** IK07 (2J) according to IEC 62262	
Standards	IEC 62208		
Certifications	■ IEC 62208 certified by TÜV ■ SEMKO, DEMKO ■ UL 508A: polycarbonate range ■ Product Environmental Profile ■ NEMA 4.4X according to NEMA 250 ■ Class II according to IEC 61140 ■ Self-extinguishing: UL 94-V0	■ IEC 62208 certified by TÜV ■ SEMKO, DEMKO ■ UL 508A: polycarbonate range ■ Product Environmental Profile ■ NEMA 4.4X according to NEMA 250 ■ Class II according to IEC 61140	
Installation	**Fixing the box** ■ Outside the sealed sensitive volume by the 4 chimneys in the corners from box size of 138 x 93 x 72 mm ■ Through the rear of the box by 2 or 4 elongated holes to be perforated ■ With fixing lugs from box size of 116 x 116 x 62 mm (ref. **NSYAEFTB**) **Outdoor installation:** compliant with IEC 62208 regarding type tests specified in §9.12 (resistance to ultra-violet (UV) radiation) and §9.13 (resistance to corrosion). It is always advisable to install a canopy to avoid water stagnation on the upper part of the enclosure **Equipment installation** ■ Studs for fixing the equipment in the body and the cover of the box by means of a Ø 4-mm self-tapping screw (ref. **NSYAMFSTB**, screw Ø 4 x 10 mm with Pozidriv and slotted head) ■ Option of installing rails, plates (page 39) or other types of supports (card, etc.) ■ Spacers and stand-offs to be installed on the studs, for adjusting the height of the equipment		
Other characteristics	■ Thermal dissipation: □ use a suitable calculation method according to IEC 60890 □ anti-condensation valves available as an accessory, prevent the build-up of moisture inside the box	■ Thermal dissipation: □ use a suitable calculation method according to IEC 60890 □ anti-condensation valves available as an accessory, prevent the build-up of moisture inside the box	

C

Thalassa boxes

Junction boxes - IP66
650°C

Junction boxes ABS 650 °C

	Dimensions H x L x W (mm)	Cover colour	Reference	Qty per package
	Metal cover screws			
PB500090	Surface mounted junction box without grommets and cover locking by **metal** 4 screws. Degree of protection IP66, mechanical protection IK07, flame resistance 650°C. Material: ABS			
	65 x 65 x 47	Grey RAL 7035	**NSYTBS775**	5
	80 x 80 x 47	Grey RAL 7035	**NSYTBS885**	5
	105 x 65 x 55	Grey RAL 7035	**NSYTBS1176**	5
	105 x 65 x 85	Grey RAL 7035	**NSYTBS1179H**	3
	Plastic cover screws			
PB500090	Surface mounted junction box without grommets and cover locking by **plastic** 4 screws. Degree of protection IP66, mechanical protection IK07, flame resistance 650°C. Material: ABS			
	105 x 105 x 55	Grey RAL 7035	**NSYTBS11116**	5
	105 x 105 x 125	Grey RAL 7035	**NSYTBS111113H**	2
PB500091	125 x 80 x 65	Grey RAL 7035	**NSYTBS1397**	2
		Transparent	**NSYTBS1397T**	2
	150 x 105 x 80	Grey RAL 7035	**NSYTBS16128**	2
		Transparent	**NSYTBS16128T**	2
	175 x 105 x 80	Grey RAL 7035	**NSYTBS19128**	2
		Transparent	**NSYTBS19128T**	2
	175 x 105 x 100	Grey RAL 7035	**NSYTBS191210H**	2
	175 x 150 x 80	Grey RAL 7035	**NSYTBS19168**	1
		Transparent	**NSYTBS19168T**	1
	175 x 150 x 100	Grey RAL 7035	**NSYTBS191610H**	1
	225 x 175 x 80	Grey RAL 7035	**NSYTBS24198**	1
		Transparent	**NSYTBS24198T**	1
	225 x 175 x 100 (80+20)	Grey RAL 7035	**NSYTBS241910**	1
		Transparent	**NSYTBS241910T**	1
	225 x 175 x 100 (60+40)	Grey RAL 7035	**NSYTBS241910H**	1
	225 x 175 x 120	Grey RAL 7035	**NSYTBS241912H**	1
	275 x 225 x 80	Grey RAL 7035	**NSYTBS29248**	1
		Transparent	**NSYTBS29248T**	1
	275 x 225 x 120 (100+20)	Grey RAL 7035	**NSYTBS292412**	1
		Transparent	**NSYTBS292412T**	1
	275 x 225 x 120 (60+60)	Grey RAL 7035	**NSYTBS292412H**	1
	275 x 225 x 160	Grey RAL 7035	**NSYTBS292416H**	1
	325 x 275 x 120	Grey RAL 7035	**NSYTBS342912**	1
		Transparent	**NSYTBS342912T**	1
	325 x 275 x 160	Grey RAL 7035	**NSYTBS342916H**	1

C

Thalassa boxes

Junction boxes - IP66
960°C

Junction boxes PC 960 °C

	Dimensions H x L x W (mm)	Cover colour	Reference	Qty per package
	Metal cover screws			
PB500090	Surface mounted junction box without grommets and cover locking by **metal** 4 screws. Degree of protection IP66, mechanical protection IK08, flame resistance 960°C. Material: PC			
	65 x 65 x 47	Grey RAL 7035	**NSYTBP775**	5
	80 x 80 x 47	Grey RAL 7035	**NSYTBP885**	5
	105 x 65 x 55	Grey RAL 7035	**NSYTBP1176**	5
	Plastic cover screws			
PB500090	Surface mounted junction box without grommets and cover locking by **plastic** 4 screws. Degree of protection IP66, mechanical protection IK08, flame resistance 960°C. Material: PC			
	105 x 105 x 55	Grey RAL 7035	**NSYTBP11116**	5
PB500091	125 x 80 x 65	Grey RAL 7035	**NSYTBP1397**	2
		Transparent	**NSYTBP1397T**	2
	150 x 105 x 80	Grey RAL 7035	**NSYTBP16128**	2
		Transparent	**NSYTBP16128T**	2
	175 x 105 x 80	Grey RAL 7035	**NSYTBP19128**	2
		Transparent	**NSYTBP19128T**	2
	175 x 105 x 100	Grey RAL 7035	**NSYTBP191210H**	2
		Transparent	**NSYTBP191210HT**	2
	175 x 150 x 80	Grey RAL 7035	**NSYTBP19168**	1
		Transparent	**NSYTBP19168T**	1
	175 x 150 x 100	Grey RAL 7035	**NSYTBP191610H**	1
		Transparent	**NSYTBP191610HT**	1
	225 x 175 x 80	Grey RAL 7035	**NSYTBP24198**	1
		Transparent	**NSYTBP24198T**	1
	225 x 175 x 100 (80+20)	Grey RAL 7035	**NSYTBP241910**	1
		Transparent	**NSYTBP241910T**	1
	225 x 175 x 100 (60+40)	Grey RAL 7035	**NSYTBP241910H**	1
		Transparent	**NSYTBP241910HT**	1
	225 x 175 x 120	Grey RAL 7035	**NSYTBP241912H**	1
		Transparent	**NSYTBP241912HT**	1
	275 x 225 x 80	Grey RAL 7035	**NSYTBP29248**	1
		Transparent	**NSYTBP29248T**	1
	275 x 225 x 120 (100+20)	Grey RAL 7035	**NSYTBP292412**	1
		Transparent	**NSYTBP292412T**	1
	275 x 225 x 120 (60+60)	Grey RAL 7035	**NSYTBP292412H**	1
		Transparent	**NSYTBP292412HT**	1
	275 x 225 x 160	Grey RAL 7035	**NSYTBP292416H**	1
		Transparent	**NSYTBP292416HT**	1
	325 x 275 x 120	Grey RAL 7035	**NSYTBP342912**	1
		Transparent	**NSYTBP342912T**	1
	325 x 275 x 160	Grey RAL 7035	**NSYTBP342916H**	1
		Transparent	**NSYTBP342916HT**	1

C

Thalassa boxes
Accessories

Cable entries overview

Characteristics	Simple-1	Simple-2	Simple-3	Simple-4	Simple-5
	PB500266	PB500975	PB500267	PB500976	PB500099
	Mixed membrane entries for enclosure thickness 20/10e - 32/10e mm.	PVC adjustable cone-shaped entries for enclosure thickness 30/10e - 32/10e mm.	Quick cable entries for enclosure thickness 10/10e - 40/10e mm.	PVC adjustable cone-shaped entries for Pg tubes or for enclosure thickness 12/10e - 15/10e mm.	ISO cable gland.
Cable entry material	Soft membrane		Combined		
Cable glands to be fitted	Not applicable				
Installation possibilities	On cable gland plate or directly on enclosure				
Flexibility of the installation	Low				
Reversibility	Medium				
Ingress protection rating	IP55	IP55	IP67	IP55	IP68
Cable retention	Low	Low	Medium	Low	High
Cable diameter (mm)	From 20 to 40	From 18 to 87	From 12 to 50	From 16 to 44	From 12 to 40
Cable Installation time	Fast	Fast	Fast	Fast	Slow
Quantity of cables to be fitted for a given surface	+	+	+	+	+
Cable entries for cables with connectors	No	No	No	No	No
Cut-out dimensions (mm)	Various circular hole diameters according to cable diameter				
External dimensions (mm)	-	From Ø 25 to 98	-	From Ø 25 to 52	From Ø 15 to 46
Certificates	-	-	-	-	-
Flame resistance	750°C	-	750°C	-	750°C
References*					

* For details, type reference in the search engine of www.schneider-electric.com

C

Thalassa boxes
Accessories

Accessories for cable entries without strain relief

	ISO diameter	Diameter of cable / conduit (mm)	Diameter of drilling (mm)	Colour	Reference	Qty per package
	Simple-1 (Grommets)					
P120649	Flexible grommet suitable for unthreaded holes. For fast installation by using either EVA (easy valve access) membrane entry, i.e. direct entry of rigid cables 4-14 mm², or stepped entry, by removing a step of the desired diameter for cables or conduits from 14 mm² to 20, 25, 32 and 40 mm² respectively. Degree of protection IP55. Usage temperature: -25°C...+40°C. Material: SBS					
		4-20	Ø 23	Grey RAL 7035	**ISM71071**	10
				White RAL 9003	**IMT36130**	10
P120647		4-25	Ø 29	Grey RAL 7035	**ISM71072**	10
				White RAL 9003	**IMT36131**	10
		4-32	Ø 36	Grey RAL 7035	**ISM71073**	10
		4-40	Ø 44	Grey RAL 7035	**ISM71074**	10
	Simple-2 (TET Grommets)					
PB500975	PVC adjustable cone-shaped entrie for enclosure thickness 30/10ᵉ - 32/10ᵉ mm. Material: PVC					
		5-18	Ø 21.5	Grey	**NSYECPC3**	50
		5-26	Ø 29.5	Grey	**NSYECPC5**	25
		5-36	Ø 38.5	Grey	**NSYECPC6**	25
		28-60	Ø 63	Grey	**NSYECPC9**	10
		28-87	Ø 90	Grey	**NSYECPC15**	10
	Simple-3 (PVC Grommets)					
P60848	Grommet suitable for holes with metric thread and various diameters. Degree of protection IP67 Material: EPDM					
	M12	Ø 3 / 5	Ø 12 - 13	Grey	**IMT36179**	50
	M16	Ø 5 / 7	Ø 16 - 17	Grey	**IMT36180**	50
	M20	Ø 7 / 10	Ø 20 - 21	Grey	**IMT36181**	50
	M25	Ø 10 / 14	Ø 25 - 26	Grey	**IMT36182**	50
	M32	Ø 14 / 20	Ø 32 - 33	Grey	**IMT36183**	50
	M40	Ø 20 / 26	Ø 40 - 41	Grey	**IMT36184**	25
	M50	Ø 26 / 35	Ø 50 -51	Grey	**IMT36185**	25
	Simple-4 (PVC)					
PB500976	Adjustable membrane gland 25x33 mm with shaped entries for Pg tubes or for enclosure thickness from 12/10ᵉ to 15/10ᵉ mm. Degree of protection: IP55. Material: PVC					
		3-16	Ø 19.5	Black	**NSYEC1**	50
		6-16	Ø 19.5	Black	**NSYEC2**	50
		7-18	Ø 21.5	Black	**NSYEC3**	50
		8-20	Ø 23.5	Black	**NSYEC4**	25
		10-26	Ø 29.5	Black	**NSYEC5**	25
		12-35	Ø 38.55	Black	**NSYEC6**	25
		13-44	Ø 48.5	Black	**NSYEC7**	25
	Simple-5 (Cable glands acc. to ISO standard)					
P80928	Cable gland equipped with nut and neoprene seal for one cable. May be used both for threaded and unthreaded holes. The IP68 classification assures complete protection. The temperature range is between -30° and +80°C permanently and up to +150°C intermittently. Material: PA6.					
	M12	Ø 3 / 6.5		Grey	**ISM71501**	20
	M16	Ø 4 / 8		Grey	**ISM71502**	20
	M20	Ø 6 / 12		Grey	**ISM71503**	20
	M25	Ø 11 / 17		Grey	**ISM71504**	10
	M32	Ø 15 / 21		Grey	**ISM71505**	10
	M40	Ø 19 / 28		Grey	**ISM71506**	5
	Simple-5 (Security cable gland)					
P100905	Security cable gland equipped with nut and seal for one cable, specially adapted to red boxes for safety circuits. May be used in both theaded and unthreaded holes. The IP68 and choice of plastic material ensures complete protection even in hot environments. Incandescent wire tested at 960°C. Material: PA6.					
	M20	Ø 6 / 12		Red RAL 3000	**IMT36150**	20

C

Thalassa boxes
Accessories

Accessories for cable entries with strain relief

	ISO diameter	Diameter of cable/ conduit (mm)	No of diameters	Colour	Reference	Qty per package
	Gasket					
P100908	Gasket for cable gland. To be used to ensure a tight fit and complete protection IP68 when mounting cable glands on rough surfaces. Material: EPDM rubber.					
	M40			Black	**IMT36156**	25
	Multi-cable discs					
P80956	Multi-cable disc for cable glands. To be used for a secure fitting of multiple cables or wires through the same cable gland. Material: EPDM rubber					
	M16		2 x Ø 4	Black	**IMT36157**	40
	M20		3 x Ø 4	Black	**IMT36158**	40
	M25		4 x Ø 5	Black	**IMT36159**	20
	M32		6 x Ø 5	Black	**IMT36160**	20
	Transport plugs					
P80959	Transport plug for cable gland. To be used to seal a cable gland during transport, or when pre-assembling a cable gland for later use. Material: PA6.					
	M16			Black	**IMT36167**	40
	M20			Black	**IMT36168**	40
	M25			Black	**IMT36169**	20
	M32			Black	**IMT36170**	20
	M40			Black	**IMT36171**	10

C

Thalassa boxes
Accessories

PB500260

DB300048
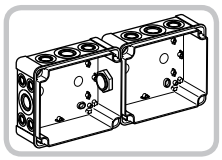

PB500259

Characteristics		Coupling kit	Sealed anti-condensation valve		
		The coupling kit allows you to join several boxes with dimensions from 138 x 93 mm	Controls the pressure to avoid condensation following an internal temperature increase **Applications** Protection of equipment for luminaires, industrial control, transportation, pumps, etc		
Material		Polystyrene 650°	PA6-V2, acrylic co-polymer membrane, water and oil repellent		
Ingress protection rating		IP66	IP68		
Installation		The kit is installed by drilling a hole with Ø 32 mm in the boxes to be coupled	The valve is installed by drilling a hole with Ø 12 mm in the box		
Usage temperature		-	-40...+105°C		
Supply		The kit consists of 2 linking parts, nuts and seals	10 valves, nuts and seals		
Drill Ø	**Minor pack.**	**Reference**	**Permeability (1)**	**Pressure difference (2)**	**References**
32 mm	1	**13934**	-	-	**-**
M12	10	**-**	16 litres/h	ΔP < 1 bar	**NSYCAG12LPH1**
M12	10	**-**	120 litres/h	ΔP < 0.1 bar	**NSYCAG12LPH2**

DB300049
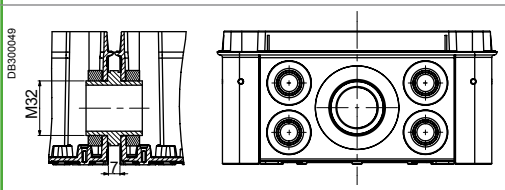

(1) Air flow under ΔP = 0.7 bar.
(2) Condition for IP68.

C

Cover accessories

PB500275

Triangle Double bar

PB500276

PB500277

DB300063
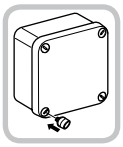

Characteristics			Set of 4 shape screws			Pack of 4 handles
			■ The Thalassa boxes are delivered as standard with slotted-head screws for flat screwdrivers from 4 to 5.5 mm ■ With box sizes from 138 x 93 x 72 mm, these screws can be replaced for screws with different standardised heads, to comply with most cases ■ After removing the standard screw, simply position the new screw by pressing on it ■ The adapter clips (intermediate parts for tightening the cover on the body of the box) are the same as those for the standard screws. They are not delivered with the shape screws (see drawing on page 38) ■ A single key for opening the boxes as well as the other enclosures of your installation			■ The handle (or thumbwheel) allows the screws to be handled without any tools. It is ideally associated with a box equipped with hinges ■ It snaps onto the head of the standard plastic screw
Type		**Minor pack.**	**Height of the lid (mm)**			
			20	**40**	**60**	
Triangle	6.5 mm	1	**NSYAEDST620TB** (1)	**-**	**-**	**-**
	8 mm	1	**NSYAEDST820TB**	**-**	**-**	**-**
Double bar	3 mm	1	**NSYAEDSB320TB**	**-**	**-**	**-**
	5 mm	1	**NSYAEDSB520TB**	**-**	**-**	**-**
Spare standard plastic screw		1	**NSYAEDS20TB**	**NSYAEDS40TB**	**NSYAEDS60TB**	**-**
Pack of 4 handles		1	**-**	**-**	**-**	**NSYAEDKTB**

(1) CNOMO.

Thalassa boxes
Accessories

Terminal blocks

NSYTRV••

NSYTRR••

NSYTRP••

Characteristics	DIN rail terminal blocks
	■ The new Linergy TR terminal blocks have 3 types of connections: screw, spring or "push-in" and they can be mounted on a DIN rail ■ Connection capacity from 1.5 mm² up to 150 mm² ■ Available in grey, blue, orange, red, green, black or white color
Minor pack.	50

Type	Screw connection				Spring connection				"Push-in" connection
	H (mm)	W (mm)	D (mm)	References	H (mm)	W (mm)	D (mm)	References	References
Passthrough, 2.5 mm², grey	47.5	5.2	47.7	**NSYTRV22**	48.5	5.2	36.5	**NSYTRR22**	**NSYTRP22**
Passthrough, 2.5 mm², blue	47.5	5.2	47.7	**NSYTRV22BL**	48.5	5.2	36.5	**NSYTRR22BL**	**NSYTRP22BL**
Protective earth, 2.5 mm²	47.5	5.2	47.7	**NSYTRV22PE**	48.5	5.2	36.5	**NSYTRR22PE**	**NSYTRP22PE**
Passthrough, 4 mm², grey	65.4	5.2	47.7	**NSYTRV44**	56	6.2	36.5	**NSYTRR42**	**NSYTRP42**
Passthrough, 4 mm², blue	65.4	5.2	47.7	**NSYTRV44BL**	56	6.2	36.5	**NSYTRR42BL**	**NSYTRP42BL**
Protective earth, 4 mm²	65.4	6.2	47.7	**NSYTRV44PE**	56	6.2	36.5	**NSYTRR42PE**	**NSYTRP42PE**

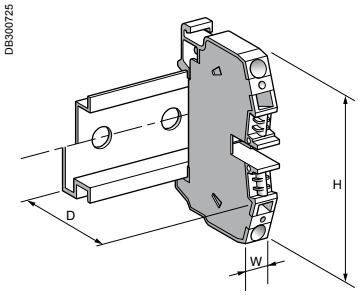

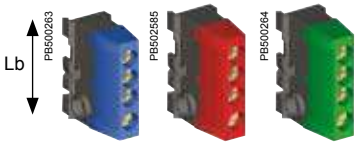

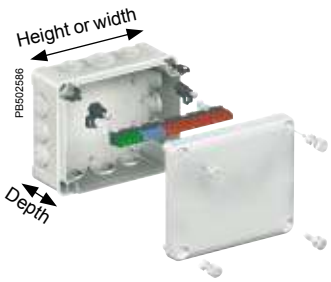

Characteristics	4-hole terminal blocks		
	■ The 4-hole terminal block support bar is particularly well suited to the thermoplastic boxes ■ Boxes with sizes from 192 x 116 mm can accommodate a terminal-block support bar of 12 x 2 mm ■ The screwing terminal blocks are easily clipped onto this bar ■ Terminal-block connection capacity: see the selection table below		
Minor pack.	10	5	5
Type	**Red (live)**	**Blue (neutral)**	**Green (earth)**
4-hole terminal blocks* 2 x 10² + 2 x 16²	**IMT34003**	**IMT34005**	**IMT34007**
Earth terminal block** 2 x 25²	-	-	**IMT34009**

* Terminal block length (Lb): 30 mm.
** The earth terminal snap fits into boxes with dimensions of less than 116 x 116 mm.

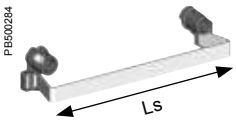

Terminal-block support bar				No. of Terminal blocks 2 x 10² + 2 x 16² 4 holes	Support length Ls (mm)
Height or width	Min. depth	Minor pack.	References		
192	87	1	**IMT34000**	4	140
241	87	1	**IMT34001**	6	185
291	128	1	**IMT34002**	8	235

Discover our complete terminal blocks range in ***LVYED213001EN***.

Thalassa boxes
Accessories

Hinges

Characteristics	Set of 2 hinges		Set of 4 fixing lugs
	■ The hinges can be adapted to all covers with a height of 20 and 40 mm with dimensions from 138 x 93 mm ■ The hinge allows the lid to open fully to 200°		■ Plastic fixing lugs for installation on boxes with dimensions from 116 x 116 mm ■ Option of vertical or horizontal installation
Ingress protection rating	IP66		IP66
Installation	■ The hinge allows an opening angle > 200° ■ The hinge does not require any machining and is installed easily even with the box already equipped		Installation by a single screw at the last moment, with the box closed and equipped
Maximum load	Hinged cover: 10 kg/m²		■ Body: 30 kg/m² ■ Cover: 10 kg/m²
Minor pack.	1		1
Supply	The hinges (2 per set) are delivered with the fixings		4 lugs + screws
	Height of the lid (mm)	**References**	**Reference**
	20	**NSYAEDH20TB**	**NSYAEFTB**
	40	**NSYAEDH40TB**	

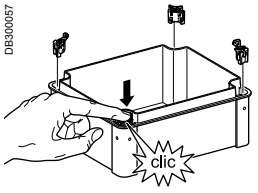

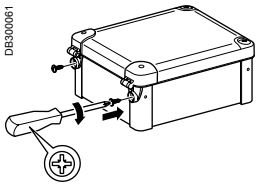

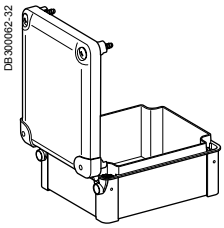

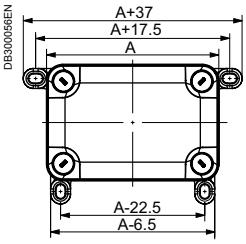

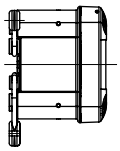

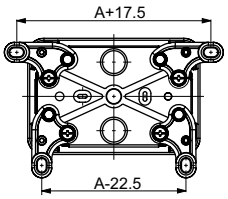

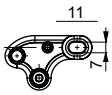

Accessory bag

Accessory	Set of
	Reference
Bag for boxes TBS - TBP	**NSYTBPASBS**

Thalassa boxes
Accessories

Installation accessories

PB500256

PB500257

Characteristics	Mounting plates	
	Mounting plates made to adapt to all usage scenarios	
Material	Galvanised-steel	Insulating polyester plate reinforced with fibreglass, halogen-free: glow wire resistance 750ºC
Thickness	15/10e mm	25/10e mm
Installation	■ Fixing by means of Ø 4-mm self-tapping screws, Pozidrive and slotted head, ref. **NSYAMFSTB** ■ To raise the plate, use the stand-offs ref. **NSYAMFET154TB**, **NSYAMFET204TB**, **NSYAMFET304TB** and the screw **NSYAMFESTB** ■ To stack several mounting plates, use the spacers, ref. **NSYAMFEP154TB**, **NSYAMFEP204TB**, **NSYAMFEP304TB** and the screw **NSYAMFESTB**	
Supply	Plates supplied without screws	

Box (mm)		Dimensions (mm)		Minor pack.	References	
Height	Width	A	B			
192	164	168.5	140	1	**NSYAMPM1916TB**	**NSYAMPA1916TB**
241	194	215	168.5	1	**NSYAMPM2419TB**	**NSYAMPA2419TB**
291	241	265	215	1	**NSYAMPM2924TB**	**NSYAMPA2924TB**
341	291	315	265	1	**NSYAMPM3429TB**	**NSYAMPA3429TB**

DB300064EN

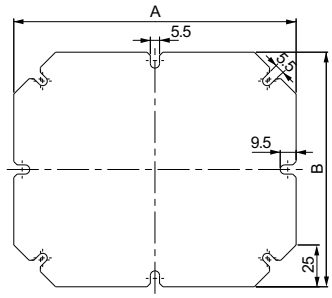

Accessories		Pack of 100 screws	
Ø 4 x 10 mm	1	**NSYAMFSTB**	**NSYAMFSTB**

C

Thalassa boxes
Accessories

Installation accessories

Box with
15 x 5-mm rail.

Box with two
35 x 7.5-mm rails.

Characteristics	Rails					
	Symmetric DIN rails ■ A 15 x 5-mm rail is provided for the compact terminal blocks ■ To raise the rail, use stand-offs ref. **NSYAMFET154TB**, **NSYAMFET204TB**, **NSYAMFET304TB** and the screw **NSYAMFESTB**					
Installation	Fixing of the rails with Ø 4-mm self-tapping screws, (not included), Pozidrive and slotted head, ref. **NSYAMFSTB**					
Supply	Supplied without screws (except for the 15 x 5 mm rails)					
For boxes with height or width	**15 x 5 mm**		**35 x 7.5 mm**		**35 x 15 mm**	
(mm)	**Minor pack.**	**References**	**Minor pack.**	**References**	**Minor pack.**	**References**
105	10	**NSYAMRD11155TB**	10	**NSYAMRD11357TB**	-	-
150	10	**NSYAMRD16155TB**	10	**NSYAMRD16357TB**	-	-
175	10	**NSYAMRD19155TB**	10	**NSYAMRD19357TB**	-	-
225	10	**NSYAMRD24155TB**	10	**NSYAMRD24357TB**	10	**NSYAMRD243515TB**
275	10	**NSYAMRD29155TB**	10	**NSYAMRD29357TB**	10	**NSYAMRD293515TB**
325	10	**NSYAMRD34155TB**	10	**NSYAMRD34357TB**	10	**NSYAMRD343515TB**

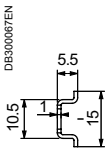

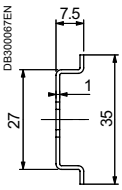

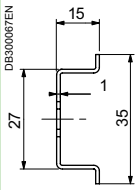

Accessories	Pack of 100 screws
Ø 4 x 10 mm	**NSYAMFSTB**

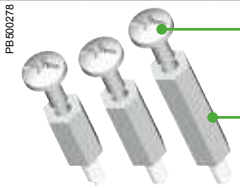

Characteristics		Stand-offs	Spacers
		Stand-offs consisting of a Ø 4-mm self-tapping thread at one end (for direct screwing into the rivets of the box) and an M4 tapping on the other end, for direct installation of a card with an M4 screw, ref. **NSYAMFESTB**, or of a spacer	Spacer for installation on the stand-offs M4 thread and tapping
Material		Steel	Steel
Supply		Set of four M4 self-tapping stand-offs	Set of four M4 spacers
Height (mm)	**Minor pack.**	**References**	
15	1	**NSYAMFET154TB**	**NSYAMFEP154TB**
20	1	**NSYAMFET204TB**	**NSYAMFEP204TB**
30	1	**NSYAMFET304TB**	**NSYAMFEP304TB**

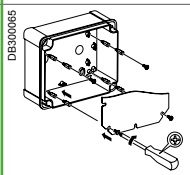

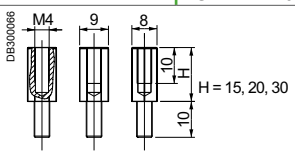

Accessories		Screw for stand-offs and spacers
		M4 x 10 mm screw for fixing cards on the spacers and stand-offs ■ The plate always at the right level ■ A single Ø 4-mm screw for fixing any element
Supply		Batch of 50 screws
	Minor pack.	**References**
	1	**NSYAMFESTB**

Thalassa boxes
Dimensions

Box of 74 x 74 x 54 mm (external dimensions) NSYTB...775

Interior

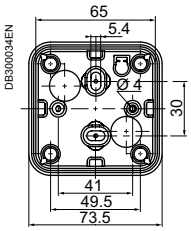

Side

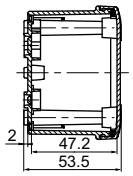

Rear

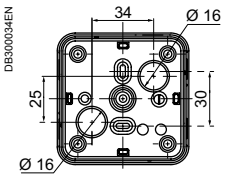

Box of 89 x 89 x 54 mm (external dimensions) NSYTB...885

Interior

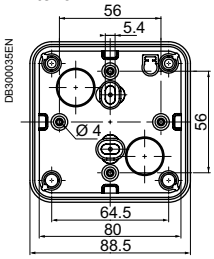

Side

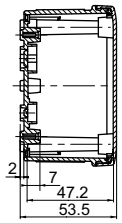

Rear

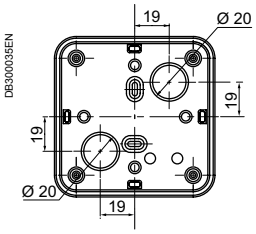

Box of 116 x 74 x 62 or 94 mm (external dimensions) NSYTB...1176 or NSYTB...1179

Interior

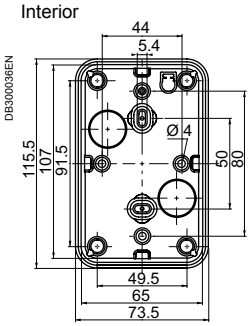

Side

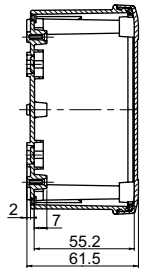

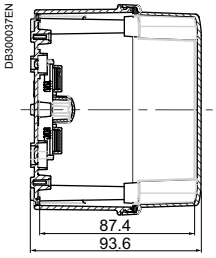

Rear

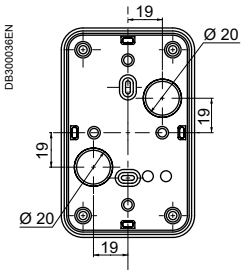

Box of 116 x 116 x 62 or 133 mm (external dimensions) NSYTB...11116 or NSYTB...111113

Interior

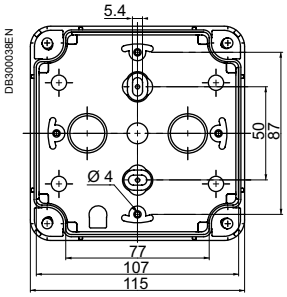

Side

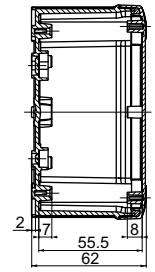

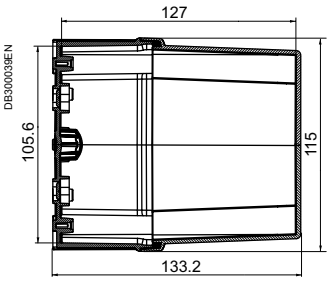

Rear

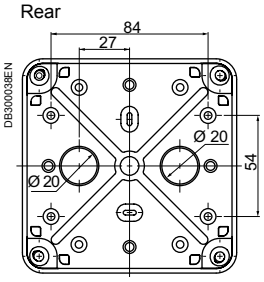

Cover

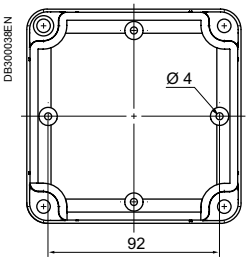

Box of 138 x 93 x 72 mm (external dimensions) NSYTB...1397

Interior

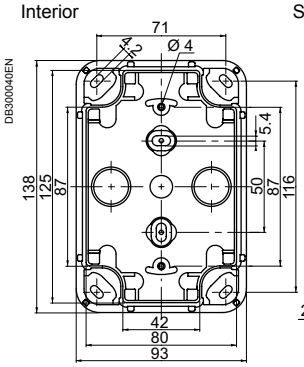

Side

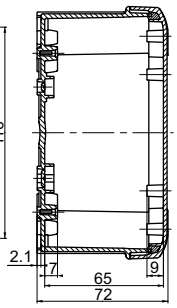

Rear

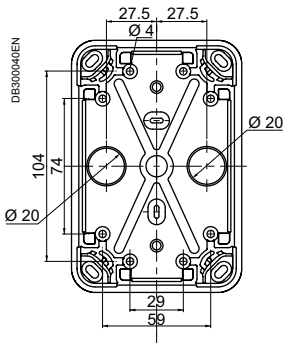

Cover

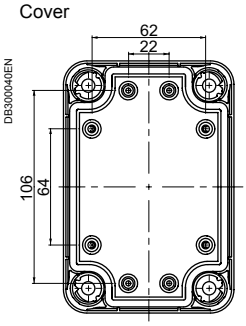

Thalassa boxes
Dimensions

Box of 164 x 121 x 87 mm (external dimensions) NSYTB...16128

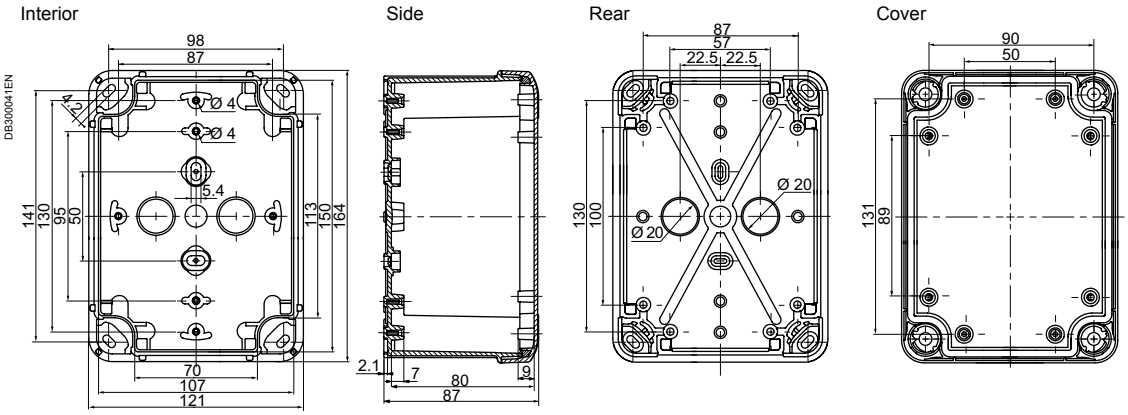

Box of 192 x 121 x 87 or 105 mm (external dimensions) NSYTB...19128 or NSYTB...191210

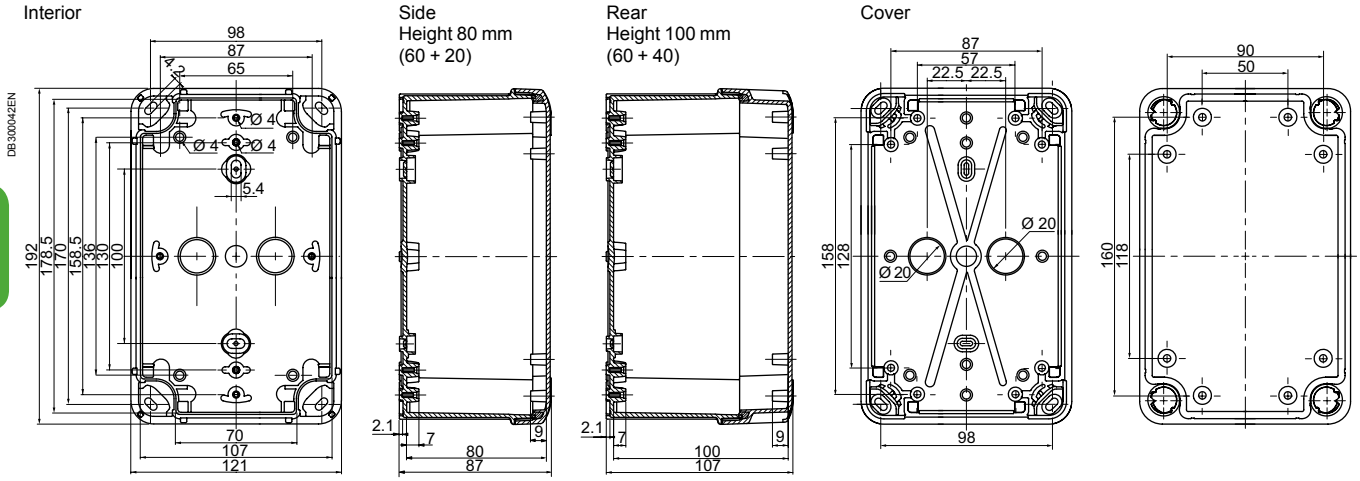

Box of 192 x 164 x 87 or 105 mm (external dimensions) NSYTB...19168 or NSYTB...191610

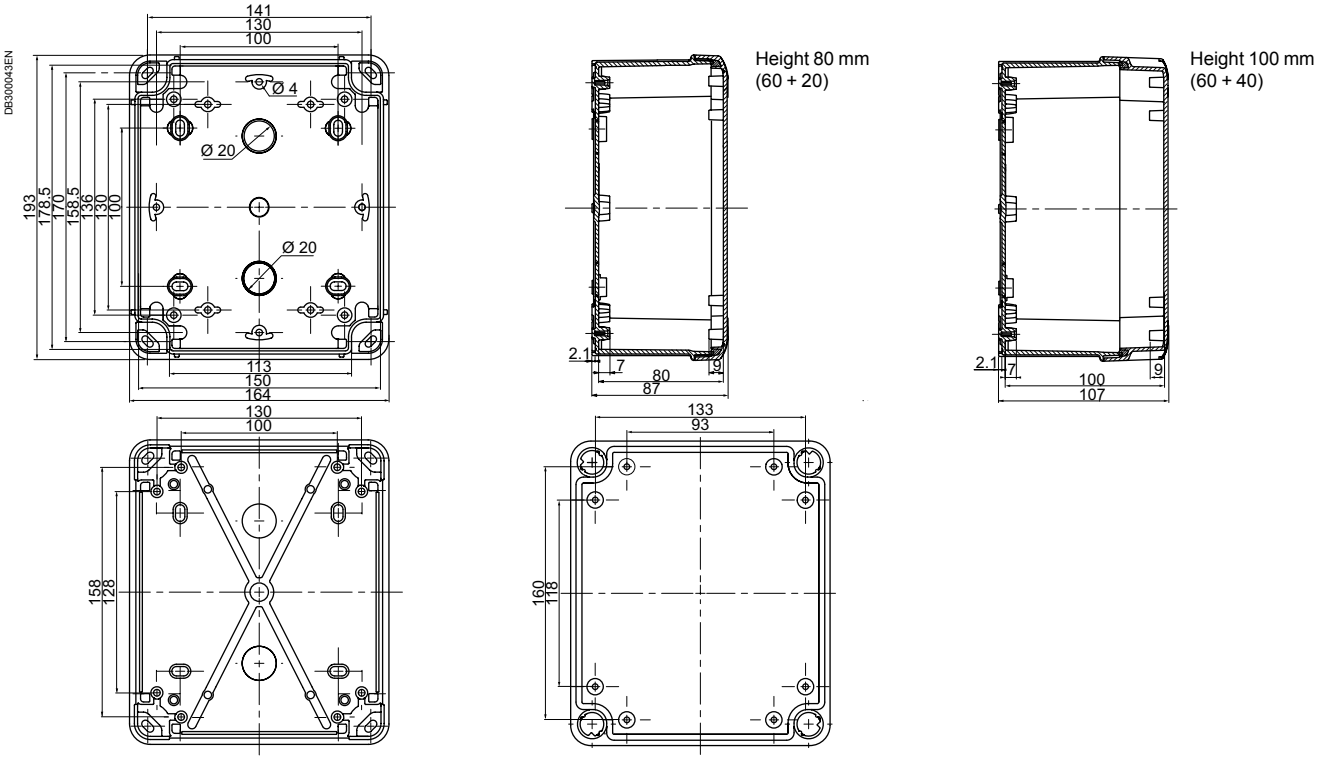

Thalassa boxes
Dimensions

Box of 241 x 194 x 87, 107 or 127 mm (external dimensions) NSYTB...24198, NSYTB...241910 or NSYTB...241912

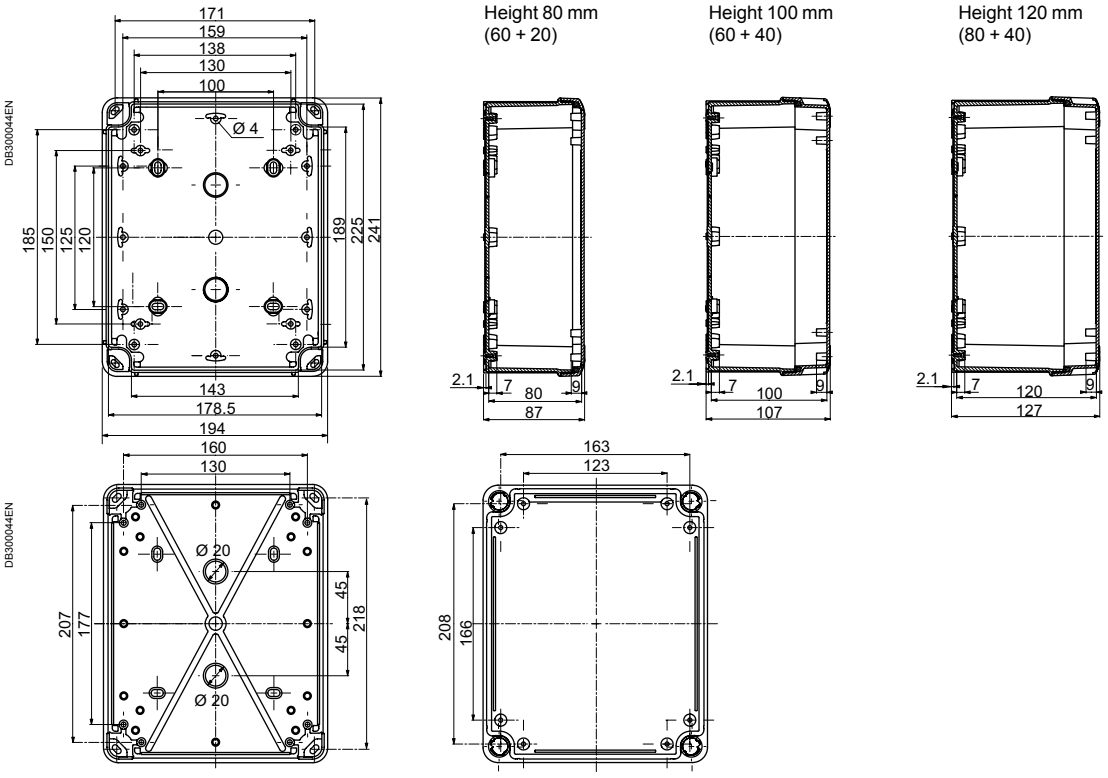

Box of 291 x 241 x 88, 128 or 168 mm (external dimensions) NSYTB...29248, NSYTB...292412 or NSYTB...292416

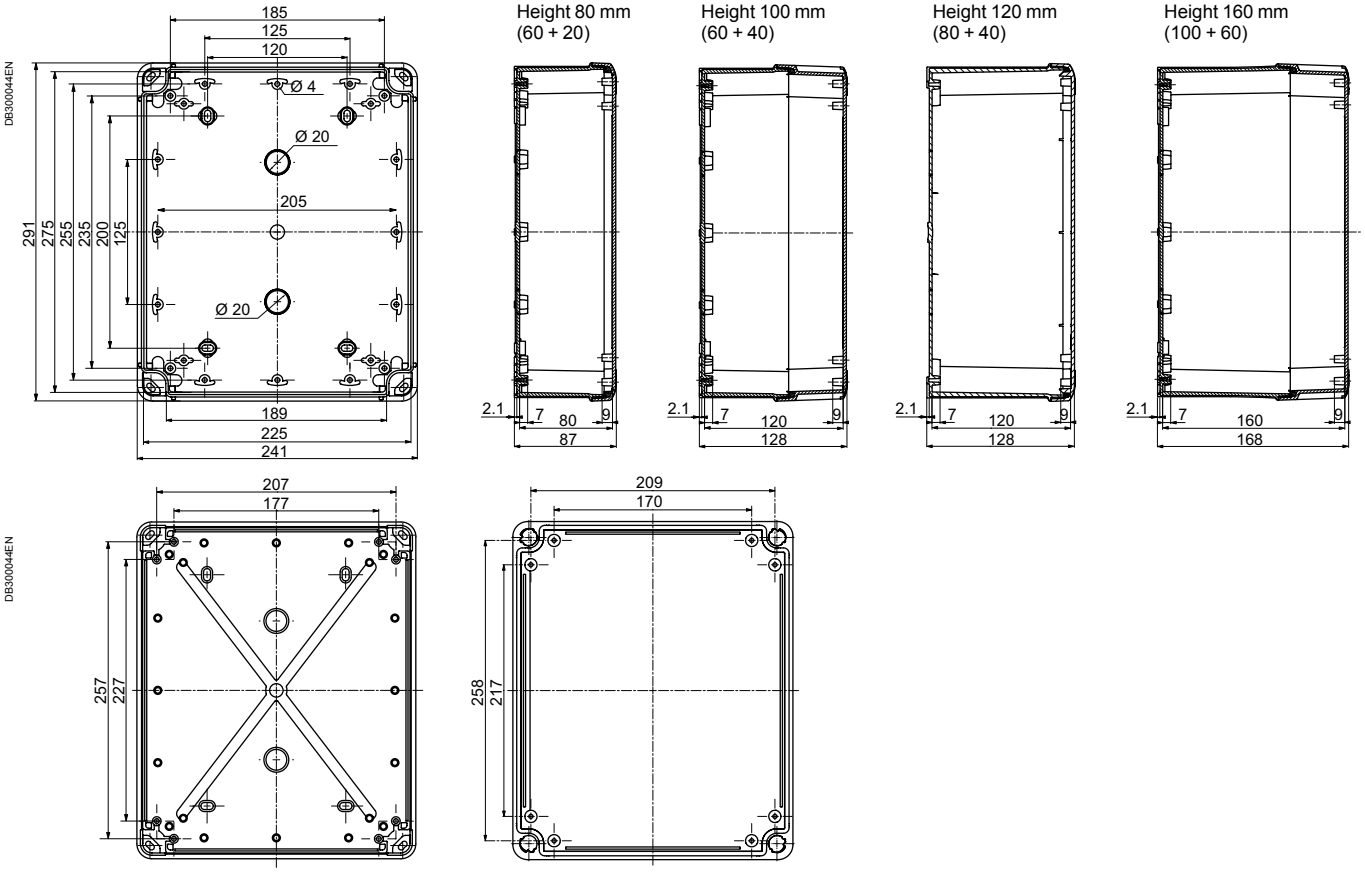

C

Thalassa boxes
Dimensions

Box of 341 x 291 x 128 or 168 mm (external dimensions) NSYTB...342912 or NSYTB...342916

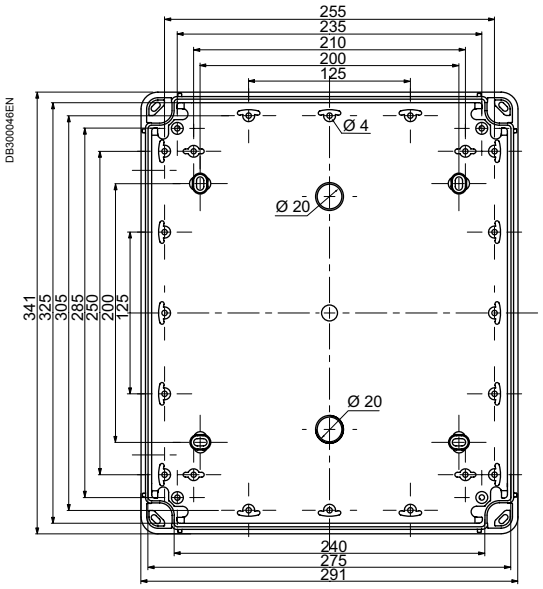

Height 120 mm
(80 + 40)

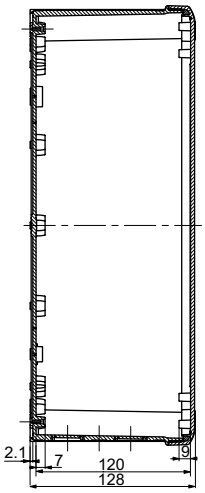

Height 160 mm
(100 + 60)

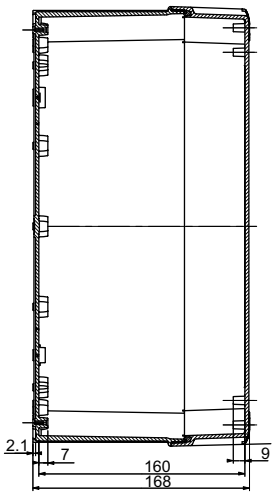

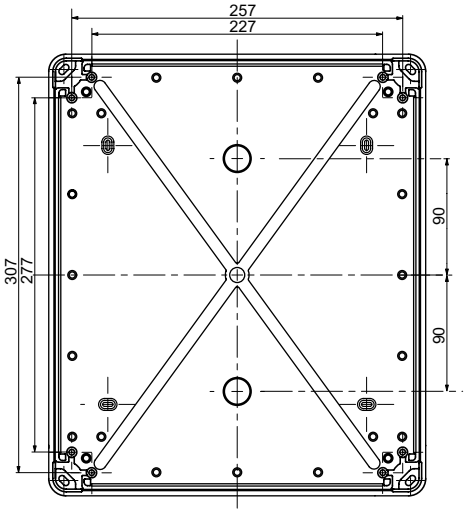

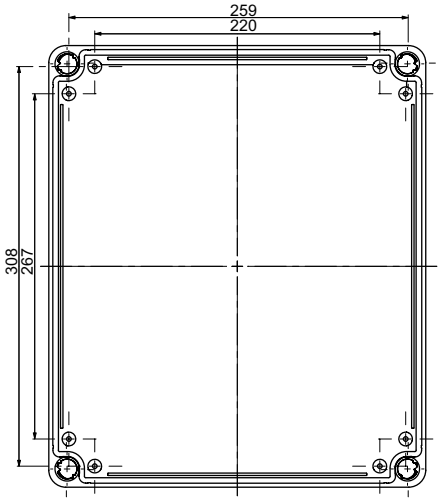

C

Properties of the plastic materials

Mechanical, electrical, physical and fire-resistance properties

Plastic materials generally used to manufacture our products:
- ABS
- Polycarbonate
- PVC (polyvinyl chloride)
- Bayblend® = PC + ABS
- Polyester reinforced with fibreglass
- Altuglas
- Polypropylene
- Polystyrene
- Polyamide 6 and 12
- SBS.

Specifications	Standards	Units	ABS	Polycarbonate	PVC	Bayblend®	Polyester	SBS
Mechanical properties								
Tensile strength	ISO 257	MPa	44	> 65	45	35	85	5
Tensile strain	ISO 527	%	12	> 110	120 to 150	40	0	600
Impact resistance	ISO 179	kJ/m²	125	No breakage	25	No breakage	60	No breakage
Notching resistance	ISO 179	kJ/m²	19	25	20	25	50	-
Electrical properties								
Stress point	IEC 60112	-	-	250-300	> 600	> 550	> 600	-
Surface strength	IEC 60093	ohm	1015	> 1015	> 1013	> 1014	≥1012	> 1013
Dielectric strength	IEC 60243	kV/mm	16.5	> 30	30	24	18-20	20
Specific resistivity	IEC 60093	ohm³cm	1015	> 1016	≥ 1015	1016	≥ 1012	> 1016
Physical properties								
Softening temperature (Vicat B)	ISO 306	°C	95	145-150	79-80	115	(1)	80
Temperature resistance	-	°C	-40...+90	-50...+125	-20...+65	-35...+90	-50...+150	-40...+120
Water absorption	ISO 62	%	0.2 - 0.45	0.15	< 0.1	0.2	0.2	-
Specific weight	ISO 1183	kg/dm³	1.04	1.21	1.4	1.12	1.85	0.3 in 24 h
Fire resistance								
Oxygen index	ISO 4589	%	19	26	45-50	22	24.4	18
Glow wire resistance, 2 mm	IEC 60695-2	°C	650	960	960	750	960	750° (1.5 mm)
Glow wire resistance, 3 mm	IEC 60695-2	°C	650	960	960	750	960	NA

(1) No softening of the polyester.

Specifications	Standards	Units	Altuglas	Polypropylene	Polystyrene	Polyamide 6	Polyamide 12
Mechanical properties							
Tensile strength	ISO 257	MPa	30	35	24	40	30
Tensile strain	ISO 527	%	5	400	36	200	300
Impact resistance	ISO 179	kJ/m²	20	20	63	No breakage	No breakage
Notching resistance	ISO 179	kJ/m²	3	5	50	31.2	15
Electrical properties							
Stress point	IEC 60112	-	-	-	KB175	KB175	KB180
Surface strength	IEC 60093	ohm	≥ 1014	-	> 1013	1012	5 x 1010
Dielectric strength	IEC 60243	kV/mm	13-15	20	≤ 40	23	55
Specific resistivity	IEC 60093	ohm³cm	> 1015	> 1016	> 1015	1011	3 x 1011
Physical properties							
Softening temperature (Vicat B)	ISO 306	°C	120-122	75 (vicat A)	79	230	140
Temperature resistance	-	°C	-20...+80	-10...+80	-15...+60	-20...+100	-50...+125
Water absorption	ISO 62	%	< 0.5	0.1 in 24 h	0.1 in 24 h	1.6	1.5
Specific weight	ISO 1183	kg/dm³	1.18	0.91	1.06	1.14	1.03
Fire resistance							
Oxygen index	ISO 4589	%	18.5	18	18	24	22
Glow wire resistance, 2 mm	IEC 60695-2	°C	-	650	650	750	650
Glow wire resistance, 3 mm	IEC 60695-2	°C	960	650	650	850	650

Properties of the plastic materials

Resistance to chemical agents

The table shows:
- The concentration of the chemical agent in %; sat = saturation
- The resistance of the material:
  +: Resistant
  O: Limited resistance
  –: Not resistant.

Plastic materials generally used to manufacture our products:
- ABS
- Polycarbonate
- PVC (polyvinyl chloride)
- Bayblend® = PC + ABS
- Polyester
- Altuglas
- Polypropylene
- Polystyrene
- Polyamide 6 and 12
- SBS.

Resistance to	ABS		Poly-carbonate		PVC		Bayblend®		Polyester		Altuglas		Poly-propylene		Poly-styrene		Poly-amide 6		Poly-amide 12		SBS	
Acetone		–		–		–		–		–		O	100	+		–	100	+		+		+
Hydrochloric acid	15	+	10	+	30	+	20	+	30	+	sat	+	10	+		O	10	–	10	+	10	+
Citric acid			10	+	sat	+	10	+	100	+	sat	+	sat	+		+	10	O		+	10	+
Lactic acid	80	+	10	+	90	+	10	–	100	+	20	+	90	+		O	50 90	O –		+ +	sat	+
Nitric acid	30	+	10 100	+ –	50	+	10	+	20	+ +	10 100	+ –	25/ 50			O	2 10	O –		–	50	+
Phosphoric acid	85	+	100	+	sat	+		+	100	+	10 95	+ –	sat	+		O	2 10	O –	50	+		+
Sulphuric acid	50	+	50 100	+ –	96	+	30	+	70	+	30	+	96	+		O	3	–	10	+	96	+
Alcohol		O	96	+	96	+		–	50	O	50	O	96	+		+	96	O	96	+		+
Pure aniline		O		–	100	–		–		O		–	100	+			100	O	100	O		
Benzene		+	100	–		–		+		–		O	100	O			100	+		+		–
Liquid bromine			100	–		–		–					100	–					100	–		–
Liquid chlorine				–	100	–		–	sat	+		–	100	–			100	O		–	50	+
Sea water		+	100	+	100	+		+	100	+	100	+		–	100	+			100	+	sat	+
Petrol		+	100	+	100	O		–	100	+	100	O		–		–	100	+		+		–
Ether		–	100	O	100	–		–	100	O		+					100	+	100	+		–
Hexane		O		+		O		O		–			100	+			100	+	100	+		–
Oil and greases		+	100	+	100	+		O	100	+	100	O	100	+		–		+	100	+		–
Aromatic hydrocarbon		O		–		–		–		–		+	–			–		–		+		–
Fuel oil		O	100	O	100	+		–	100	+	100	–	100	+			100	+	100	+		–
Naphthalene					100	O		–	100	+	100	–	100	+			100	+	100	+		
Nitrobenzene		–		–	100	–		–				–	100	O				–		O		–
Phenol		–		–	sat	O		–	20	O		–	sat	+				–		–	10	O
Mineral salts				+		+		+		+		+		+						+		+
Iodine solution				O		–		+				–						+				
Toluene		–		–	100	–		–		+		O	100	O		–	100	+	100	+		–
Trichloroethylene		–		–	100	–		–		–		–	100	O		–	100	–	100	O		–
Urea			sat	+	sat	+		+					sat	+			10	+	sat	+	sat	O

For other chemical agents, please contact us.
All this information is taken from the best sources and provided for information purposes only, with no commitment on our behalf.

D

D

Index

13934

13934 ..... 20, 36

ENN

ENN02290 22
ENN05001 ..... 13, 16
ENN05002 ..... 13, 16
ENN05003 ..... 13, 16
ENN05004 ..... 13, 16
ENN05005 ..... 13, 16
ENN05007 ..... 13, 16
ENN05010 ..... 13, 16
ENN05013 ..... 13, 16
ENN05017 ..... 13, 16
ENN05019 ..... 13, 16
ENN05032 ..... 13, 16
ENN05044 ..... 12, 17
ENN05045 ..... 12, 17
ENN05047 ..... 12, 17
ENN05050 ..... 12, 17
ENN05053 ..... 12, 17
ENN05057 ..... 12, 17
ENN05059 ..... 12, 17
ENN05082 ..... 12, 17
ENN05083 ..... 12, 17
ENN05084 ..... 12, 17
ENN05085 ..... 12, 17
ENN05087 ..... 12, 17
ENN05090 ..... 12, 17
ENN05093 ..... 12, 17
ENN05097 ..... 12, 17
ENN05099 ..... 12, 17
ENN05164 ..... 13, 18
ENN05165 ..... 13, 18
ENN05167 ..... 13, 18
ENN05174 ..... 12, 18
ENN05175 ..... 12, 18
ENN05177 ..... 12, 18
ENN05204 ..... 13, 16
ENN05205 ..... 13, 16
ENN05264 ..... 13, 18
ENN05265 ..... 13, 18
ENN05267 ..... 13, 18
ENN08131 20
ENN08132 20
ENN08162 20
ENN08167 20
ENN08241 21
ENN08271 22
ENN08276 22

IMT

IMT05021 ..... 13, 16
IMT05022 ..... 13, 16
IMT05023 ..... 13, 16
IMT05024 ..... 13, 16
IMT05025 ..... 13, 16
IMT05064 ..... 12, 17
IMT05065 ..... 12, 17
IMT05072 ..... 13, 16
IMT34000 ..... 21, 37
IMT34001 ..... 21, 37
IMT34002 ..... 21, 37
IMT34003 ..... 21, 37
IMT34005 ..... 21, 37
IMT34007 ..... 21, 37
IMT34009 ..... 21, 37
IMT36089 21
IMT36130 ..... 20, 34
IMT36131 ..... 20, 34
IMT36150 ..... 19, 34

E

Index

IMT36151 19
IMT36152 19
IMT36153 19
IMT36154 19
IMT36155 19
IMT36156 ..... 19, 35
IMT36157 ..... 19, 35
IMT36158 ..... 19, 35
IMT36159 ..... 19, 35
IMT36160 ..... 19, 35
IMT36161 19
IMT36162 19
IMT36163 19
IMT36164 19
IMT36165 19
IMT36166 19
IMT36167 ..... 19, 35
IMT36168 ..... 19, 35
IMT36169 ..... 19, 35
IMT36170 ..... 19, 35
IMT36171 ..... 19, 35
IMT36179 ..... 20, 34
IMT36180 ..... 20, 34
IMT36181 ..... 20, 34
IMT36182 ..... 20, 34
IMT36183 ..... 20, 34
IMT36184 ..... 20, 34
IMT36185 ..... 20, 34

ISM

ISM71071 ..... 20, 34
ISM71072 ..... 20, 34
ISM71073 ..... 20, 34
ISM71074 ..... 20, 34
ISM71501 ..... 19, 34
ISM71502 ..... 19, 34
ISM71503 ..... 19, 34
ISM71504 ..... 19, 34
ISM71505 ..... 19, 34
ISM71506 ..... 19, 34

NSY

NSYAEDH20TB 38
NSYAEDH40TB 38
NSYAEDKTB 36
NSYAEDS20TB 36
NSYAEDS40TB 36
NSYAEDS60TB 36
NSYAEDSB320TB 36
NSYAEDSB520TB 36
NSYAEDST620TB 36
NSYAEDST820TB 36
NSYAEFTB 20, 38
NSYAMFEP154TB 40
NSYAMFEP204TB 40
NSYAMFEP304TB 40
NSYAMFESTB 40
NSYAMFET154TB 40
NSYAMFET204TB 40
NSYAMFET304TB 40
NSYAMFSTB 39, 40
NSYAMPA1916TB 39
NSYAMPA2419TB 39
NSYAMPA2924TB 39
NSYAMPA3429TB 39
NSYAMPM1916TB 39
NSYAMPM2419TB 39
NSYAMPM2924TB 39
NSYAMPM3429TB 39
NSYAMRD11155TB 22, 40
NSYAMRD11357TB 22, 40

Index

NSYAMRD16155TB 22, 40
NSYAMRD16357TB 22, 40
NSYAMRD19155TB 22, 40
NSYAMRD19357TB 22, 40
NSYAMRD24155TB 22, 40
NSYAMRD24357TB 22, 40
NSYAMRD29155TB 22, 40
NSYAMRD29357TB 22, 40
NSYAMRD34155TB 22, 40
NSYAMRD34357TB 22, 40
NSYAMRD243515TB 40
NSYAMRD293515TB 40
NSYAMRD343515TB 40
NSYCAG12LPH1 36
NSYCAG12LPH2 36
NSYEC1 34
NSYEC2 34
NSYEC3 34
NSYEC4 34
NSYEC5 34
NSYEC6 34
NSYEC7 34
NSYECPC3 34
NSYECPC5 34
NSYECPC6 34
NSYECPC9 34
NSYECPC15 34
NSYTBP775 ..... 28, 32
NSYTBP885 ..... 28, 32
NSYTBP1176 ..... 28, 32
NSYTBP1397 ..... 28, 32
NSYTBP1397T 28, 32
NSYTBP11116 ..... 28, 32
NSYTBP16128 ..... 28, 32
NSYTBP16128T 28, 32
NSYTBP19128 ..... 28, 32
NSYTBP19128T 28, 32
NSYTBP19168 ..... 28, 32
NSYTBP19168T 28, 32
NSYTBP24198 ..... 28, 32
NSYTBP24198T 28, 32
NSYTBP29248 ..... 28, 32
NSYTBP29248T 28, 32
NSYTBP191210H 28, 32
NSYTBP191210HT 28, 32
NSYTBP191610H 28, 32
NSYTBP191610HT 28, 32
NSYTBP241910 ..... 28, 32
NSYTBP241910H 28, 32
NSYTBP241910HT 28, 32
NSYTBP241910T 28, 32
NSYTBP241912H 28, 32
NSYTBP241912HT 28, 32
NSYTBP292412 ..... 28, 32
NSYTBP292412H 28, 32
NSYTBP292412HT 28, 32
NSYTBP292412T 28, 32
NSYTBP292416H 28, 32
NSYTBP292416HT 28, 32
NSYTBP342912 ..... 28, 32
NSYTBP342912T 28, 32
NSYTBP342916H 28, 32
NSYTBP342916HT 28, 32
NSYTBPASBS 38
NSYTBS775 ..... 28, 31
NSYTBS885 ..... 28, 31
NSYTBS1176 ..... 28, 31
NSYTBS1179H 28, 31
NSYTBS1397 ..... 28, 31
NSYTBS1397T 28, 31
NSYTBS11116 ..... 28, 31
NSYTBS16128 ..... 28, 31

Index

NSYTBS16128T 28, 31
NSYTBS19128 ..... 28, 31
NSYTBS19128T 28, 31
NSYTBS19168 ..... 28, 31
NSYTBS19168T 28, 31
NSYTBS24198 ..... 28, 31
NSYTBS24198T 28, 31
NSYTBS29248 ..... 28, 31
NSYTBS29248T 28, 31
NSYTBS111113H 28, 31
NSYTBS191210H 28, 31
NSYTBS191210HT 28
NSYTBS191610H 28, 31
NSYTBS191610HT 28
NSYTBS241910 ..... 28, 31
NSYTBS241910H 28, 31
NSYTBS241910HT 28
NSYTBS241910T 28, 31
NSYTBS241912H 28, 31
NSYTBS241912HT 28
NSYTBS292412 ..... 28, 31
NSYTBS292412H 28, 31
NSYTBS292412HT 28
NSYTBS292412T 28, 31
NSYTBS292416H 28, 31
NSYTBS292416HT 28
NSYTBS342912 ..... 28, 31
NSYTBS342912T 28, 31
NSYTBS342916H 28, 31
NSYTBS342916HT 28
NSYTRP22 37
NSYTRP22BL 37
NSYTRP22PE 37
NSYTRP42 37
NSYTRP42BL 37
NSYTRP42PE 37
NSYTRR22 37
NSYTRR22BL 37
NSYTRR22PE 37
NSYTRR42 37
NSYTRR42BL 37
NSYTRR42PE 37
NSYTRV22 37
NSYTRV22BL 37
NSYTRV22PE 37
NSYTRV44 37
NSYTRV44BL 37
NSYTRV44PE 37

WDE

WDE0000010 21

XAL

XALE2 29
XALE3 29
XALE2141 29
XALE3255 29
XALEK1702 29

E

Life Is On | Schneider Electric

Schneider Electric Industries SAS

35, rue Joseph Monier
CS 30323
92506 Rueil Malmaison Cedex
France

RCS Nanterre 954 503 439
Capital social 896 313 776 €
www.schneider-electric.com

03/2017
LSB02647EN

© 2017 - Schneider Electric. All Rights Reserved.
All trademarks are owned by Schneider Electric Industries SAS or its affiliated companies.

This document has been printed on recycled paper