EAV7640603

Door mounting kit IP65/UL Type 12 for Graphic Display Terminal

VW3A1112

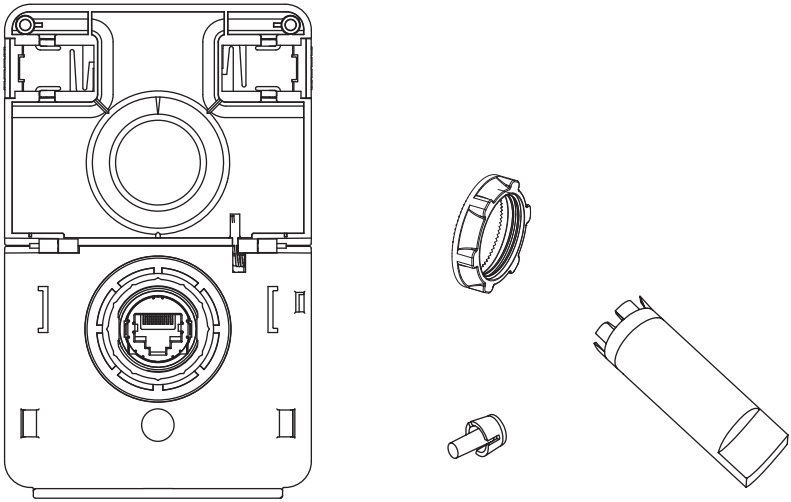

⚠ ⚠ DANGER

HAZARD OF ELECTRIC SHOCK, EXPLOSION, OR ARC FLASH

- Only appropriately trained persons who are familiar with and understand the contents of this manual and all other pertinent product documentation and who have received safety training to recognize and avoid hazards involved are authorized to work on and with this drive system. Installation, adjustment, repair, and maintenance must be performed by qualified personnel.
- The system integrator is responsible for compliance with all local and national electrical code requirements as well as all other applicable regulations with respect to grounding of all equipment.
- Many components of the product, including the printed circuit boards, operate with mains voltage. Do not touch. Use only electrically insulated tools.
- Do not touch unshielded components or terminals with voltage present.
- Motors can generate voltage when the shaft is rotated. Prior to performing any type of work on the drive system, block the motor shaft to prevent rotation.
- AC voltage can couple voltage to unused conductors in the motor cable. Insulate both ends of unused conductors of the motor cable.
- Do not short across the DC bus terminals or the DC bus capacitors or the braking resistor terminals.
- Before performing work on the drive system:
  - Disconnect all power, including external control power that may be present.
  - Place a "Do Not Turn On" label on all power switches.
  - Lock all power switches in the open position.
  - Wait 15 minutes to allow the DC bus capacitors to discharge. The DC bus LED is not an indicator of the absence of DC bus voltage that can exceed 800 Vdc.
  - Measure the voltage on the DC bus between the DC bus terminals (PA/+ and PC/-) using a properly rated voltmeter to verify that the voltage is <42 Vdc.
  - If the DC bus capacitors do not discharge properly, contact your local Schneider Electric representative. Do not repair or operate the product.
- Install and close all covers before applying voltage.

Failure to follow these instructions will result in death or serious injury.

Electrical equipment should be installed, operated, serviced, and maintained only by qualifed personnel. No responsibility is assumed by Schneider Electric for any consequences arising out of the use of this product.

© 2015 Schneider Electric. All Rights Reserved.

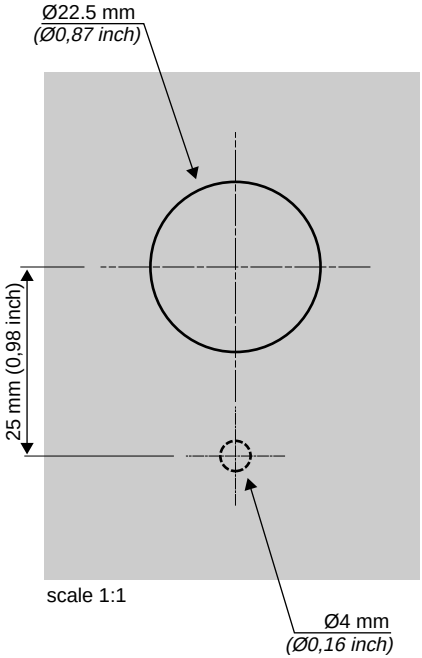
Ø22.5 mm
(Ø0,87 inch)
25 mm (0,98 inch)
scale 1:1
Ø4 mm
(Ø0,16 inch)

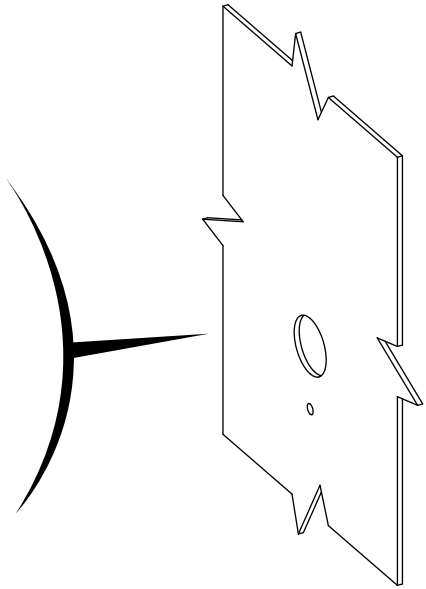

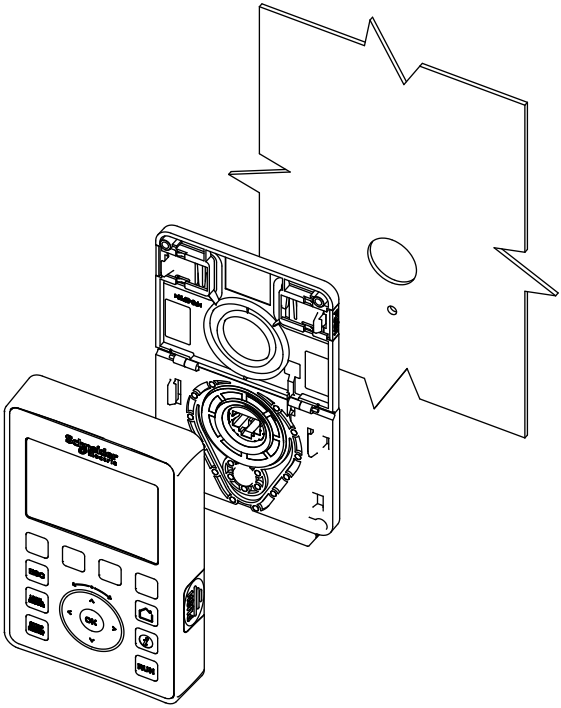

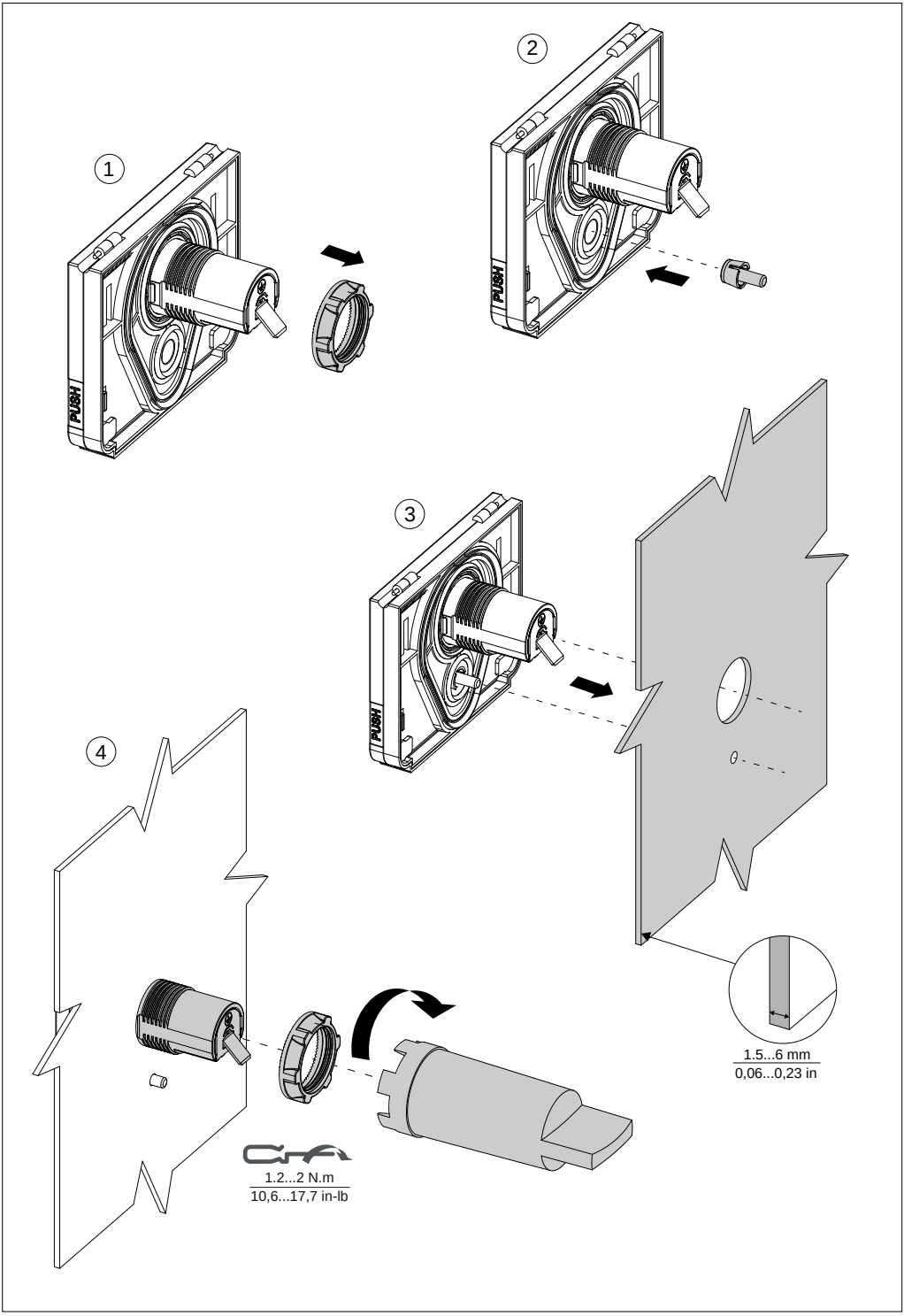
1
2
3
4
PUSH
PUSH
PUSH
1.5...6 mm
0,06...0,23 in
1.2...2 N.m
10,6...17,7 in-lb

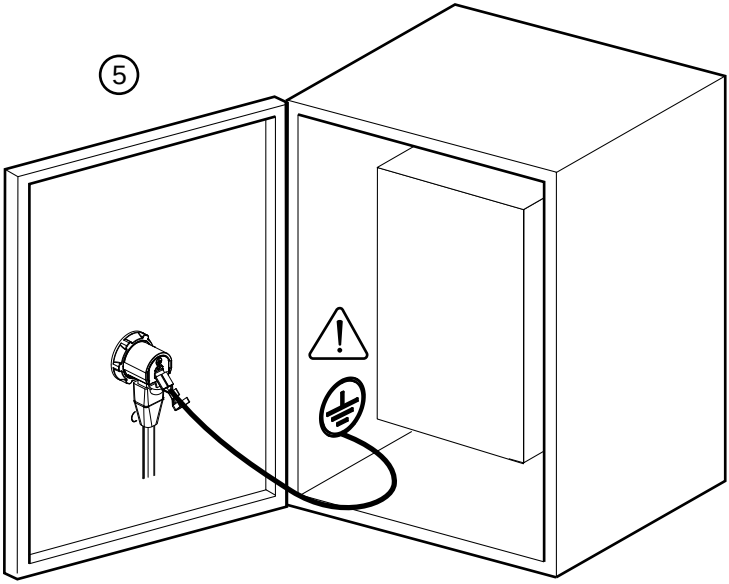

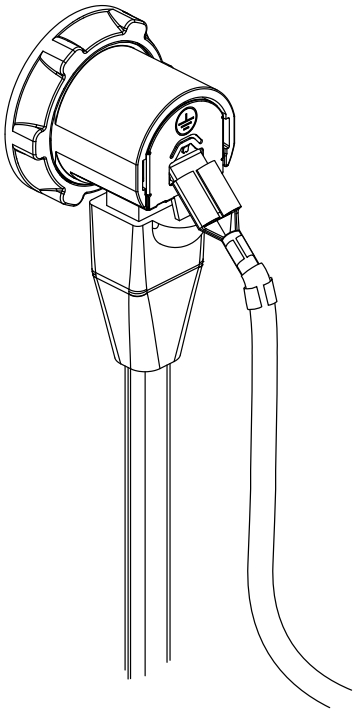

= IP65
UL Type 12

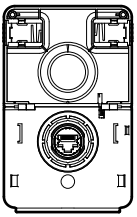

= IP20
UL Type 1

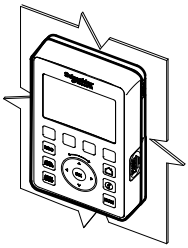

= IP65
UL Type 12