EAV7640502

Extension module of Output relays

VW3A3204

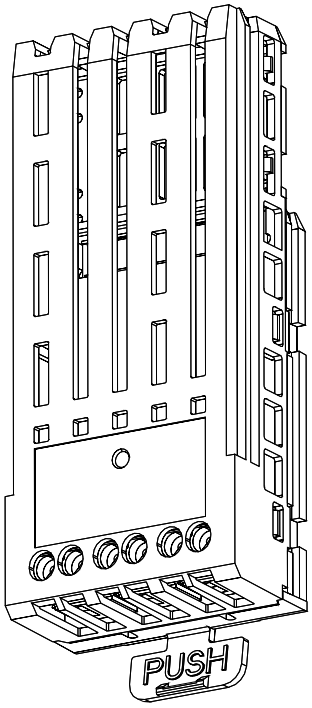

⚠ ⚠ DANGER

HAZARD OF ELECTRIC SHOCK, EXPLOSION, OR ARC FLASH

• Only appropriately trained persons who are familiar with and understand the contents of this manual and all other pertinent product documentation and who have received safety training to recognize and avoid hazards involved are authorized to work on and with this drive system. Installation, adjustment, repair and maintenance must be performed by qualified personnel.

• The system integrator is responsible for compliance with all local and national electrical code requirements as well as all other applicable regulations with respect to grounding of all equipment.

• Many components of the product, including the printed circuit boards, operate with mains voltage.

• Only use properly rated, electrically insulated tools and measuring equipment.

• Do not touch unshielded components or terminals with voltage present.

• Motors can generate voltage when the shaft is rotated. Prior to performing any type of work on the drive system, block the motor shaft to prevent rotation.

• AC voltage can couple voltage to unused conductors in the motor cable. Insulate both ends of unused conductors of the motor cable.

• Do not short across the DC bus terminals or the DC bus capacitors or the braking resistor terminals.

• Before performing work on the drive system:

- Disconnect all power, including external control power that may be present.
  Take into account that the circuit breaker or main switch does not de-energize all circuits.
- Place a "Do Not Turn On" label on all power switches related to the drive system.
- Lock all power switches in the open position.
- Wait 15 minutes to allow the DC bus capacitors to discharge.
- Follow the instructions given in the chapter “Verifying the Absence of Voltage” in the installation manual of the product.

• Before applying voltage to the drive system:

- Verify that the work has been completed and that the entire installation cannot cause hazards.
- If the mains input terminals and the motor output terminals have been grounded and short-circuited, remove the ground and the short circuits on the mains input terminals and the motor output terminals.
- Verify proper grounding of all equipment.
- Verify that all protective equipment such as covers, doors, grids is installed and/or closed.

Failure to follow these instructions will result in death or serious injury.

Electrical equipment should be installed, operated, serviced, and maintained only by qualifed personnel. No responsibility is assumed by Schneider Electric for any consequences arising out of the use of this product.

© 2019 Schneider Electric. All Rights Reserved.

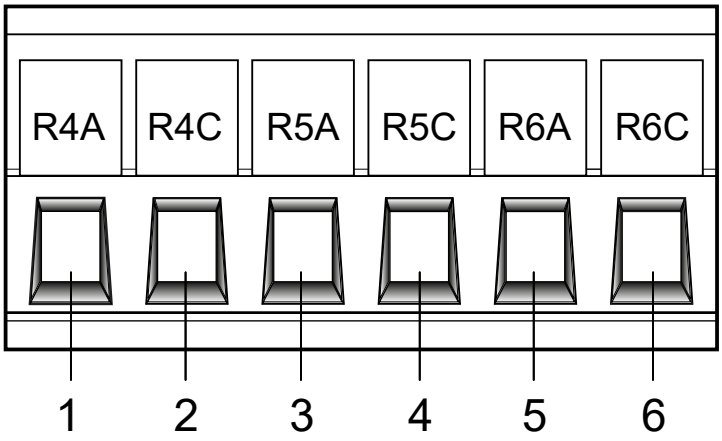

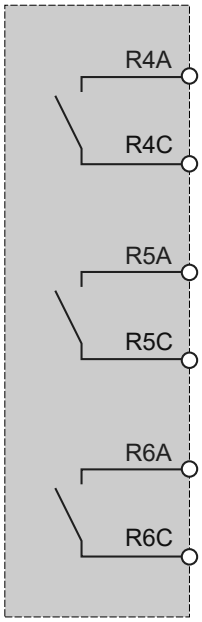

Maximum wire size: 1.5 mm² (AWG 16)

Maximum tightening torque: 0.5 N·m (4.4 lbf.in)

Stripping length: 10 mm (0.39 in.)

Note: Only one VW3A3204 can be installed for one drive

PIN	SIGNAL	FUNCTION	ELECTRIC CHARACTERISTICS
1	**R4A**	NO contact of relay R4	**Programmable Output Relay R4, R5 and R6:** • Minimum switching current: 5 mA for 24 Vdc • Maximum switching current on resistive load: 5 A for 250 Vac (OVC II) and 30 Vdc. • Maximum switching current on inductive load: 2 A for 250 Vac (OVC II) and 30 Vdc Inductive load must be equipped with a voltage surge limitation device according to ac or dc operation with total energy dissipation greater than the inductive energy stored in the load. See drive installation manual on www.se.com. • Refresh time: same as relay output of drive it is installed on. See drive installation manual on www.se.com. • Service life: 70,000 operation at 5 A on resistive load 100,000 operation at 4 A on resistive load 300,000 operation at 2 A on resistive load 700,000 operation at 0.5 A on resistive load
2	**R4C**		
3	**R5A**	NO contact of relay R5	
4	**R5C**		
5	**R6A**	NO contact of relay R6	
6	**R6C**		

ATV900
ATV340
Mounting

1)

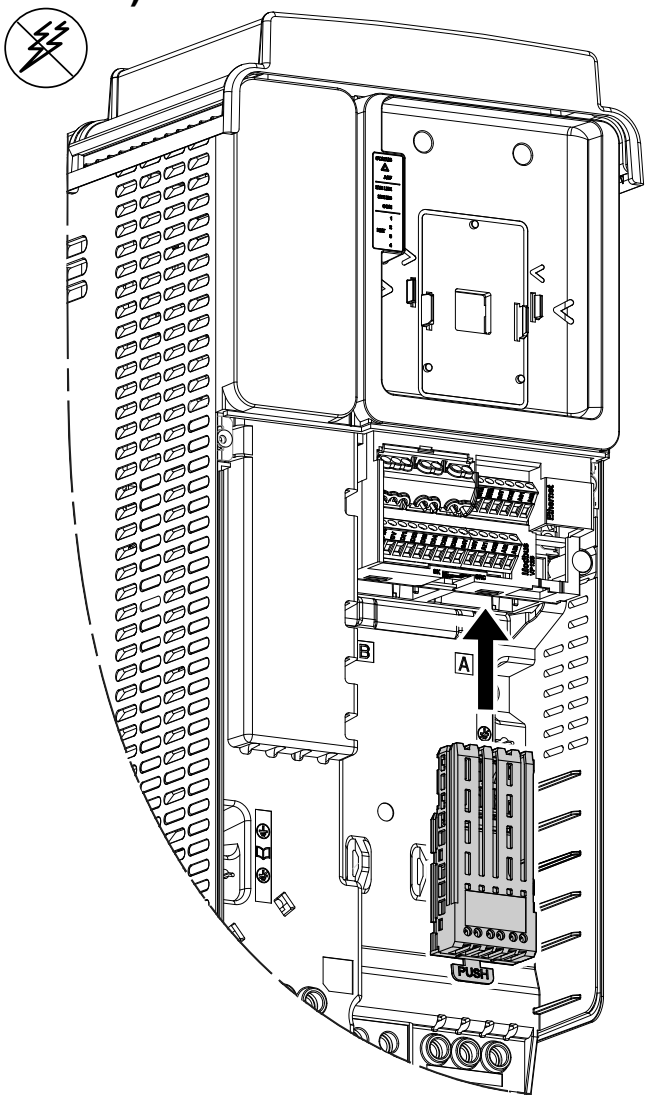

2)

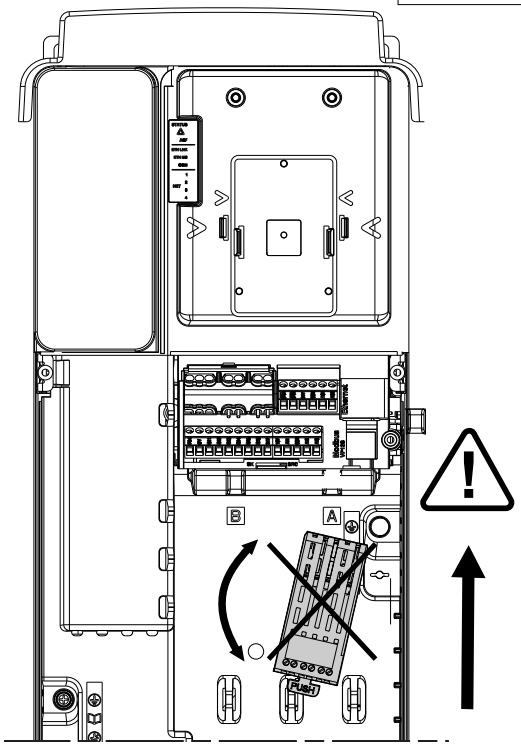

3)

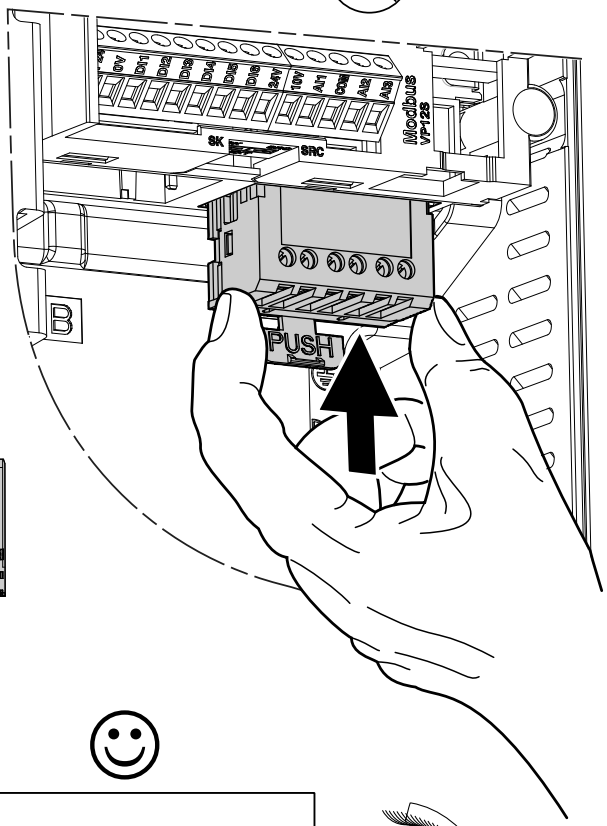

4)

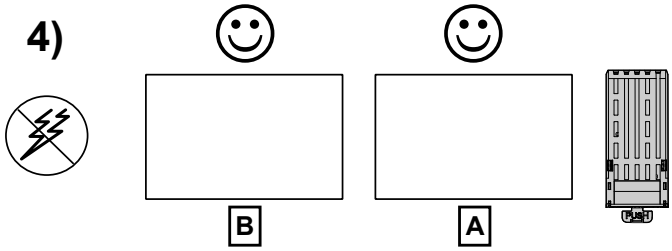

5)

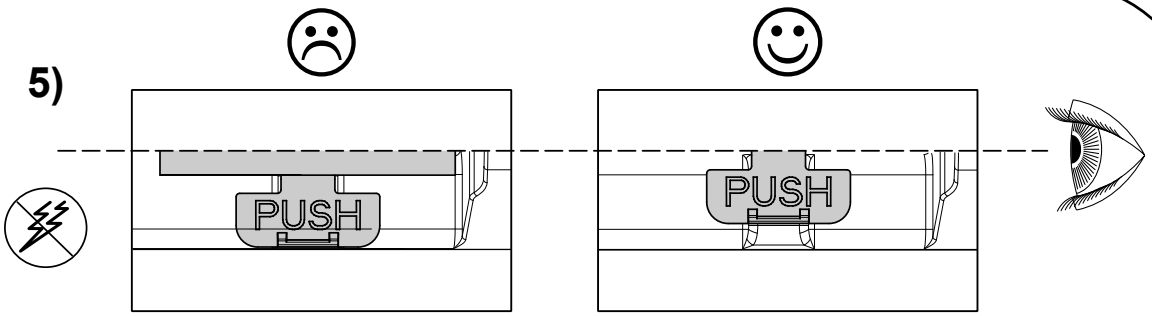

ATV900
ATV340
Removing

1)

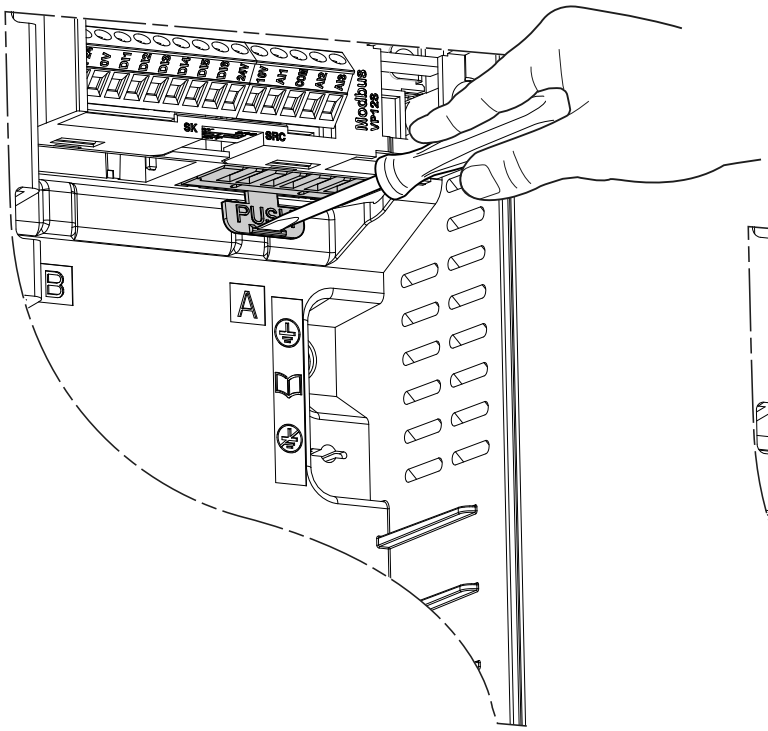

2)

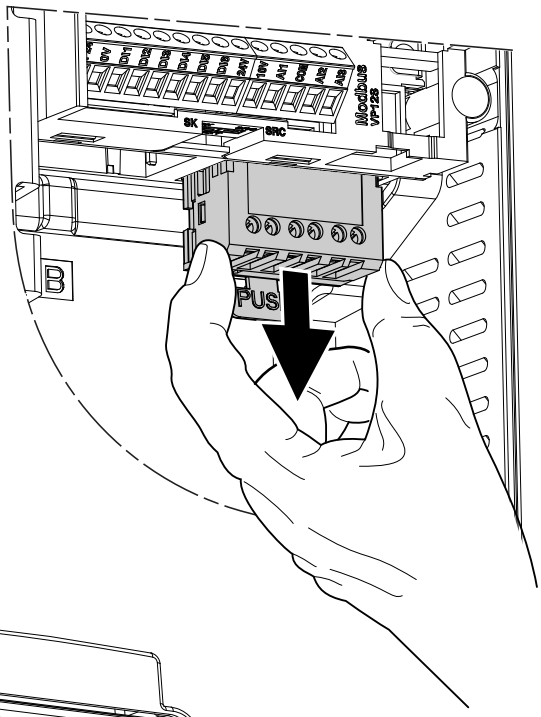

3)

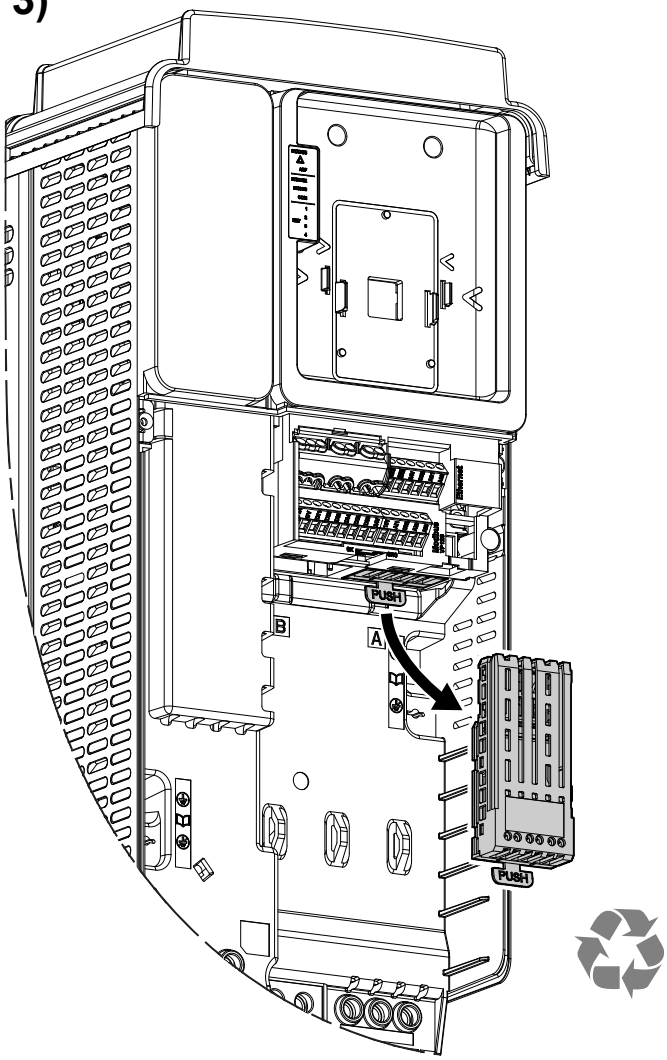

ATV340

Mounting

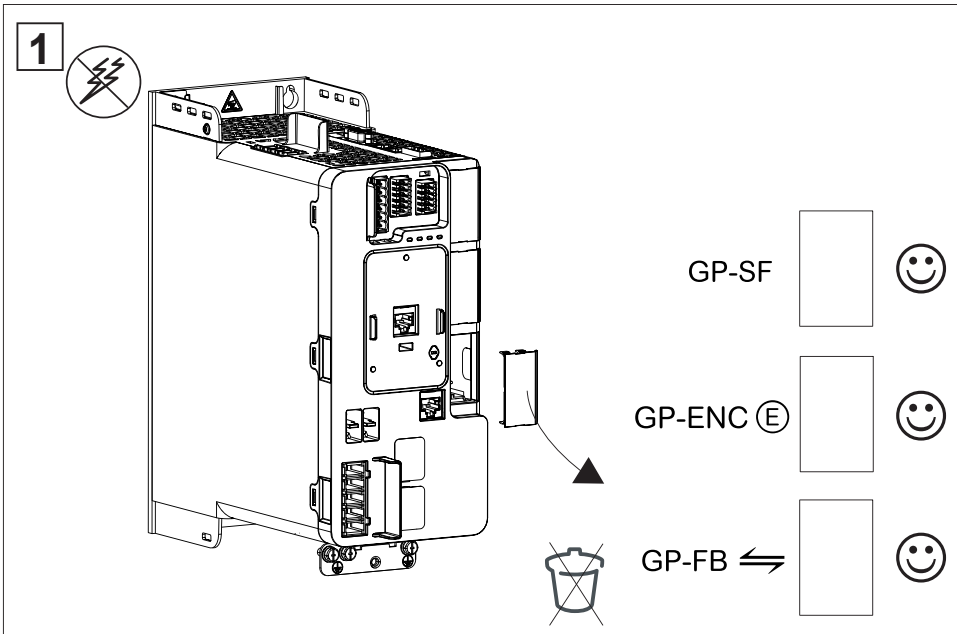

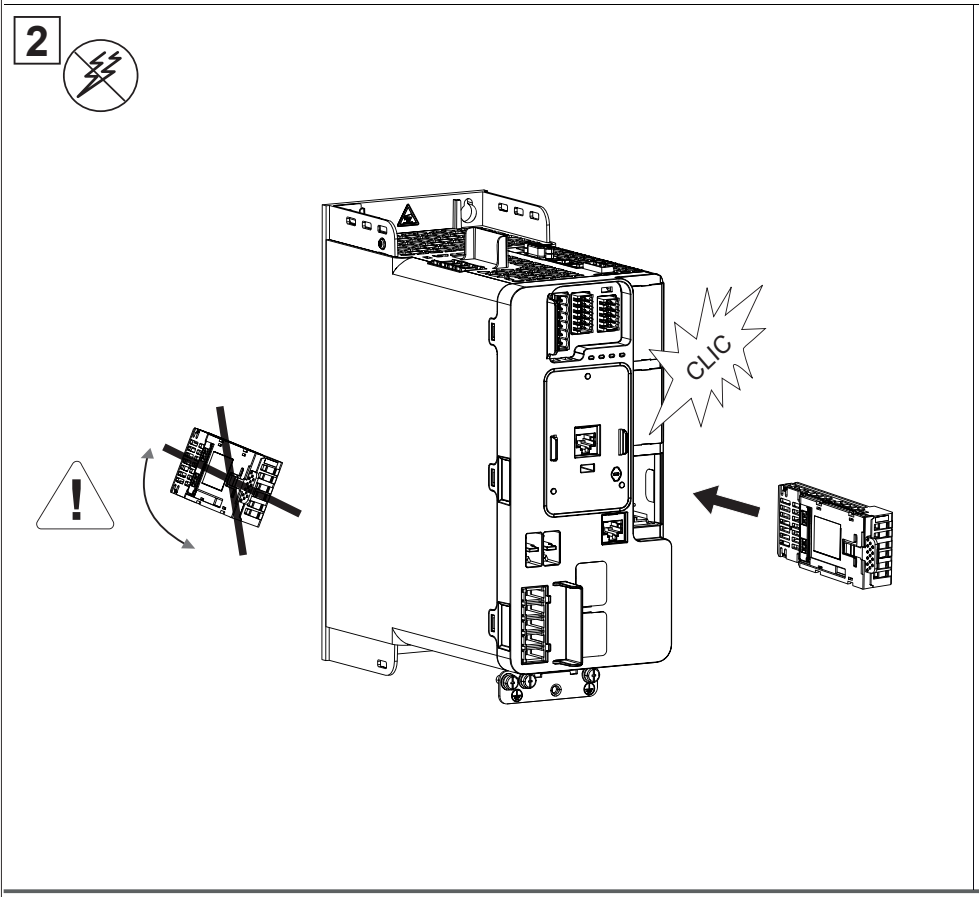

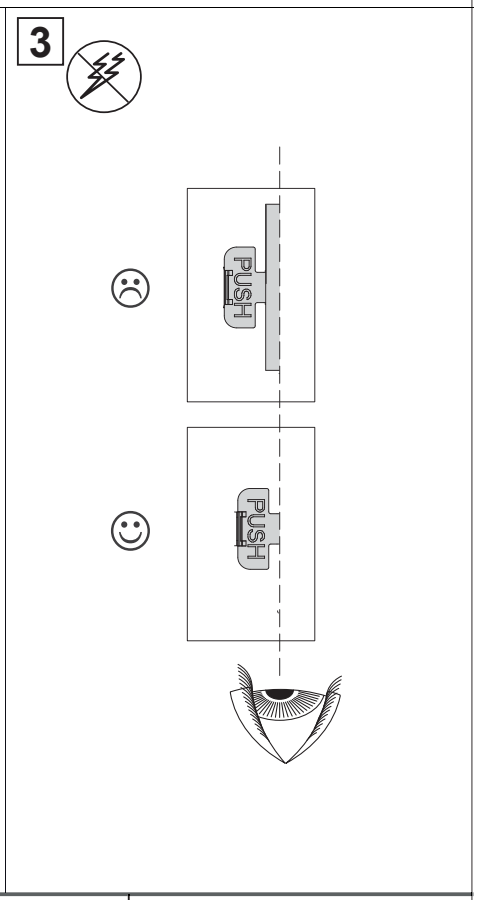
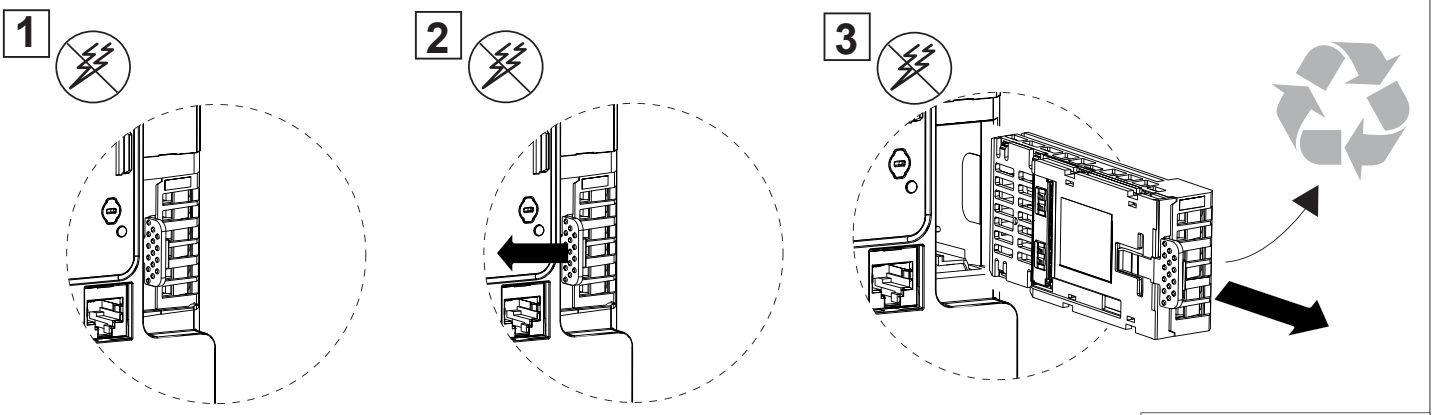
Removing