Variable speed drives

Altivar 61 and Altivar 61 Plus

for asynchronous motors
from 0.75 kW/1 HP to 2400 kW

Catalogue

April 2014

Schneider Electric

How can you fit a 6000-page catalog in your pocket ?

Schneider Electric provides you with the complete set of industrial automation catalogs all on a handy USB key for PC or in an application for tablets

Digi-Cat, a handy USB key for PC

- Convenient to carry
- Always up-to-date
- Environmentally friendly
- Easy-to-share format

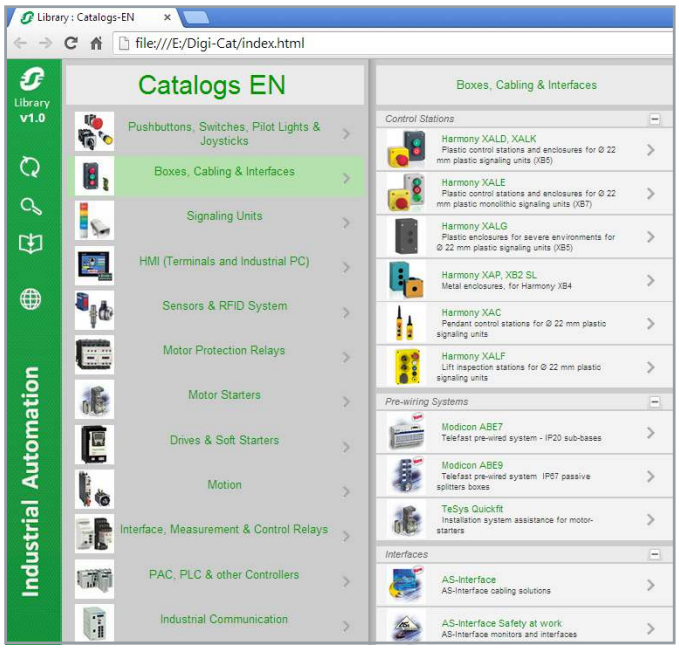

Contact your local representative to get your own Digi-Cat

e-Library, the app for tablets

If you have an iPad®:

- Go to the App Store and search for e-Library
- or scan the QR code

If you have an Android tablet:

- Go to the Google Play Store™ and search for eLibrary
- or scan the QR code

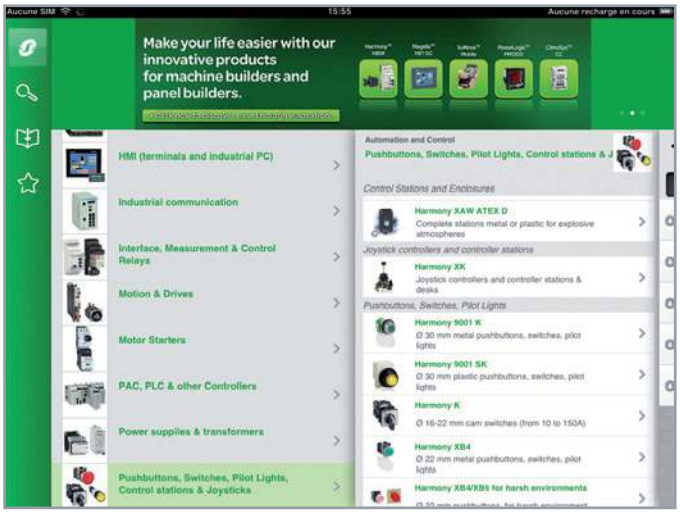

General contents

Altivar 61 variable speed drives 1

Altivar 61 Plus variable speed drives 2

Index of references 3

Contents

1 - Altivar 61 variable speed drives

IP 20 variable speed drive selection guide . . . . . *page 1/2*

IP 54 or IP 55 variable speed drive selection guide . . . . . *page 1/4*

Altivar 61 Plus variable speed drive selection guide . . . . . *page 1/6*

■ **Presentation** ..... ***page 1/8***

■ **Altivar 61 variable speed drives** ..... ***page 1/16***

□ 200…240 V power supply, IP 20 ..... *page 1/16*

□ 380…480 V power supply ..... *page 1/17*
- IP 20 ..... *page 1/17*
- IP20, water-cooled ..... *page 1/18*
- IP 54 ..... *page 1/19*
- IP 54, with Vario switch disconnector ..... *page 1/20*

□ 500…600 V power supply, IP 20 ..... *page 1/21*

□ 500…690 V power supply ..... *page 1/21*
- IP 20 ..... *page 1/21*
- IP 20, water-cooled ..... *page 1/22*

□ Variants ..... *page 1/23*

□ Accessories ..... *page 1/25*

□ Dialogue and configuration tools ..... *page 1/31*

■ **Drive/option combinations** ..... ***page 1/34***

■ **Options** ..... ***page 1/46***

□ Encoder interface cards ..... *page 1/46*

□ I/O expansion cards ..... *page 1/47*

□ Multi-pump card ..... *page 1/48*

□ Controller inside programmable card ..... *page 1/50*

□ Communication buses and networks ..... *page 1/54*

□ Resistance braking units ..... *page 1/60*

□ Braking resistors ..... *page 1/61*

□ Reduction of current harmonics ..... *page 1/64*
- DC chokes ..... *page 1/64*
- line chokes ..... *page 1/66*
- passive filters ..... *page 1/69*
- Active Front End ..... *page 1/76*

□ Additional EMC input filters ..... *page 1/80*

□ Output filters ..... *page 1/82*
- motor chokes ..... *page 1/83*
- sinus filters ..... *page 1/86*

■ **Motor starters** ..... ***page 1/88***

IP 20 or IP 21 variable speed drives for asynchronous and synchronous motors

Type of machine		Simple machines		Pumps and fans (building (HVAC)) *(1)*
Power range for 50…60 Hz (kW/*HP*) line supply		**0.18…4/*0.25...5***	**0.18…15/*0.25...20***	**0.75…75/*1...100***
	Single-phase 100…120 V (kW/*HP*)	0.18…0.75/*0.25...1*	–	–
	Single-phase 200…240 V (kW/*HP*)	0.18…2.2/*0.25...3*	0.18…2.2/*0.25...3*	–
	Three-phase 200…230 V (kW/*HP*)	–	–	–
	Three-phase 200…240 V (kW/*HP*)	0.18…4/*0.25...5*	0.18…15/*0.25...20*	0.75…30/*1...40*
	Three-phase 380…480 V (kW/*HP*)	–	–	0.75…75/*1...100*
	Three-phase 380…500 V (kW/*HP*)	–	0.37…7.5/*0.5...10*	–
	Three-phase 500…600 V (kW/*HP*)	–	–	–
	Three-phase 525…600 V (kW/*HP*)	–	0.75…15/*1...20*	–
	Three-phase 500…690 V (kW/*HP*)	–	–	–
Degree of protection		IP 20	IP 21	
Type of cooling *(2)*		Heatsink or base plate	Heatsink	
Drive	Output frequency	0.1…400 Hz	0.1…500 Hz	0.5…200 Hz
	Type of control – Asynchronous motor	Standard (voltage/frequency) Performance (sensorless flux vector control) Pump/fan (Kn² quadratic ratio)	Standard (voltage/frequency) Performance (sensorless flux vector control) Energy saving ratio	Sensorless flux vector control Voltage/frequency ratio (2 points) Energy saving ratio
	Synchronous motor	–		
	Transient overtorque	150…170% of the nominal motor torque	170…200% of the nominal motor torque	120% of the nominal motor torque
Functions				
Number of functions		40	50	50
Number of preset speeds		8	16	7
Number of I/O	Analog inputs	1	3	2
	Logic inputs	4	6	3
	Analog outputs	1	1	1
	Logic outputs	1	–	–
	Relay outputs	1	2	2
Communication	Integrated	Modbus	Modbus and CANopen	Modbus, METASYS N2, APOGEE FLN, BACnet
	Available as an option	–	CANopen Daisy Chain, DeviceNet, PROFIBUS DP, Modbus TCP, Fipio	LonWorks
Cards (available as an option)		–		
Dialogue tools		IP 54 or IP 65 remote terminal	IP 54 or IP 65 remote terminal IP 54 remote graphic display terminal	IP 54 or IP 65 remote graphic display terminal
Configuration tools	Setup software	SoMove		PCSoft for ATV 212
	Configuration tools	Simple Loader, Multi-Loader		Multi-Loader
Standards and certifications		IEC 61800-5-1 IEC 61800-3 (environments 1 and 2, categories C1 to C3, cat. C1 with option for ATV 212)		
		CE, UL, CSA, C-Tick, NOM, GOST	CE, UL, CSA, DNV, C-Tick, NOM, GOST	EN 55011: Group 1, class A and class B with option card. CE, UL, CSA, C-Tick, NOM
References		**ATV 12**	**ATV 312**	**ATV 212**
Catalogues		"Altivar 12 variable speed drives"	"Altivar 312 variable speed drives"	"Altivar 212 variable speed drives"

(1) Heating, Ventilation and Air Conditioning

More technical information on www.schneider-electric.com

Pumps and fans (industrial)		Complex machines	
0.37…800/*0.5...900*		**0.37…630/*0.5...700***	
–		–	
0.37…5.5/*0.5...7.5*		0.37…5.5/*0.5...7.5*	
–		–	
0.75…90/*1...125*		0.37…75/*0.5...100*	
0.75…630/*1...900*		0.75…500/*1...700*	
–		–	
2.2…7.5/*3...10*		1.5…7.5/*2...10*	
–		–	
2.2…800/*3...800*		1.5…630/*2...700*	
IP 20			
Heatsink or water-cooled system		Heatsink, base plate or water-cooled system	
0.1…500 Hz for the entire range 0.1…599 Hz up to 37 kW/*50 HP* at 200…240 V ∼ and 380…480 V ∼		0.1…500 Hz for the entire range 0.1…599 Hz up to 37 kW/*50 HP* at 200…240 V ∼ and 380…480 V ∼	
Sensorless flux vector control Voltage/frequency ratio (2 or 5 points) Energy saving ratio		Flux vector control with or without sensor Voltage/frequency ratio (2 or 5 points) ENA System	
Vector control without speed feedback		Vector control with or without speed feedback	
120% of the nominal motor torque for 60 seconds		220% of the nominal motor torque for 2 seconds 170% for 60 seconds	
> 100		> 150	
8		16	
2…4		2…4	
6…20		6…20	
1…3		1…3	
0…8		0…8	
2…4		2…4	
Modbus and CANopen			
Modbus TCP Daisy Chain, Modbus/Uni-Telway, EtherNet/IP (RSTP), DeviceNet, PROFIBUS DP V0 and V1, InterBus, CC-Link, LonWorks, METASYS N2, APOGEE FLN, BACnet, Profinet, EtherCAT, POWERLINK		Modbus TCP Daisy Chain, Modbus/Uni-Telway, EtherNet/IP (RSTP), DeviceNet, PROFIBUS DP V0 and V1, InterBus, CC-Link, Profinet, EtherCAT, POWERLINK	
I/O extension cards, "Controller Inside" programmable card, multi-pump cards, encoder interface cards		Interface cards for incremental, resolver, SinCos, SinCos Hiperface®, EnDat® or SSI encoders, I/O extension cards, Controller Inside programmable card	
IP 54 or IP 65 remote graphic display terminal			
SoMove			
Simple Loader, Multi-Loader			
IEC 61800-5-1 IEC 61800-3 (environments 1 and 2, categories C1 to C3), IEC 61000-4-2/4-3/4-4/4-5/4-6/4-11			
CE, UL, CSA, DNV, C-Tick, NOM, GOST			
ATV 61		**ATV 71**	
page 1/16		"Altivar 71 variable speed drives"	

(2) The type of cooling depends on the model. Please consult pages 1/16 to 1/22.

More technical information on www.schneider-electric.com

IP 54 or IP 55 variable speed drives for asynchronous and synchronous motors

Type of machine		Simple machines	Pumps and fans (building (HVAC)) *(1)*
Power range for 50…60 Hz (kW/*HP*) line supply		**0.18…15/*0.25...20***	**0.75…75/*1...100***
	Single-phase 200…240 V (kW/*HP*)	0.18…*2.2/0.25...3*	–
	Three-phase 380…480 V (kW/*HP*)	–	0.75…75/*1...100*
	Three-phase 380…500 V (kW/*HP*)	0.37…15/*0.5...20*	–
Degree of protection		IP 55	IP 55
Variants		Enclosure user-definable up to 4 kW/*5 HP*: Vario switch disconnector, LEDs, selector switch, potentiometer	–
Drive	Output frequency	0.1…500 Hz	0.1…200 Hz
	Type of control – Asynchronous motor	Sensorless flux vector control Voltage/frequency ratio	Sensorless flux vector control Voltage/frequency ratio (2 points) Energy saving ratio
	Type of control – Synchronous motor	–	–
	Transient overtorque	170…200% of the nominal motor torque	120% of the nominal motor torque for 60 seconds
Functions Number of functions		50	50
Number of preset speeds		16	7
Number of I/O	Analog inputs	3	2
	Logic inputs	6	3
	Analog outputs	1	1
	Logic outputs	–	–
	Relay outputs	2	2
Communication	Integrated	Modbus and CANopen	Modbus, METASYS N2, APOGEE FLN, BACnet
	Available as an option	Modbus TCP, Fipio, PROFIBUS DP, DeviceNet	LonWorks
Cards (available as an option)		–	–
Dialogue tools		IP 65 remote terminal	IP 54 or IP 65 remote graphic display terminal
Configuration tools	Setup software	SoMove	PCSoft for ATV 212 drive
	Configuration tool	Simple Loader	Multi-Loader
Standards and certifications		IEC 61800-5-1, IEC 61800-3 (environments 1 and 2, categories C1 to C3) CE, UL, CSA, C-Tick, GOST	
References		**ATV 31C**	**ATV 212W**
Catalogues		"Altivar 31C variable speed drives"	"Altivar 212 variable speed drives"

(1) Heating, Ventilation and Air Conditioning

Pumps and fans (industrial)		Complex machines	
0.75…90/*1...125*		**0.75…75/*1...100***	
–			
0.75…90/*1...125*		0.75…75/*1...100*	
–			
IP 54			
–	Equipped with a Vario switch disconnector	–	Equipped with a Vario switch disconnector
0.1…599 Hz from 0.75 to 45 kW/*1...60 HP* 0.1…500 Hz from 55…90 kW/*75...125 HP*		0.1…599 Hz from 0.75 to 37 kW/*1...50 HP* 0.1…500 Hz from 45 to 75 kW/*60...100 HP*	
Sensorless flux vector control Voltage/frequency ratio (2 or 5 points) Energy saving ratio		Sensorless flux vector control Voltage/frequency ratio (2 or 5 points) ENA System	
Vector control without speed feedback		Vector control with or without speed feedback	
110% of the nominal motor torque for 60 seconds		220% of the nominal motor torque for 2 seconds 170% for 60 seconds	
>100		>150	
8		16	
2…4		2…4	
6…20		6…20	
1…3		1…3	
0…8		0…8	
2…4		2…4	
Modbus and CANopen			
Modbus TCP Daisy Chain, Modbus/Uni-Telway, EtherNet/IP (RSTP), DeviceNet, PROFIBUS DP V0 and V1, InterBus, CC-Link, LonWorks, METASYS N2, APOGEE FLN, BACnet, Profinet, EtherCAT, POWERLINK		Modbus TCP Daisy Chain, Modbus/Uni-Telway, EtherNet/IP (RSTP), DeviceNet, PROFIBUS DP V0 and V1, InterBus, CC-Link, Profinet, EtherCAT, POWERLINK	
I/O extension cards, "Controller Inside" programmable card, multi-pump cards, encoder interface cards		Interface cards for incremental, resolver, SinCos, SinCos Hiperface®, EnDat® or SSI encoders, I/O extension cards, Controller Inside programmable card	
IP 54 or IP 65 remote graphic display terminal			
SoMove			
Simple Loader, Multi-Loader			
IEC 61800-5-1, IEC 61800-3 (environments 1 and 2, categories C1 to C3), IEC 61000-4-2/4-3/4-4/4-5/4-6/4-11 CE, UL, CSA, DNV, C-Tick, NOM, GOST			
ATV 61W	**ATV 61E5**	**ATV 71W**	**ATV 71E5**
pages 1/19 and 1/20		"Altivar 71 variable speed drives"	

Variable speed drives
Altivar 61 Plus and Altivar 71 Plus
Integrated solutions

Type of machine	Pumps and fans (industrial)		
Power range for 50…60 Hz (kW/*HP*) line supply	**90…630/*125...900***	**90…800/*125...900***	**630…2400/*800...2500***
Three-phase 380…415 V (kW)	90...630	90...630	630...1400
Three-phase 480 V *(HP)*	*125...900*	*125...900*	*900...2000*
Three-phase 500 V (kW)	–	90...630	630...1800
Three-phase 600 V *(HP)*	–	*125...800*	*800...2500*
Three-phase 690 V (kW)	–	110...800	800...2400
Main characteristics	With enhanced protection		With enhanced protection and integrated cooling circuit
Variants	Ready to use	Standard offer Modular with integrated options User-definable on request	
Low Harmonic	–	Yes, only for ATV 61 Plus - LH	
Drive – Output frequency	0.1...500 Hz		
Drive – Type of control – Asynchronous motor	Sensorless flux vector control Voltage/frequency ratio 2 or 5 points Energy saving ratio		
Drive – Type of control – Synchronous motor	Flux vector control without speed feedback		
Drive – Transient overtorque	120% of the nominal motor torque for 60 seconds		
Communication – Embedded	Modbus and CANopen		
Communication – As an option	Modbus TCP, Modbus/Uni-Telway, EtherNet/IP, DeviceNet, PROFIBUS DP V0 and V1, InterBus, CC-Link LonWorks, METASYS N2, APOGEE FLN, BACnet		
Cards (available as an option)	"Controller Inside" programmable card Multi-pump cards		
Degree of protection	IP 54 with separate air flows, **ATV61ES5**	IP 23 compact version, **ATV61EXC2** IP 54 compact version, **ATV61EXC5** IP 54 with separate air flows, **ATV61EXS5**	With integrated air-cooled circuit: IP 23: **ATV61EXA2** IP 54: **ATV61EXA5** With external water-cooled system: IP 55, on request
Type of drive	**ATV 61 Plus**	**ATV 61 Plus / ATV 61 Plus - LH**	
Catalogues	page 2/2		

Complex machines (industrial and infrastructure)		
90…500/*125...700*	**90…630/*125...700***	**500…2000/*550...2100***
90…500	90…500	500…1300
125...700	*125...700*	*550...1800*
–	90…500	500…1500
–	*125...700*	*700...2100*
–	110…630	630…2000
With enhanced protection		With enhanced protection and integrated cooling circuit
Ready to use	Standard offer Modular with integrated options User-definable on request	
–	Yes, for power regeneration to the mains supply, only for ATV 71 Plus - LH	
0.1…500 Hz		
Flux vector control with or without sensor Voltage/frequency ratio (2 or 5 points) ENA System		
Vector control with or without speed feedback		
220% of the nominal motor torque for 2 seconds 170% of the nominal motor torque for 60 seconds		
Modbus and CANopen		
Modbus TCP, Modbus/Uni-Telway, EtherNet/IP, DeviceNet, PROFIBUS DP V0 and V1, InterBus, CC-Link		
"Controller Inside" programmable card		
IP 54 with separate air flows, **ATV71ES5**	IP 23 compact version, **ATV71EXC2** IP 54 compact version, **ATV71EXC5** IP 54 with separate air flows, **ATV71EXS5**	IP 23, with integrated air-cooled circuit, **ATV71EXA2** IP 54, with integrated air-cooled circuit, **ATV71EXA5** IP 55, with external water-cooled system (on request)
ATV 71 Plus	**ATV 71 Plus / ATV 71 Plus - LH**	
"Altivar 71 and Altivar 71 Plus variable speed drives"		

Variable speed drives
Altivar 61

ATV61HC31N4,
ATV61HD22M3X, ATV61HU22N4

PF095495

ATV61W075N4,
ATV61W075N4C

PF095305

ATV61EXS5●●●●●

Presentation

The Altivar 61 drive is a frequency inverter for 0.75 kW/*1 HP* to 2400 kW three-phase synchronous and asynchronous motors.

It has been designed for common fluid management applications in industrial and commercial buildings and infrastructures.

The Altivar 61 can increase the performance of equipment and reduce operating costs in buildings by optimizing energy consumption whilst improving user comfort.

Environmentally-friendly and energy-saving

The drive is designed to be environmentally-friendly:
- Energy saving with a reduction in energy consumption of 70 % for ventilation applications and 50 % for pumping applications
- Reduction of fluid losses in distribution networks
- Use of 80 % recyclable materials - the Altivar 61 drive conforms to environmental standard ISO 14040 which defines a critical analysis of the product's impact on the environment

An environmental report is available for the Altivar 61 drive on our website www.schneider-electric.com.

Compliance with international standards and certifications

The Altivar 61 drive has been developed to meet the requirements of directives regarding the protection of the environment (RoHS, REACH, WEEE, etc.) as well as those of European Directives to obtain the CE mark.

The entire range is UL, CSA, DNV, C-Tick, NOM and GOST certified and conforms to international standards relating to electrical industrial control equipment IEC/EN 61800-2 and IEC/EN 61800-5-1.

The need for electromagnetic compatibility was taken into account at the outset when designing the drive. The entire range conforms to international standard IEC/EN 61800-3.
The Altivar 61 drive complies with the requirements of safety standards for applications in explosive atmospheres (ATEX). Please refer to the ATEX guide which is available on our website www.schneider-electric.com.

An extensive range

The Altivar 61 range offers numerous variants to meet the requirements of applications in a wide variety of fields and in very harsh environments.
With these variants, the Altivar 61 range offers ready-to-use or modular solutions that can adapt to your needs.

Its numerous and comprehensive options enable it to be adapted and incorporated into electrical installations, sophisticated control systems, infrastructures and building management systems. They also create significant energy savings and reduce line interference.

A specific option, the Active Front End, enables the Altivar 61 to be used in installations where particularly low harmonic levels are required. It also allows the Altivar 61 drive to operate on unstable line supplies.

Variable speed drives: page 1/16
Variants: page 1/23
Accessories: page 1/25
Options: page 1/46
Drive/option combinations: page 1/34

PF095308

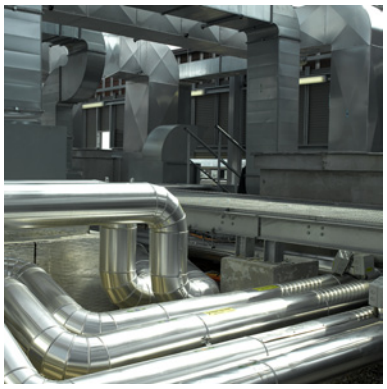

Air treatment application

PF108971

Air purification application

PF095309

Water treatment application

A wide range of applications

The Altivar 61 drive incorporates advanced functions for optimum efficiency in the majority of applications in the industrial or commercial buildings sector:
- Ventilation
- Air conditioning
- Air purification, smoke extraction
- Fluid management
- Pumping and booster stations
- Irrigation stations
- Off-shore drilling rigs
- Etc.

Advanced functions

The Altivar 61 drive meets stringent requirements due to its numerous integrated application functions, while helping ensure the reliability of equipment with its protection and safety functions.

Functions designed specifically for pump and fan applications

- Energy saving ratio, 2 or 5 point quadratic ratio
- Automatic catching a spinning load with speed detection
- Adaptation of current limiting according to speed
- Noise and resonance suppression due to the possibility of adjusting the switching frequency during operation up to 16 kHz depending on the rating and the possibility of making frequency skips
- Preset speeds
- Integrated PID regulator with preset PID references and automatic/manual (Auto/Man.) mode
- Electricity and service hours meter
- Fluid absence detection, zero flow and limited flow detection
- Sleep function, wake-up function
- Customer settings with display of physical measurements (bar, l/s, °C, etc.)

Protection functions

- Motor and drive thermal protection, PTC thermal probe management
- Protection against overloads and overcurrents in continuous operation
- Machine mechanical protection via skip frequency function, output phase rotation
- Protection of the installation by means of underload, overload and zero flow detection
- Protection via management of multiple faults and configurable alarms

Safety functions

- Machine safety via the integrated Power Removal function

This function stops the motor and helps preventing accidental restarts; it complies with machine safety standard ISO 1389-1, category 3 and the standard for functional safety IEC/EN 61508, SIL2 capability (safety control-signalling applied to processes and systems).
This safety function means that the drive can be installed as part of the safety system for an Electrical/Electronic/Programmable Electronic control system relating to the safety of a machine or industrial process.
- Means of the forced operation function with configurable fault inhibiting, direction of operation and references help ensure installation safety.

1

An open-ended offer to adapt to your applications

The Altivar 61 and Altivar 61 Plus offers cover motor power ratings from 0.75 kW/ *1 HP* to 2400 kW with several types of power supply:

Three-phase power supply	Motor power	Reference
200...240 V	0.75 kW…90 kW/ *1 HP...125 HP*	**ATV61H●●●M3** **ATV61H●●●M3X**
380...415 V	55 kW…630 kW/ *75 HP...900 HP*	**ATV61EXC●●●●N4H**
	90 kW…630 kW/ *125 HP...900 HP*	**ATV61ES5●●●N4** **ATV61EXS5●●●N4** **ATV61EXC●●●●N4**
	630 kW…1400 kW	**ATV61EXA●●●●N4**
380...480 V	0.75 kW…630 kW/ *1 HP...900 HP*	**ATV61H●●●N4**
	0.75 kW…90 kW/ *1 HP...125 HP*	**ATV61W●●●N4** **ATV61W●●●N4C**
	110 kW…630 kW/ *150 HP...900 HP*	**ATV61Q●●●N4**
500 V	90 kW…630 kW/ *125 HP...800 HP*	**ATV61EXS5●●●N** **ATV61EXC●●●●N**
	630 kW…1800 kW	**ATV61EXA●●●●N**
500...600 V	1.5 kW…15 kW/ *2 HP...20 HP*	**ATV61H●●●S6X**
500...690 V	2.2 kW…800 kW/ *3 HP...800 HP*	**ATV61H●●●Y**
	110 kW…630 kW/ *150 HP...800 HP*	**ATV61Q●●●Y**
690 V	110 kW…800 kW/ *125 HP...800 HP*	**ATV61EXC●●●●Y** **ATV61EXS5●●●Y**
	800 kW…2400 kW	**ATV61EXA●●●●Y** **ATV61EXA●●●●YH**

Altivar 61 drives with 200…240 V three-phase supply voltage can also be used with motor power ratings from 0.37 kW/*0.5 HP* to 5.5 kW/*7.5 HP* single-phase, if the motor is derated.

537174

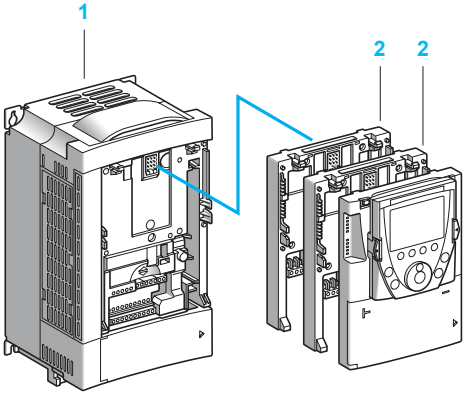

Extended functions using option cards

Flexibility in control systems and building management systems

The Altivar 61 drive 1 has numerous logic and analog inputs and outputs that can be configured to adapt better to applications.
Its functions can be extended by using I/O expansion cards 2 (see page 1/47).

It includes the Modbus and CANopen protocols as standard to enhance the performance of your control systems.
It is open to other control system architectures for industry and and integrates easily into building management systems (HVAC) using communication option cards 2 (see page 1/54).

Most communication protocols for use in industry (Modbus TCP, Ethernet/IP, Modbus/ Uni-Telway, PROFIBUS DP V0 or V1, DeviceNet, InterBus, CC-Link and Ethernet POWERLINK) or in building management (LonWorks, METASYS N2, APOGEE FLN, BACnet) are available.

It can be open to a distributed architecture by using a Controller Inside programmable card 2 which allows the drive to be adapted to specific applications, quickly and in an open-ended manner, by decentralizing the control system functions (programming in IEC 61131-3 compliant languages) (see pages 1/50 to 1/53).

It can also be used to manage several pumps using multi-pump cards 2 (see pages 1/48 and 1/49).

The Controller Inside and multi-pump cards have their own I/O and can manage the drive's I/O as well as those of the I/O expansion cards. They can also use drive parameters such as speed, current, torque, etc.
The Altivar 61 drive can also take an encoder interface card to increase the safety of the application (see page 1/46).

Note: *The Altivar 61 can accommodate a maximum of two option cards simultaneously; please refer to the summary table of possible combinations to find out which options are available for each drive (see pages 1/34 to 1/45).*

An open-ended offer to adapt to your applications (continued)

Electromagnetic compatibility (EMC)

The need for electromagnetic compatibility was taken into account at the outset when designing the drive.

The incorporation of EMC filters in **ATV61H●●●M3**, **ATV61●●●●N4** and **ATV61●●●●Y** drives and the observance of requirements in respect of EMC simplifies installation and provides economical means of helping ensuring that equipment meets CE marking requirements.

ATV61W●●●N4C drives have integrated EMC filters, which make them compliant with the requirements of EN 55011 (class B group 1) and IEC/EN 61800-3 (category C1) standards.

ATV61H●●●M3X, **ATV61H●●●S6X** and **ATV61Q●●●●●** drives have been designed without an EMC filter. Filters are available as an option and can be installed by the customer to reduce the level of emissions (see page 1/78).

A wide range of options

A large number of external options can be combined with the Altivar 61:

■ Braking units and resistors (see pages 1/60 to 1/63)

■ DC chokes, line chokes and passive filters (see pages 1/64 to 1/75) and the Active Front End option for reducing current harmonics (see pages 1/76 to 1/79)

■ Additional EMC input filters for reducing conducted emissions on the line (see pages 1/80 and 1/81)

■ Motor chokes and sinus filters for long cable runs or to remove the need for shielding (see pages 1/83 to 1/87)

Mounting options

The Altivar 61 drive can be mounted in a variety of ways to adapt to the various needs of an installation.

Mounting without an enclosure

The Altivar 61 drive can be mounted directly on a wall without having to be installed inside an enclosure. UL Type 1 conformity can be achieved by using kit **VW3A92●●**, or IP 21 or IP 31 conformity with kit **VW3A91●●** (see pages 1/26 and 1/27).

Flush-mounting in dust and damp proof enclosure

The Altivar 61 drive has been designed to reduce the size of enclosures (floor-standing, wall-mounted, etc.).

Flush-mounting kit **VW3A95●●** makes it possible to mount the power section outside the enclosure and limit the temperature rise inside the enclosure (see page 1/25). This variant also allows side-by-side mounting, if operating conditions require it.

537172

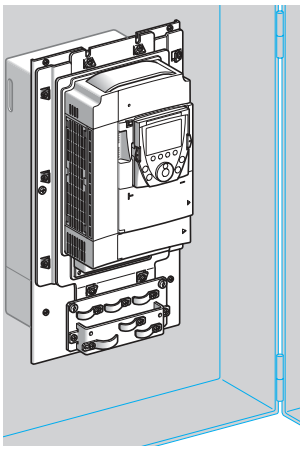

ATV61HU75N4 flush-mounted

1

PF095310

Altivar 61 drive equipped with a Vario switch disconnector

Solutions for many environments

The offer includes numerous variants which make it possible to further broaden the Altivar 61 drive's range of applications.
It is designed to meet the requirements of each application as closely as possible, and offers ready-to-use or modular solutions.

Reinforced version variant

This reinforced version variant enables the Altivar 61 drive to be used for applications in difficult ambient pollution conditions (see page 1/23).

Variant with Vario switch disconnector

IP 54 Altivar 61 drives can be supplied equipped with a Vario switch disconnector. This ready-equipped offer, **ATV61E5●●●N4**, is specially designed for applications that require an accessible drive as close as possible to the motor (such as in fluid, waste water and air treatment applications).

It covers motor power ratings from 0.75 kW/*1 HP* to 90 kW/*125 HP* (see page 1/20).

Variant for medium voltage motors

This variant enables the Altivar 61 drive to be used for applications involving medium voltage motors (see page 1/24).

Variant for industrial environments and infrastructure

To facilitate set-up in industrial environments and infrastructure contexts (such as tunnels, subways, smoke extraction and pumping), an enclosed drive solution is available, enhanced by a wide range of options.

Altivar 61 Plus drive in IP 23 or IP 54 ready-assembled, compact floor-standing enclosure

This enclosed drive solution (**ATV61EXC●●●●●**) provides IP 23 or IP 54 protection. It is supplied ready-assembled and ready to connect. A common air circuit provides enclosure ventilation.

In addition to a standard version, a modular version is available with a choice of options to suit the requirements of your installation.

The offer covers a range of drives from 90 kW/*125 HP* to 800 kW/*800 HP* (see page 2/12).

Altivar 61 Plus variant with harmonic filtering in "ready to use" IP 23 or IP 54 floor-standing enclosure

Variant for applications requiring a very low harmonic level

Altivar 61 Plus drive with harmonic filtering in "Ready to use" IP 23 or IP 54 floor-standing enclosure

This enclosed product has been designed to offer, in a compact "ready-to-use" version, a range of drives designed to meet the requirements of applications requiring very low harmonic distortion factors (THDI ⩽ 5 %).

This enclosed drive solution provides, depending on the model, degree of protection IP 23 **(ATV61EXC2●●●N4H** and **ATV61EXA2●●YH)** or IP 54 **(ATV61EXC5●●●N4H** and **ATV61EXA5●●YH)**.

In addition to a standard version, a modular version is available with a choice of options to suit the requirements of your installation.

The offer covers a range of drives from 55 kW/*75 HP* to 2400 kW (see pages 2/6 and 2/7).

PF107559

Pre-equipped IP 54 kit

PF095305

Altivar 61 Plus variant
in "ready to use" IP 54 floor-standing enclosure

PF095307

Altivar 61 Plus variant
in an IP 23 or IP 54 enclosure with separate air flows

Solutions for many environments (continued)

Variant for environments requiring greater ruggedness

Water-cooled Altivar 61 drive

With their internal water-cooled system, Altivar 61Q (**ATV61Q●●●N4** and **ATV61Q●●●Y**) drives represent the optimum solution for applications in which rugged versions are essential.

The integrated water-cooled system circuit can dissipate heat at its source and hence offers optimum integration of the whole electrical control system. Evacuation of thermal losses by this system also avoids the need to install an expensive air conditioning system.
The Altivar 61Q offer is also well suited to frequent start-up applications.

It covers motor power ratings between 110 kW/*150 HP* and 630 kW/*900 HP* (see pages 1/18 and 1/22).

These variants offer enclosed drive solutions with cooling systems specially designed to allow the Altivar 61 drive to operate in difficult environmental conditions.

Variants for harsh and highly polluted environments

These variants offer enclosed drive solutions with cooling systems specially designed to allow the Altivar 61 drive to operate in difficult environmental conditions.

Pre-equipped IP 54 kit

This straightforward and cost-effective solution, which is available by quoting a single reference, provides you with the mechanical components you need to create an IP 54 certified floor-standing enclosure (**VW3A9541**…**VW3A9551**) (see page 2/2).

The cooling systems enable the equipment to be installed in a variety of difficult environments (1 or 3 air circuits, depending on the model).
The overall dimensions, reduced to a minimum, allow assembly in extremely confined spaces.

The kit is available for IP 20 Altivar 61 drives from 110 kW/*150 HP* to 630 kW/*900 HP* (see page 2/2).

Altivar 61 Plus drive in "ready-to-use" IP 54 floor-standing enclosure

This enclosed drive solution (**ATV61ES5●●●N4**) provides IP 54 protection. It is supplied ready-assembled and ready to connect. Two separate cooling circuits help ensure optimum enclosure ventilation.

The offer covers a range of drives from 90 kW/*125 HP* to 630 kW/*900 HP* (see page 2/4).

Altivar 61 Plus drive in IP 23 or IP 54 floor-standing enclosure with separate air flows

These floor-standing enclosures are designed to operate in harsh and highly polluted environments, by using two separate cooling circuits, one for the control section and one for the power section, to optimize enclosure ventilation.

Depending on the model, they provide IP 54 protection (**ATV61EXS5●●●●**) and IP 23 or IP 54 (**ATV61EXA●●●●●**).

It includes a standard version, a modular version via the addition of numerous options and a fully customizable version to suit your requirements.

The offer covers a range of drives from 90 kW/*125 HP* to 630 kW/*900 HP* (**ATV61EXS5●●●●**) and 630 kW to 2400 kW (**ATV61EXA●●●●●**) (see page 2/8).

1

Dialogue and configuration tools for Altivar 61 drive

537166

RUN	Term	+50.00Hz	5.4A
1.1 SIMPLY START			
Cde 2 fils/3 fils	:		**Cde 2 fils**
Macro-configuration	:		Manutention
Standard fréq. mot	:		50Hz IEC
Puissance nom. mot	:		2.2kW
Tension nom. mot	:		400V
Code	<<	>>	Quick

Simply Start menu

Dialogue and configuration tools

Remote graphic display terminal

The Altivar 61 drive **1** is supplied with a remote graphic display terminal **3**.

This terminal provides a user-friendly interface with fast and easy access, on-line help screens, text in the user's language (8 languages factory-installed, plus others available via flash memory). It can be customized for the user or the machine.
The advanced functions on the display unit allow easy access to the more complex configuration, setup or maintenance functions.

It can be located remotely on an enclosure door with IP 54 or IP 65 degree of protection on IP 20 drives, or built-in on IP 54 drives.
See page 1/33.

SoMove Mobile Software

SoMove Mobile software **2** is particularly suitable for maintenance operations.
It can be used to edit the drive parameters from a mobile phone, save configurations, import them from a PC and export them to a PC via a Bluetooth® wireless connection.
See page 1/33.

SoMove setup software

SoMove setup software for PC **4** is used to configure, adjust and debug the Altivar 61 drive with the Oscilloscope function, as well as for drive maintenance, in the same way as for other Schneider Electric drives and starters.

See page 1/33.

Simple Loader and Multi-Loader configuration tools

The Simple Loader tool **6** enables the configuration from one powered-up drive to be duplicated on another powered-up drive.

The Multi-Loader tool **5** enables configurations from a PC or drive to be copied and duplicated on another drive; Altivar 61 drives must be powered up.
See page 1/33.

Quick programming tools

With its macro-configurations and its Simply Start menu, the Altivar 61 drive gets applications up and running immediately.

Macro-configuration
The Altivar 61 drive offers quick and easy programming using macro-configurations corresponding to different applications or uses: start-stop, pumping and ventilation, general use, connection to communication networks, PID regulator.
Each of these configurations is still fully modifiable.

Simply Start menu
The Simply Start menu can be used to help ensure that the application is working correctly, maximize motor performance and help ensure motor protection.

The architecture, the hierarchical parameter structure and the direct access functions serve to make programming quick and easy, even for the more complex functions.

537165

RUN	Term	+50.00Hz	5.4A
1.1 SIMPLY START			
Cde 2 fils/3 fils	:		**Cde 2 fils**
Macro-configuration	:		Manutention
Standard fréq. mot	:		50Hz IEC
Puissance nom. mot	:		2.2kW
Tension nom. mot	:		400V
Code	<<	>>	Quick

Built-in function: fault log

Integrated functions for maintenance, monitoring and diagnostics

The Altivar 61 has numerous built-in maintenance, monitoring and diagnostic functions.
The option of powering the control part separately enables communication to be maintained (monitoring, diagnostics) even if there is no power supply to the power part.

Example of functions:
- Drive test functions with diagnostic screen on the remote graphic display terminal
- I/O maps
- Communication maps for the different ports
- Oscilloscope function that can be viewed using the SoMove setup software
- Management of the drive installed base via microprocessors with flash memory
- Remote use of these functions by connecting the drive to a modem via the Modbus port
- Identification of the drive's component parts as well as the software versions
- Fault logs with display of the value of up to 16 variables on occurrence of a fault
- Downloading languages to the terminal via flash memory
- Storage of a 5-line, 24-character message in the drive

Variable speed drives

Altivar 61

Supply voltage 200...240 V 50/60 Hz

PF107573

ATV61H075M3

PF107574

ATV61HU22M3Z

PF107581

ATV61HD22M3X

IP 20 drives

Motor		Line supply				Altivar 61			
Power indicated on rating plate *(1)*		Line current *(2)*		Apparent power	Max. prospective line Isc	Maximum continuous current *(1)*	Max. transient current for 60 s	Reference	Weight
		200 V	240 V	240 V		230 V			
kW	*HP*	A	A	kVA	kA	A	A		kg
Single-phase supply voltage: 200…240 V 50/60 Hz									
0.37	*0.5*	6.9	5.8	1.4	5	3	3.6	**ATV61H075M3**	3.000
0.75	*1*	12	9.9	2.4	5	4.8	5.7	**ATV61HU15M3**	3.000
1.5	*2*	18.2	15.7	3.7	5	8	9.6	**ATV61HU22M3**	4.000
2.2	*3*	25.9	22.1	5.3	5	11	13.2	**ATV61HU30M3**	4.000
3	–	25.9	22	5.3	5	13.7	16.4	**ATV61HU40M3** *(3)*	4.000
4	*5*	34.9	29.9	7	5	17.5	21	**ATV61HU55M3** *(3)*	5.500
5.5	*7.5*	47.3	40.1	9.5	22	27.5	33	**ATV61HU75M3** *(3)*	7.000
Three-phase supply voltage: 200…240 V 50/60 Hz									
0.75	*1*	6.1	5.3	2.2	5	4.8	5.7	**ATV61H075M3**	3.000
1.5	*2*	11.3	9.6	4	5	8	9.6	**ATV61HU15M3**	3.000
2.2	*3*	15	12.8	5.3	5	11	13.2	**ATV61HU22M3**	4.000
3	–	19.3	16.4	6.8	5	13.7	16.4	**ATV61HU30M3**	4.000
4	*5*	25.8	22.9	9.5	5	17.5	21	**ATV61HU40M3**	4.000
5.5	*7.5*	35	30.8	12.8	22	27.5	33	**ATV61HU55M3**	5.500
7.5	*10*	45	39.4	16.4	22	33	39.6	**ATV61HU75M3**	7.000
11	*15*	53.3	45.8	19	22	54	64.8	**ATV61HD11M3X** *(4)*	22.000
15	*20*	71.7	61.6	25.6	22	66	79.2	**ATV61HD15M3X** *(4)*	22.000
18.5	*25*	77	69	28.7	22	75	90	**ATV61HD18M3X** *(4)*	30.000
22	*30*	88	80	33.3	22	88	105.6	**ATV61HD22M3X** *(4)*	30.000
30	*40*	124	110	45.7	22	120	144	**ATV61HD30M3X** *(4)*	37.000
37	*50*	141	127	52.8	22	144	172.8	**ATV61HD37M3X** *(4)*	37.000
45	*60*	167	147	61.1	22	176	211.2	**ATV61HD45M3X** *(4)*	37.000
55	*75*	200	173	71.9	35	221	265.2	**ATV61HD55M3X** *(4)*	84.000
75	*100*	271	232	96.4	35	285	342	**ATV61HD75M3X** *(4)*	84.000
90	*125*	336	288	119.7	35	359	431	**ATV61HD90M3X** *(4)*	106.000

Dimensions (overall)

Drives	W x H x D mm
ATV61H075M3, HU15M3	130 x 230 x 175
ATV61HU22M3…HU40M3	155 x 260 x 187
ATV61HU55M3	175 x 295 x 187
ATV61HU75M3	210 x 295 x 213
ATV61HD11M3X, HD15M3X	230 x 400 x 213
ATV61HD18M3X, HD22M3X	240 x 420 x 236
ATV61HD30M3X…HD45M3X	320 x 550 x 266
ATV61HD55M3X, HD75M3X	320 x 920 x 377
ATV61HD90M3X	360 x 1022 x 377

(1) These values are given for a nominal switching frequency of 12 kHz up to ATV61HD45M3X or 2.5 kHz for ATV61HD55M3X…HD90M3X drives for use in continuous operation.
The switching frequency is adjustable from 1…16 kHz up to ATV61HD45M3X, from 2.5…12 kHz for ATV61HD55M3X and from 2.5…8 kHz for ATV61HD75M3X, HD90M3X.
Above 2.5 or 12 kHz, depending on the rating, the drive will reduce the switching frequency automatically in the event of an excessive temperature rise. For continuous operation above the nominal switching frequency, derate the nominal drive current, see derating curves on our website www.schneider-electric.com.
(2) Typical value for the indicated motor power and for the maximum prospective line Isc.
(3) A line choke must be used (see page 1/67).
(4) Drive supplied without EMC filter. EMC filters are available as an option (see page 1/81).

***Note:** Consult the summary tables of possible drive, option and accessory combinations (see pages 1/34, 1/35, 1/44 and 1/45).*

Variants: page 1/23
Accessories: page 1/25
Dialogue: page 1/31
Drive/option combinations: page 1/34

Schneider Electric

Variable speed drives

Altivar 61

Supply voltage 380...480 V 50/60 Hz

PF107483

ATV61HU22N4

PF107575

ATV61HU40N4Z

PF107586

ATV61HC31N4

IP 20 drives with integrated category C2 or C3 EMC filter

Motor		Line supply				Altivar 61				
Power indicated on rating plate (1)		Line current (2)		Apparent power	Max. prospective line Isc	Maximum continuous current (1)		Max. transient current for 60 s	Reference	Weight
		380 V	480 V	380 V		380 V (IEC)	460 V (NEC)			
kW	HP	A	A	kVA	kA	A		A		kg
Three-phase supply voltage: 380…480 V 50/60 Hz										
0.75	1	3.7	3	2.4	5	2.3	2.1	2.7	**ATV61H075N4**	3.000
1.5	2	5.8	5.3	3.8	5	4.1	3.4	4.9	**ATV61HU15N4**	3.000
2.2	3	8.2	7.1	5.4	5	5.8	4.8	6.9	**ATV61HU22N4**	3.000
3	–	10.7	9	7	5	7.8	6.2	9.3	**ATV61HU30N4**	4.000
4	5	14.1	11.5	9.3	5	10.5	7.6	12.6	**ATV61HU40N4**	4.000
5.5	7.5	20.3	17	13.4	22	14.3	11	17.1	**ATV61HU55N4**	5.500
7.5	10	27	22.2	17.8	22	17.6	14	21.1	**ATV61HU75N4**	5.500
11	15	36.6	30	24.1	22	27.7	21	33.2	**ATV61HD11N4**	7.000
15	20	48	39	31.6	22	33	27	39.6	**ATV61HD15N4**	22.000
18.5	25	45.5	37.5	29.9	22	41	34	49.2	**ATV61HD18N4**	22.000
22	30	50	42	32.9	22	48	40	57.6	**ATV61HD22N4**	30.000
30	40	66	56	43.4	22	66	52	79.2	**ATV61HD30N4**	37.000
37	50	84	69	55.3	22	79	65	94.8	**ATV61HD37N4**	37.000
45	60	104	85	68.5	22	94	77	112.8	**ATV61HD45N4**	44.000
55	75	120	101	79	22	116	96	139.2	**ATV61HD55N4**	44.000
75	100	167	137	109.9	22	160	124	192	**ATV61HD75N4**	44.000
90	125	166	143	109.3	35	179	179	214.8	**ATV61HD90N4**	84.000
110	150	202	168	133	35	215	215	258	**ATV61HC11N4**	84.000
132	200	239	224	157.3	35	259	259	310.8	**ATV61HC13N4**	106.000
160	250	289	275	190.2	50	314	314	376.8	**ATV61HC16N4**	116.000
200	300	357	331	235	50	427	427	512.4	**ATV61HC22N4**	163.000
220	350	396	383	260.6	50					
250	400	444	435	292.2	50	481	481	577.2	**ATV61HC25N4**	207.000
280	450	494	494	325.1	50	616	616	739.2	**ATV61HC31N4**	207.000
315	500	555	544	365.3	50					
355	–	637	597	419.3	50	759	759	910.8	**ATV61HC40N4**	320.000
400	600	709	644	466.6	50					
500	700	876	760	576.6	50	941	941	1129.2	**ATV61HC50N4**	330.000
560	800	978	858	643.6	50	1188	1188	1425.6	**ATV61HC63N4**	435.000
630	900	1091	964	718	50					

Dimensions (overall)

Drives	W x H x D mm
ATV61H075N4…HU22N4	130 x 230 x 175
ATV61HU30N4, HU40N4	155 x 260 x 187
ATV61HU55N4, HU75N4	175 x 295 x 187
ATV61HD11N4	210 x 295 x 213
ATV61HD15N4, HD18N4	230 x 400 x 213
ATV61HD22N4	240 x 420 x 236
ATV61HD30N4, HD37N4	240 x 550 x 266
ATV61HD45N4…HD75N4	320 x 630 x 290
ATV61HD90N4, HC11N4	320 x 920 x 377
ATV61HC13N4	360 x 1022 x 377
ATV61HC16N4	340 x 1190 x 377
ATV61HC22N4	440 x 1190 x 377
ATV61HC25N4, HC31N4	595 x 1190 x 377
ATV61HC40N4, HC50N4	890 x 1390 x 377
ATV61HC63N4	1120 x 1390 x 377

(1) These values are given for a nominal switching frequency of 12 kHz up to ATV61HD75N4, 4 kHz for ATV 61HD90N4 or 2.5 kHz for ATV61HC11N4…HC63N4 drives for use in continuous operation. The switching frequency is adjustable from 1…16 kHz up to ATV61HD75N4 and from 2…8 kHz for ATV61HD90N4…ATV61HC63N4.
Above 2.5, 4 or 12 kHz, depending on the rating, the drive will reduce the switching frequency automatically in the event of an excessive temperature rise. For continuous operation above the nominal switching frequency, derate the nominal drive current (see derating curves on our website www.schneider-electric.com).

(2) Typical value for the indicated motor power and for the maximum prospective line Isc.

***Note:** Consult the summary tables of possible drive, option and accessory combinations (see pages 1/36, 1/37, 1/44 and 1/45).*

Variable speed drives

Altivar 61

Supply voltage 380...480 V 50/60 Hz

PF110500

ATV61QC11N4

Water-cooled IP 20 drives

Motor		Line supply				Altivar 61				
Power indicated on rating plate (1)		Line current (2)		Apparent power	Max. prospective line Isc	Maximum continuous current (1)		Max. transient current for 60 s	Reference	Weight
		380 V	480 V	380 V		380 V (IEC)	460 V (NEC)			
kW	HP	A	A	kVA	kA	A		A		kg
Three-phase supply voltage: 380…480 V 50/60 Hz										
110	*150*	202	168	133	35	215	215	258	**ATV61QC11N4**	80.000
132	*200*	239	224	157.3	35	259	259	310.8	**ATV61QC13N4**	80.000
160	*250*	289	275	190.2	50	314	314	376.8	**ATV61QC16N4**	80.000
200	*300*	357	331	235	50	387	387	464	**ATV61QC20N4**	140.000
220	*350*	396	383	260.6	50	481	481	577.2	**ATV61QC25N4**	140.000
250	*400*	444	435	292.2	50					
280	*450*	494	494	325.1	50	616	616	739.2	**ATV61QC31N4**	140.000
315	*500*	555	544	365.3	50					
355	–	637	597	419.3	50	759	759	910.8	**ATV61QC40N4**	300.000
400	*600*	709	644	466.6	50					
500	*700*	876	760	576.6	50	941	941	1129.2	**ATV61QC50N4**	300.000
560	*800*	978	858	643.6	50	1188	1188	1425.6	**ATV61QC63N4**	300.000
630	*900*	1091	964	718	50					

Dimensions (overall)

Drive	W x H x D mm
ATV61QC11N4…QC16N4	330 x 950 x 377
ATV61QC20N4…QC31N4	585 x 950 x 377
ATV61QC40N4…QC63N4	1110 x 1150 x 377

(1) These values are given for a nominal switching frequency of 2.5 kHz, for use in continuous operation.
The switching frequency is adjustable from 2.5…8 kHz.
Above 2.5 kHz, the drive will reduce the switching frequency automatically in the event of excessive temperature rise. For continuous operation above the nominal switching frequency, derate the nominal drive current (see derating curves on our website www.schneider-electric.com).

(2) Typical value for the indicated motor power and for the maximum prospective line Isc.

***Note:** Consult the summary tables of possible drive, option and accessory combinations (see pages 1/36, 1/37, 1/44 and 1/45).*

Variants: page 1/23
Accessories: page 1/25
Dialogue: page 1/31
Drive/option combinations: page 1/34

Schneider Electric

Variable speed drives

Altivar 61

Supply voltage 380...480 V 50/60 Hz

PF107495

ATV61W075N4

PF107493

ATV61WD30N4

Motor		Line supply				Altivar 61				
Power indicated on rating plate (1)		Line current (2)		Apparent power	Max. prospective line Isc	Maximum continuous current (1)		Max. transient current for 60 s	Reference	Weight
		380 V	480 V	380 V		380 V (IEC)	460 V (NEC)			
kW	HP	A	A	kVA	kA	A		A		kg
IP 54 drives with integrated category C2 EMC filter										
Three-phase supply voltage: 380…480 V 50/60 Hz										
0.75	1	1.8	1.5	1.2	5	2.3	2.1	2.5	**ATV61W075N4**	13.000
1.5	2	3.5	3	2.3	5	4.1	3.4	4.5	**ATV61WU15N4**	13.000
2.2	3	5	4.1	3.3	5	5.1	4.8	5.6	**ATV61WU22N4**	13.000
3	–	6.7	5.6	4.4	5	7.2	6.2	7.9	**ATV61WU30N4**	14.000
4	5	8.8	7.4	5.8	5	9.1	7.6	10	**ATV61WU40N4**	16.000
5.5	7.5	11.4	9.2	7.5	22	12	11	13.2	**ATV61WU55N4**	16.000
7.5	10	15.8	13.3	10.4	22	16	14	17.6	**ATV61WU75N4**	22.000
11	15	21.9	17.8	14.4	22	22.5	21	24.7	**ATV61WD11N4**	22.000
15	20	30.5	25.8	20	22	30.5	27	33.5	**ATV61WD15N4**	28.000
18.5	25	37.5	32.3	24.7	22	37	34	40.7	**ATV61WD18N4**	36.000
22	30	43.6	36.6	28.7	22	43.5	40	47.8	**ATV61WD22N4**	36.000
30	40	56.7	46.2	37.3	22	58.5	52	64.3	**ATV61WD30N4**	51.000
37	50	69.5	56.8	45.7	22	71.5	65	78.6	**ATV61WD37N4**	64.000
45	60	85.1	69.6	56	22	85	77	93.5	**ATV61WD45N4**	65.000
55	75	104.8	87	69	35	103	96	113.3	**ATV61WD55N4**	92.000
75	100	140.3	113.8	92.3	35	137	124	150.7	**ATV61WD75N4**	92.000
90	125	171.8	140.9	113	35	163	156	179.3	**ATV61WD90N4**	92.000
IP 54 drives with integrated category C1 EMC filter										
Three-phase supply voltage: 380…480 V 50/60 Hz										
0.75	1	1.8	1.5	1.2	5	2.3	2.1	2.5	**ATV61W075N4C**	19.000
1.5	2	3.5	3	2.3	5	4.1	3.4	4.5	**ATV61WU15N4C**	19.000
2.2	3	5	4.1	3.3	5	5.1	4.8	5.6	**ATV61WU22N4C**	20.000
3	–	6.7	5.6	4.4	5	7.2	6.2	7.9	**ATV61WU30N4C**	20.000
4	5	8.8	7.4	5.8	5	9.1	7.6	10	**ATV61WU40N4C**	23.000
5.5	7.5	11.4	9.2	7.5	22	12	11	13.2	**ATV61WU55N4C**	23.000
7.5	10	15.8	13.3	10.4	22	16	14	17.6	**ATV61WU75N4C**	32.000
11	15	21.9	17.8	14.4	22	22.5	21	24.7	**ATV61WD11N4C**	32.000
15	20	30.5	25.8	20	22	30.5	27	33.5	**ATV61WD15N4C**	40.000
18.5	25	37.5	32.3	24.7	22	37	34	40.7	**ATV61WD18N4C**	51.000
22	30	43.6	36.6	28.7	22	43.5	40	47.8	**ATV61WD22N4C**	50.000
30	40	56.7	46.2	37.3	22	58.5	52	64.3	**ATV61WD30N4C**	68.000
37	50	69.5	56.8	45.7	22	71.5	65	78.6	**ATV61WD37N4C**	85.000
45	60	85.1	69.6	56	22	85	77	93.5	**ATV61WD45N4C**	85.000
55	75	104.8	87	69	35	103	96	113.3	**ATV61WD55N4C**	119.000
75	100	140.3	113.8	92.3	35	137	124	150.7	**ATV61WD75N4C**	119.000
90	125	171.8	140.9	113	35	163	156	179.3	**ATV61WD90N4C**	119.000

Dimensions (overall)	
Drives	**W x H x D mm**
ATV61W075N4 (C)…WU30N4 (C)	240 x 490 x 272
ATV61WU40N4 (C), WU55N4 (C)	240 x 490 x 286
ATV61WU75N4 (C), WD11N4 (C)	260 x 525 x 286
ATV61WD15N4 (C)	295 x 560 x 315
ATV61WD18N4 (C), WD22N4 (C)	315 x 665 x 315
ATV61WD30N4 (C)	285 x 720 x 315
ATV61WD37N4 (C), WD45N4 (C)	285 x 880 x 343
ATV61WD55N4 (C)…WD90N4 (C)	362 x 1000 x 364

(1) These values are given for a nominal switching frequency of 8 kHz up to ATV61WD15N4 or ATV61WD15N4C, or 4 kHz for ATV61WD18N4…WD90N4 or ATV61WD18N4C…WD90N4C drives for use in continuous operation.
The switching frequency is adjustable from 2…16 kHz for all ratings.
Above 4 or 8 kHz, depending on the rating, the drive will reduce the switching frequency automatically in the event of an excessive temperature rise. For continuous operation above the nominal switching frequency, derate the nominal drive current (see derating curves on our website www.schneider-electric.com).
(2) Typical value for the indicated motor power and for the maximum prospective line Isc.

Note: *Consult the summary tables of possible drive, option and accessory combinations (see pages 1/38, 1/39, 1/44 and 1/45).*

Variable speed drives

Altivar 61

Supply voltage 380...480 V 50/60 Hz

PH09313

ATV61E5D11N4

IP 54 drives with integrated Vario switch disconnector and category C2 EMC filter

Three-phase supply voltage: 380…480 V 50/60 Hz

Motor		Line supply				Altivar 61				
Power indicated on rating plate (1)		Line current (2)		Apparent power	Max. prospective line Isc	Maximum continuous current In (1)		Max. transient current for 60 s	Reference	Weight
		380 V	480 V	380 V		380 V	460 V			
kW	HP	A	A	kVA	kA	A	A	A		kg
0.75	1	1.8	1.5	1.2	5	2.3	2.1	2.5	**ATV61E5075N4**	16.400
1.5	2	3.5	3	2.3	5	4.1	3.4	4.5	**ATV61E5U15N4**	16.400
2.2	3	5	4.1	3.3	5	5.1	4.8	5.6	**ATV61E5U22N4**	16.400
3	–	6.7	5.6	4.4	5	7.2	6.2	7.9	**ATV61E5U30N4**	16.400
4	5	8.8	7.4	5.8	5	9.1	7.6	10	**ATV61E5U40N4**	18.400
5.5	7.5	11.4	9.2	7.5	22	12	11	13.2	**ATV61E5U55N4**	18.400
7.5	10	15.8	13.3	10.4	22	16	14	17.6	**ATV61E5U75N4**	22.700
11	15	21.9	17.8	14.4	22	22.5	21	24.7	**ATV61E5D11N4**	22.700
15	20	30.5	25.8	20	22	30.5	27	33.5	**ATV61E5D15N4**	36.700
18.5	25	37.5	32.3	24.7	22	37	34	40.7	**ATV61E5D18N4**	45.400
22	30	43.6	36.6	28.7	22	43.5	40	47.8	**ATV61E5D22N4**	45.400
30	40	56.7	46.2	37.3	22	58.5	52	64.3	**ATV61E5D30N4**	52.800
37	50	69.5	56.8	45.7	22	71.5	65	78.6	**ATV61E5D37N4**	65.800
45	60	85.1	69.6	56	22	85	77	93.5	**ATV61E5D45N4**	65.800
55	75	104.8	87	69	35	103	96	113.3	**ATV61E5D55N4**	84.400
75	100	140.3	113.8	92.3	35	137	124	150.7	**ATV61E5D75N4**	84.400
90	125	171.8	140.9	113	35	163	156	179.3	**ATV61E5D90N4**	84.400

Dimensions (overall)

Drives	W x H x D
ATV61E5075N4…U30N4	240 x 490 x 296
ATV61E5U40N4, U55N4	240 x 490 x 310
ATV61E5U75N4, D11N4	260 x 525 x 310
ATV61E5D15N4	295 x 560 x 339
ATV61E5D18N4, D22N4	315 x 665 x 340
ATV61E5D30N4	285 x 720 x 335
ATV61E5D37N4, D45N4	285 x 880 x 383
ATV61E5D55N4…D90N4	362 x 1000 x 404

(1) These values are given for a nominal switching frequency of 8 kHz up to ATV61E5D15N4 or 4 kHz for ATV61E5D18N4...E5D90N4 drives for use in continuous operation.
The switching frequency is adjustable from 2…16 kHz for all ratings.
Above 4 or 8 kHz, depending on the rating, the drive will reduce the switching frequency automatically in the event of an excessive temperature rise. For continuous operation above the nominal switching frequency, derate the nominal drive current (see derating curves on our website www.schneider-electric.com).
(2) Typical value for the indicated motor power and for the maximum prospective line Isc.

Variants: page 1/23
Accessories: page 1/25
Dialogue: page 1/31
Drive/option combinations: page 1/34

Schneider Electric

Variable speed drives

Altivar 61

Supply voltage 500...690 V 50/60 Hz

PF107581

ATV61HU30S6X

IP 20 drives

Motor		Line supply			Altivar 61			
Power indicated on rating plate (1)		Line current (2)		Max. prospective line Isc	Maximum continuous current (1) (3)		Reference	Weight
500 V	575 V	500 V	600 V		500 V	575 V		
kW	HP	A	A	kA	A	A		kg
Three-phase supply voltage: 500…600 V 50/60 Hz								
2.2	3	7.6	6.7	22	4.5	3.9	**ATV61HU22S6X**	7.500
3	–	9.9	10	22	5.8	–	**ATV61HU30S6X**	7.500
4	5	12.5	10.9	22	7.5	6.1	**ATV61HU40S6X**	7.500
5.5	7.5	16.4	14.2	22	10	9	**ATV61HU55S6X**	7.500
7.5	10	21.4	18.4	22	13.5	11	**ATV61HU75S6X**	7.500

IP 20 drives with integrated category C3 EMC filter

Three-phase supply voltage: 500…690 V 50/60 Hz

PF107583

ATV61HD45Y

Motor			Line supply				Altivar 61				
Power indicated on rating plate (1)			Line current (2)			Max. prospective line Isc	Maximum continuous current (1) (3)			Reference (4)	Weight
500 V	575 V	690 V	500 V	600 V	690 V		500 V	575 V	690 V		
kW	HP	kW	A	A	A	kA	A	A	A		kg
2.2	3	3	5.2	4.4	5.2	22	4.5	3.9	4.5	**ATV61HU30Y**	30.000
3	–	4	6.8	–	6.6	22	5.8	–	5.5	**ATV61HU40Y**	30.000
4	5	5.5	8.6	7.2	8.6	22	7.5	6.1	7.5	**ATV61HU55Y**	30.000
5.5	7.5	7.5	11.2	9.5	11.2	22	10	9	10	**ATV61HU75Y**	30.000
7.5	10	11	14.6	12.3	15.5	22	13.5	11	13.5	**ATV61HD11Y**	30.000
11	15	15	19.8	16.7	20.2	22	18.5	17	18.5	**ATV61HD15Y**	30.000
15	20	18.5	24.6	20.7	24	22	24	22	24	**ATV61HD18Y**	30.000
18.5	25	22	29	24	27	22	29	27	27	**ATV61HD22Y**	30.000
22	30	30	33	28	34	22	35	32	35	**ATV61HD30Y**	30.000
30	40	37	48	41	47	22	47	41	43	**ATV61HD37Y**	68.000
37	50	45	62	51	55	22	59	52	54	**ATV61HD45Y**	68.000
45	60	55	68	57	63	22	68	62	62	**ATV61HD55Y**	68.000
55	75	75	79	67.0	82	22	85	77	84	**ATV61HD75Y**	68.000
75	100	90	109	92	101	22	110	99	104	**ATV61HD90Y**	68.000
90	125	110	128	113	117	22	136	125	125	**ATV61HC11Y** (4)	102.000
110	150	132	153	133	137	28	165	144	150	**ATV61HC13Y** (4)	102.000
132	–	160	182	158.9	163	28	200	–	180	**ATV61HC16Y** (4)	102.000
160	200	200	218	197	199	35	240	192	220	**ATV61HC20Y** (4)	102.000
200	250	250	277	250	257	35	312	242	290	**ATV61HC25Y** (4)	181.000
250	350	315	342	311	317	35	390	336	355	**ATV61HC31Y** (4)	181.000
315	450	400	426	390	394	35	462	412	420	**ATV61HC40Y** (4)	181.000
400	550	500	547	494	505	35	590	528	543	**ATV61HC50Y** (4)	383.000
500	700	630	673	613	616	42	740	672	675	**ATV61HC63Y** (4)	383.000
630	800	800	847	771	775	42	900	768	840	**ATV61HC80Y** (4)	383.000

PF107586

PF107532

ATV61HC31Y
+
VW3A4572 (line choke mandatory) (4)

Dimensions (overall)

Drives	W x H x D mm
ATV61HU22S6X…HU75S6X	210 x 295 x 213
ATV61HU30Y…HD30Y	240 x 420 x 236
ATV61HD37Y…HD90Y	320 x 630 x 290
ATV61HC11Y…HC20Y	340 x 1190 x 377
ATV61HC25Y…HC40Y	595 x 1190 x 377
ATV61HC50Y…HC80Y	1120 x 1390 x 377

(1) These values are given for a nominal switching frequency of 4 kHz for ATV61HU●●S6X and for ATV61HU30Y… HD30Y or 2.5 kHz for ATV61HD37Y…HC80Y drives for use in continuous operation. The switching frequency is adjustable from 2.5…6 kHz for ATV61HU●●S6X and for ATV61HU30Y… HD30Y and from 2.5…4.9 kHz for ATV61HD37Y…HC80Y drives. Above 2.5 kHz or 4 kHz, depending on the rating, the drive will reduce the switching frequency automatically in the event of an excessive temperature rise. For continuous operation above the nominal switching frequency, derate the nominal drive current (see derating curves on our website www.schneider-electric.com).

(2) Typical value for the indicated motor power and for the maximum prospective line Isc.

(3) The maximum transient current for 60 seconds is equal to 120% of the maximum continuous current.

(4) Line choke mandatory for ATV61HC11Y…HC80Y drives, unless a special transformer is used (12-pulse) or when using the "387" variant for medium voltage motors (see page 1/24). The line choke must be ordered separately (see page 1/68).

***Note:** Consult the summary tables of possible drive, option and accessory combinations (see pages 1/40 to 1/45).*

Variable speed drives

Altivar 61

Supply voltage 500...690 V 50/60 Hz

PF110500

ATV61QC13Y

Water-cooled IP 20 drives

Three-phase supply voltage: 500…690 V 50/60 Hz

Motor			Line supply				Altivar 61				
Power indicated on rating plate *(1)*			Line current *(2)*			Max. prospective line Isc	Maximum continuous current *(1) (3)*			Reference *(4)*	Weight
500 V	575 V	690 V	500 V	600 V	690 V		500 V	575 V	690 V		
kW	*HP*	kW	A	A	A	kA	A	A	A		kg
110	*150*	132	153	133	137	28	165	144	150	**ATV61QC13Y**	80.000
132	–	160	182	158.9	163	28	200	–	180	**ATV61QC16Y**	80.000
160	*200*	200	218	197	199	35	240	192	220	**ATV61QC20Y**	80.000
200	*250*	250	277	250	257	35	312	242	290	**ATV61QC25Y**	140.000
250	*350*	315	342	311	317	35	390	336	355	**ATV61QC31Y**	140.000
315	*450*	400	426	390	394	35	462	412	420	**ATV61QC40Y**	140.000
400	*550*	500	547	494	505	35	590	528	543	**ATV61QC50Y**	300.000
500	*700*	630	673	613	616	42	740	672	675	**ATV61QC63Y**	300.000
630	*800*	800	847	771	775	42	900	768	840	**ATV61QC80Y**	300.000

Dimensions (overall)

Drives	W x H x D mm
ATV61QC13Y…QC20Y	330 x 950 x 377
ATV61QC25Y…QC40Y	585 x 950 x 377
ATV61QC50Y…QC80Y	1110 x 1150 x 377

(1) These values are given for a nominal switching frequency of 2.5 kHz, for use in continuous operation.
The switching frequency is adjustable from 2.5…4.9 kHz.
Above 2.5 kHz, depending on the rating, the drive will reduce the switching frequency automatically in the event of an excessive temperature rise. For continuous operation above the nominal switching frequency, derate the nominal drive current (see derating curves on our website www.schneider-electric.com).

(2) Typical value for the indicated motor power and for the maximum prospective line Isc.

(3) The maximum transient current for 60 seconds is equal to 120% of the maximum continuous current.

(4) A line choke must be used (see page 1/68).

***Note:** Consult the summary tables of possible drive, option and accessory combinations (see pages 1/42 to 1/45).*

Variable speed drive with additional power supply

When the power consumption of the option cards exceeds 200 mA, ATV61W●●●N4 drives can be supplied with an additional 24 V ⎓ power supply, which allows additional consumption of 250 mA.

In this case, add **A24** at the end of the reference. For example, ATV61W075N4 becomes **ATV61W075N4A24**.

Variable speed drive in a reinforced version

This variant enables variable speed drives to operate in difficult ambient pollution conditions and complies with standard IEC60721-3-3 class 3C2.

ATV61HD55M3X…HD90M3X, ATV61HD90N4…HC63N4, ATV61H●●●Y and ATV61W●●●N4A24 drives are supplied as standard in a reinforced version.

To order ATV61H075M3…HU75M3 and ATV61H075N4…HD75N4 variable speed drives in a reinforced version, add **S337** at the end of the reference.
For example, ATV61H075M3 becomes **ATV61H075M3S337**.

To order ATV61HD11M3X…HD45M3X drives in this version, add **337** at the end of the reference.
For example, ATV61HD11M3X becomes **ATV61HD11M3X337**.

In the reinforced version, the variable speed drive is always supplied with a remote graphic display terminal.

Variable speed drive with integrated terminal

All drives come with a remote graphic display terminal and an integrated terminal as standard.

ATV61H075M3…HD45M3X and ATV61H075N4…HD75N4 drives can be ordered without a remote graphic display terminal. They will then have the integrated terminal only.
In this case, add **Z** at the end of the reference.
For example, ATV61H075M3 becomes **ATV61H075M3Z**.

Variable speed drive without DC choke

ATV61HD90N4…HC63N4 drives are supplied with a DC choke as standard.

They can be ordered without a DC choke for connections to the DC bus or when using a line choke (see page 1/67), by adding **D** at the end of the reference.
For example, ATV61HD90N4 becomes **ATV61HD90N4D**.

Variable speed drive with EMC plate conforming to NEMA type 12 standard

ATV61W●●●N4 drives are supplied as standard with a European version EMC plate.

To order drives with an EMC plate conforming to NEMA type 12 standard, add **U** at the end of the reference. This plate is supplied without a drill hole.
For example, ATV61W075N4 becomes **ATV61W075N4U**.

***Note**:*
- *ATV61H075M3…HD45M3X, ATV61H075N4…HD75N4, ATV61H●●●S6X, ATV61W●●●N4C and ATV61HU30Y…HD90Y drives are supplied as standard with a European version plate for EMC mounting.*
- *ATV61HD55M3X…HD90M3X, ATV61HD90N4…HC63N4 and ATV61HC11Y…HC80Y drives are supplied as standard without a plate for EMC mounting. Depending on the reference, the European version EMC plate is included in the UL Type 1 or IP 31 kit (see pages 1/26 and 1/27).*

1

Low voltage drive for medium voltage motors

This variant is an optimized solution for a medium voltage installation since it allows a low voltage drive to be used to control a medium voltage motor, thus offering a significant reduction in costs.

Debugging and maintenance are also simpler and therefore less expensive.

This variant is particularly suitable for pump and fan installations requiring low starting torque and/or long cable runs, such as submersible pumps, etc.

The drive is supplied by a medium voltage/low voltage step-down transformer and controls the motor via a sinus filter and a low voltage/medium voltage step-up transformer.

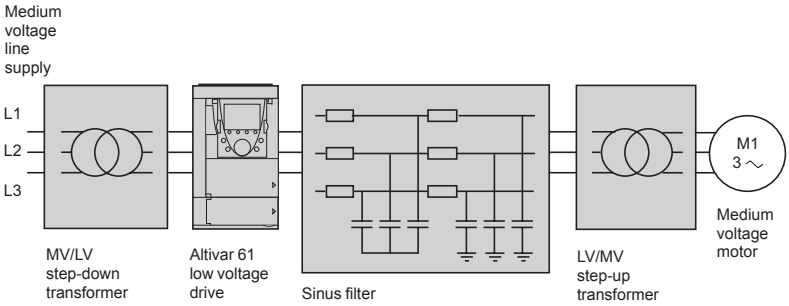

This variant allows use of a low voltage drive covering motor ratings from 110 kW/*150 HP* to 800 kW/*800 HP* for a medium voltage line supply between 700 V and 6600 V.

To order ATV61HC11N4D…HC63N4D and ATV61HC11Y…HC80Y drives in this variant, add **387** at the end of the reference.
For example, ATV61HC11N4D becomes **ATV61HC11N4D387**.

The sinus filter must be ordered separately (see page 1/87).

To determine the size of the drive and the step-up/step-down transformers, please contact our Customer Care Centre.

537178

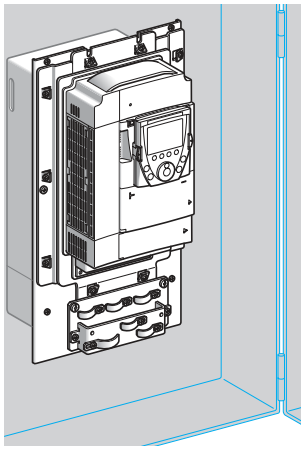

ATV61HU75N4 flush-mounted

537179

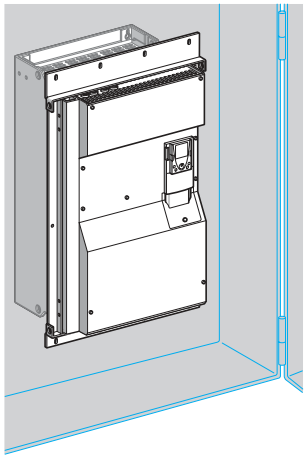

ATV61HC31N4D flush-mounted

Kit for flush-mounting in a dust and damp proof enclosure
(for ATV61H●●●●● drives)

This kit is used to mount the power section of the drive outside the enclosure. This solution considerably reduces dissipated losses in the enclosure *(1)*.

It is available for ATV61H●●●M3, ATV61H●●●M3X, ATV61H075N4…HC31N4, ATV61H●●●S6X, ATV61HD90N4D…HC31N4D and ATV61HU30Y…HC40Y drives.

With this type of mounting, the maximum internal temperature in the enclosure can then reach 60°C without it being necessary to derate the drive current.
Between 50°C and 60°C, a control card fan kit must be used for ATV61HD22N4…HD75N4 and ATV61HU30Y…HD90Y drives to prevent hot spots (see page 1/28).

The back of the enclosure must be drilled and cut out for this type of mounting.

The kit includes:
- A metal frame of the right size for the drive rating
- Corner pieces
- Seals
- A fan support. This is used to re-position the fans so that they can be accessed from the front of the enclosure
- Mounting hardware
- A manual

References

For drives		Reference	Weight kg
ATV61H075M3, HU15M3 ATV61H075N4…HU22N4		**VW3A9501**	2.700
ATV61HU22M3…HU40M3 ATV61HU30N4, HU40N4		**VW3A9502**	3.100
ATV61HU55M3 ATV61HU55N4, HU75N4		**VW3A9503**	3.700
ATV61HU75M3 ATV61HD11N4 ATV61HU22S6X…HU75S6X		**VW3A9504**	4.600
ATV61HD11M3X, HD15M3X ATV61HD15N4, HD18N4		**VW3A9505**	4.900
ATV61HD18M3X, HD22M3X ATV61HD22N4 ATV61HU30Y…HD30Y		**VW3A9506**	3.900
ATV61HD30N4, HD37N4		**VW3A9507**	4.200
ATV61HD30M3X…HD45M3X		**VW3A9508**	4.900
ATV61HD45N4…HD75N4 ATV61HD37Y…HD90Y		**VW3A9509**	5.200
ATV61HD55M3X, HD75M3X ATV61HD90N4, HC11N4 *(2)* ATV61HD90N4D, HC11N4D		**VW3A9510**	5.100
ATV61HD90M3X ATV61HC13N4 *(2)* ATV61HC13N4D		**VW3A9511**	3.600
ATV61HC16N4 *(2)* ATV61HC16N4D ATV61HC11Y…HC20Y *(3)*		**VW3A9512**	4.300
ATV61HC22N4 *(2)* ATV61HC22N4D		**VW3A9513**	4.700
ATV61HC25N4, HC31N4 *(2)* ATV61HC25N4D, HC31N4D ATV61HC25Y…HC40Y *(3)*	Without braking unit	**VW3A9514**	4.700
	With braking unit	**VW3A9515**	4.700

(1) Power dissipated in the enclosure for dust and damp proof flush-mounting: please consult our website www.schneider-electric.com.
(2) Drives supplied as standard with a DC choke: when mounting, cut out and drill the enclosure for the choke.
(3) Drives supplied as standard with a transformer for the fan: when mounting, cut out and drill the enclosure for the transformer.

1

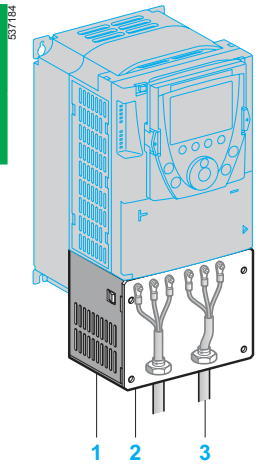

UL Type 1 conformity kit (for mounting outside the enclosure)

When the drive is mounted directly on a wall outside the enclosure, this kit can be used to ensure UL Type 1 conformity when connecting the cables with a tube.
The shielding is connected inside the kit.

For ATV61H●●●M3, ATV61HD11M3X…HD45M3X, ATV61H075N4…HD75N4, ATV61H●●●S6X and ATV61HU30Y…HD90Y drives, the kit includes:
- All the mechanical fittings 1 including a pre-cut plate 2 for connecting the tubes 3
- Mounting hardware
- A manual

For ATV61HD55M3X…HD90M3X, ATV61HD90N4…HC31N4, ATV61HD90N4D…HC31N4D and ATV61HC11Y…HC40Y drives, the kit includes:
- An IP 54 casing 4 used to maintain the IP 54 degree of protection for the power section
- An EMC plate 5
- A UL Type 1 cover 7
- A pre-drilled plate 6 for connecting the tubes 3
- Mounting hardware
- A manual

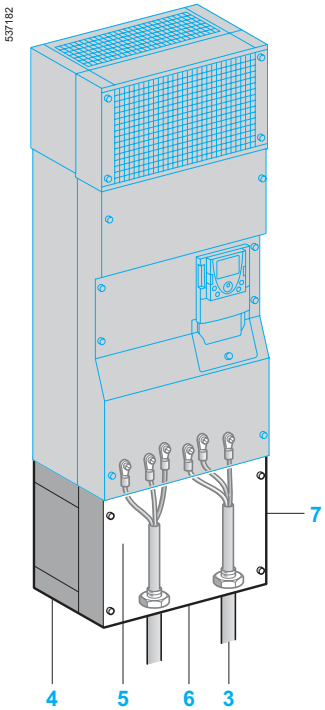

UL Type 1 conformity kits

References

For drives		Reference	Weight kg
ATV61H075M3, HU15M3 ATV61H075N4…HU22N4		**VW3A9201**	1.300
ATV61HU22M3…HU40M3 ATV61HU30N4, HU40N4		**VW3A9202**	1.500
ATV61HU55M3 ATV61HU55N4, HU75N4		**VW3A9203**	1.800
ATV61HU75M3 ATV61HD11N4 ATV61HU22S6X…U75S6X		**VW3A9204**	2.000
ATV61HD11M3X, HD15M3X ATV61HD15N4, HD18N4		**VW3A9205**	2.800
ATV61HD18M3X, HD22M3X ATV61HD22N4 ATV61HU30Y…HD30Y		**VW3A9206**	4.000
ATV61HD30N4, HD37N4		**VW3A9207**	5.000
ATV61HD30M3X…HD45M3X		**VW3A9217**	7.000
ATV61HD45N4…HD75N4 ATV61HD37Y…HD90Y		**VW3A9208**	7.000
ATV61HD55M3X, HD75M3X ATV61HD90N4, HC11N4 *(1)* ATV61HD90N4D, HC11N4D *(2)*		**VW3A9209**	9.400
ATV61HD90M3X ATV61HC13N4 *(1)* ATV61HC13N4D *(2)*		**VW3A9210**	11.800
ATV61HC16N4 *(1)* ATV61HC16N4D *(2)* ATV61HC11Y…HC20Y *(3)*		**VW3A9211**	11.600
ATV61HC22N4 *(1)* ATV61HC22N4D *(2)*		**VW3A9212**	14.600
ATV61HC25N4, HC31N4 *(1)* ATV61HC25N4, HC31N4D *(2)* ATV61HC25Y…HC40Y *(3)*	Without braking unit	**VW3A9213**	19.500
	With braking unit	**VW3A9214**	19.500

(1) Drives supplied as standard with a DC choke.
(2) Drives supplied as standard without DC choke.
(3) Drives supplied as standard with a transformer for the fan.

Variable speed drives: page 1/16
Variants: page 1/23
Dialogue: page 1/31
Drive/option combinations: page 1/34

Variable speed drives
Altivar 61
Accessories

537180

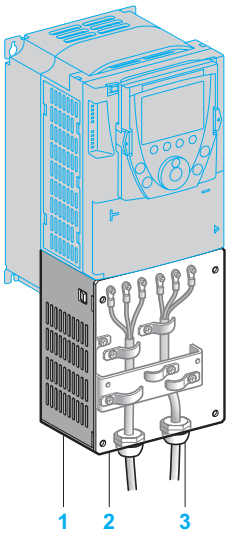

IP 21 conformity kit

IP 21 or IP 31 conformity kit (for mounting outside the enclosure)

When the drive is mounted directly on a wall outside the enclosure, this kit can be used to ensure IP 21 or IP 31 degree of protection when connecting the cables with a cable gland.
The shielding is connected inside the kit.

For ATV61H●●●M3, ATV61HD11M3X…HD45M3X, ATV61H075N4…HD75N4, ATV61H●●●S6X and ATV61HU30Y…HD90Y drives, the kit conforms to IP 21 degree of protection and includes:
- All the mechanical parts 1 including a drilled plate 2 for attaching the cable glands 3
- Mounting hardware
- A manual

For ATV61HD55M3X…HD90M3X, ATV61HD90N4…HC63N4, ATV61HD90N4D…HC63N4D and ATV61HC11Y…HC80Y drives, the kit conforms to IP 31 degree of protection.
and includes:
- An IP 54 casing 4 used to maintain the IP 54 degree of protection for the power section
- An EMC plate with cable clips 5
- An IP 31 cover 6
- Mounting hardware
- A manual

537181

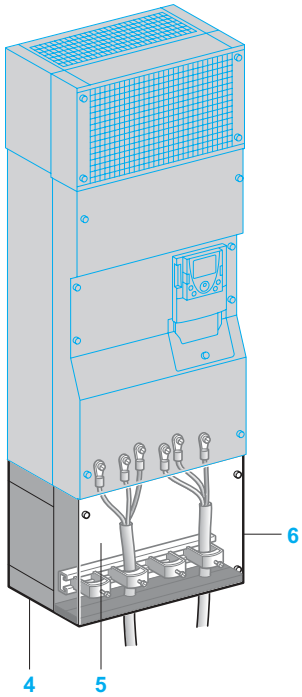

IP 31 conformity kit

References

For drives		Degree of protection	Reference	Weight kg
ATV61H075M3, HU15M3 ATV61H075N4…HU22N4		IP 21	**VW3A9101**	1.300
ATV61HU22M3…HU40M3 ATV61HU30N4, HU40N4		IP 21	**VW3A9102**	1.500
ATV61HU55M3 ATV61HU55N4, HU75N4		IP 21	**VW3A9103**	1.800
ATV61HU75M3 ATV61HD11N4 ATV61HU22S6X…ATV61HU75S6X		IP 21	**VW3A9104**	2.000
ATV61HD11M3X, HD15M3X ATV61HD15N4, HD18N4		IP 21	**VW3A9105**	2.800
ATV61HD18M3X, HD22M3X ATV61HD22N4 ATV61HU30Y…HD30Y		IP 21	**VW3A9106**	4.000
ATV61HD30N4, HD37N4		IP 21	**VW3A9107**	5.000
ATV61HD30M3X…HD45M3X		IP 21	**VW3A9117**	7.000
ATV61HD45N4…HD75N4 ATV61HD37Y…HD90Y		IP 21	**VW3A9108**	7.000
ATV61HD55M3X, HD75M3X ATV61HD90N4, HC11N4 *(1)* ATV61HD90N4D, HC11N4D *(2)*		IP 31	**VW3A9109**	9.400
ATV61HD90M3X ATV61HC13N4 *(1)* ATV61HC13N4D *(2)*		IP 31	**VW3A9110**	11.800
ATV61HC16N4 *(1)* ATV61HC16N4D *(2)* ATV61HC11Y…HC20Y *(3)*		IP 31	**VW3A9111**	11.600
ATV61HC22N4 *(1)* ATV61HC22N4D *(2)*		IP 31	**VW3A9112**	14.600
ATV61HC25N4, HC31N4 *(1)* ATV61HC25N4, HC31N4D *(2)* ATV61HC25Y…HC40Y *(3)*	Without braking unit	IP 31	**VW3A9113**	19.500
	With braking unit	IP 31	**VW3A9114**	19.500
ATV61HC40N4, HC50N4 *(1)* ATV61HC40N4D, HC50N4D *(2)*		IP 31	**VW3A9115**	25.000
ATV61HC63N4 *(1)* ATV61HC63N4D *(2)* ATV61HC50Y…HC80Y *(3)*		IP 31	**VW3A9116**	35.000

(1) Drives supplied as standard with a DC choke.
(2) Drives supplied as standard without DC choke.
(3) Drives supplied as standard with a transformer for the fan.

Variable speed drives: page 1/16
Variants: page 1/23
Dialogue: page 1/31
Drive/option combinations: page 1/34

1

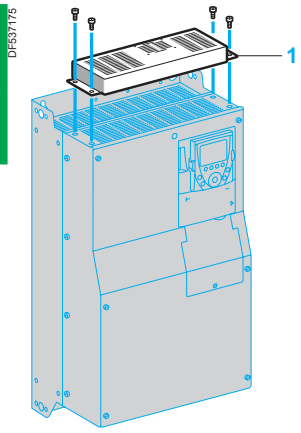

Control card fan kit

Control card fan kit

This kit is required for ATV61HD18M3X…HD45M3X, ATV61HD22N4…HD75N4 and ATV61HU30Y…HD90Y drives.
It enables the drive to operate at an ambient temperature of 50°C to 60°C, for example if it is mounted in an IP 54 enclosure. The circulation of air around the electronic cards prevents the formation of hot spots.

To ascertain the derating to be applied to the drive nominal current, consult the curves on our website www.schneider-electric.com.

The kit 1 is mounted on the upper part of the drive. It is powered by the drive.
It comprises:
- A fan subassembly
- Mounting hardware
- A manual

References

For drives	Reference	Weight kg
ATV61HD18M3X, HD22M3X ATV61HD22N4 ATV61HU30Y…HD30Y	**VW3A9404**	0.700
ATV61HD30N4, HD37N4	**VW3A9405**	0.700
ATV61HD30M3X…HD45M3X	**VW3A9406**	0.800
ATV61HD45N4…HD75N4 ATV61HD37Y…HD90Y	**VW3A9407**	0.900

Adaptor for 115 V ∿ logic inputs

This adaptor is used to connect 115 V ∿ logic signals to the logic inputs on the drive or an I/O expansion card.

7 logic inputs with capacitive impedance at 60 Hz of 0.22 µF are available for connecting the logic signals:
- Maximum current: 200 mA
- Response time: 5 ms to change from state 0 to state 1, 20 ms to change from state 1 to state 0
- Logic state 0 for a voltage below 20 V, logic state 1 for a voltage between 70 V and 132 V

The power supply must be provided by a 115 V ∿ external supply (min. 70 V, max. 132 V).

Reference

Description	Reference	Weight kg
Adaptor for 115 V ∿ logic inputs	**VW3A3101**	–

Ready-assembled IP 54 base plate (for ATV61W●●●N4 and ATV61W●●●N4C drives)

DF537183

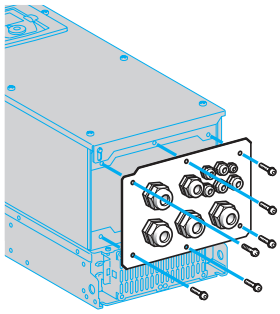

Ready-assembled IP 54 base plat

This plate can be used to increase the number of cable connections supported by the drive as standard from 3 to 11.

It is supplied with:
- A metal cable gland for the motor cable
- A special plastic cable gland for the network cable
- Plastic cable glands for connection of the control cable or options such as communication cards, etc.

References

For drive	Type of cable gland			Reference	Weight kg
	Metal	Plastic	Plastic for network cable		
ATV61W075N4 … WU55N4 ATV61W075N4C …WU55N4C	1 (ISO 25)	1 (ISO 12), 4 (ISO 16) 3 (ISO 20), 1 (ISO 25)	1 (ISO 32)	**VW3A9901**	1.300
ATV61WU75N4, WD11N4 ATV61WU75N4C, WD11N4C	1 (ISO 25)	1 (ISO 12), 4 (ISO 16) 3 (ISO 20), 1 (ISO 25)	1 (ISO 32)	**VW3A9902**	1.300
ATV61WD15N4 ATV61WD15N4C	1 (ISO 32)	1 (ISO 12), 4 (ISO 16) 1 (ISO 20), 3 (ISO 32)	1 (ISO 32)	**VW3A9903**	1.300
ATV61WD18N4, WD22N4 ATV61WD18N4C, WD22N4C	1 (ISO 32)	1 (ISO 12), 4 (ISO 16) 1 (ISO 20), 3 (ISO 32)	1 (ISO 32)	**VW3A9904**	1.300
ATV61WD30N4 ATV61WD30N4C	1 (ISO 40)	1 (ISO 12), 4 (ISO 16) 1 (ISO 20), 3 (ISO 40)	1 (ISO 32)	**VW3A9905**	1.300
ATV61WD37N4, WD45N4 ATV61WD37N4C, WD45N4C	1 (ISO 40)	1 (ISO 12), 4 (ISO 16) 1 (ISO 20), 3 (ISO 50)	1 (ISO 32)	**VW3A9906**	1.300
ATV61WD55N4, WD75N4	1 (ISO 50)	1 (ISO 12), 4 (ISO 16) 1 (ISO 20), 1 (ISO 50) 1 (ISO 63)	1 (ISO 32)	**VW3A9907**	1.500
ATV61WD90N4	1 (ISO 50)	1 (ISO 12), 4 (ISO 16) 1 (ISO 20), 2 (ISO 63)	1 (ISO 32)	**VW3A9908**	1.500
ATV61WD55N4C, WD75N4C	1 (ISO 50)	1 (ISO 12), 4 (ISO 16) 1 (ISO 20), 1 (ISO 50) 2 (ISO 63)	1 (ISO 32)	**VW3A9909**	1.500
ATV61WD90N4C	1 (ISO 50)	1 (ISO 12), 4 (ISO 16) 1 (ISO 20), 3 (ISO 63)	1 (ISO 32)	**VW3A9910**	1.500

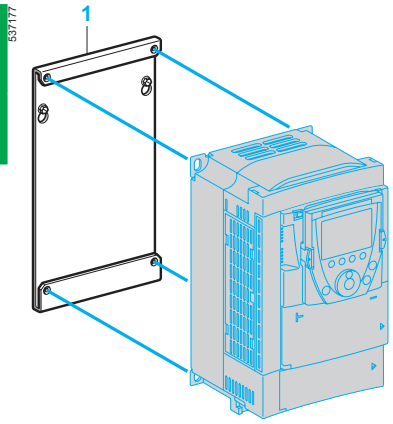

VW3A9304

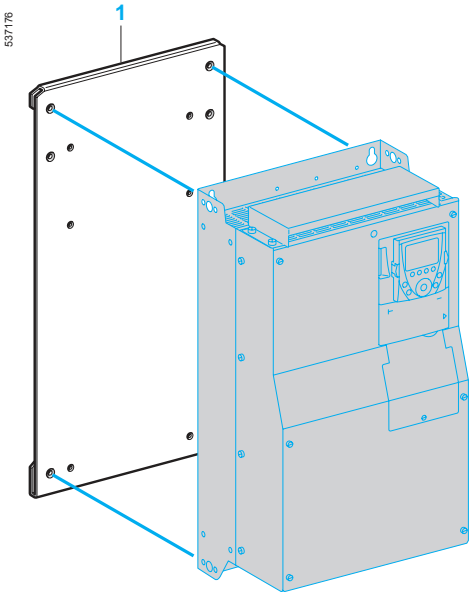

VW3A9312

Substitution kit for Altivar 38 drives

This kit 1 is used to install an Altivar 61 drive in place of an Altivar 38 drive using the same fixing holes. It includes the mechanical adaptors required for mounting.

References

Old drive	Motor Power kW	Motor Power *HP*	Replaced by	Reference	Weight kg
Replacing an Altivar 38 drive with an integrated EMC filter Three-phase supply voltage: 380…480 V 50/60 Hz					
ATV38HU18N4	0.75	*1*	ATV61H075N4	**VW3A9302**	–
ATV38HU29N4	1.5	*2*	ATV61HU15N4	**VW3A9302**	–
ATV38HU41N4	2.2	*3*	ATV61HU22N4	**VW3A9302**	–
ATV38HU54N4	3	–	ATV61HU30N4	**VW3A9304**	–
ATV38HU72N4	4	*5*	ATV61HU40N4	**VW3A9304**	–
ATV38HU90N4	5.5	*7.5*	ATV61HU55N4	**VW3A9305**	–
ATV38HD12N4	7.5	*10*	ATV61HU75N4	**VW3A9306**	–
ATV38HD16N4	11	*15*	ATV61HD11N4	**VW3A9307**	–
ATV38HD23N4	15	*20*	ATV61HD15N4	**VW3A9308**	–
ATV38HD25N4	18.5	*25*	ATV61HD18N4	**VW3A9309**	–
ATV38HD28N4	22	*30*	ATV61HD22N4	**VW3A9310**	–
ATV38HD33N4	30	*40*	ATV61HD30N4	**VW3A9310**	–
ATV38HD46N4	37	*50*	ATV61HD37N4	**VW3A9312**	–
ATV38HD54N4	45	*60*	ATV61HD45N4	**VW3A9312**	–
ATV38HD64N4	55	*75*	ATV61HD55N4	**VW3A9312**	–
ATV38HD79N4	75	*100*	ATV61HD75N4	**VW3A9312**	–
Replacing an Altivar 38 drive without integrated EMC filter Three-phase supply voltage: 380…480 V 50/60 Hz					
ATV38HD25N4X	18.5	*25*	ATV61HD18N4	**VW3A9309**	–
ATV38HD28N4X	22	*30*	ATV61HD22N4	**VW3A9310**	–
ATV38HD33N4X	30	*40*	ATV61HD30N4	**VW3A9310**	–
ATV38HD46N4X	37	*50*	ATV61HD37N4	**VW3A9312**	–
ATV38HD54N4X	45	*60*	ATV61HD45N4	**VW3A9312**	–
ATV38HD64N4X	55	*75*	ATV61HD55N4	**VW3A9312**	–
ATV38HD79N4X	75	*100*	ATV61HD75N4	**VW3A9312**	–

Substitution kit for Altivar 58 drives

This kit 1 is used to install an Altivar 61 drive in place of an Altivar 58 drive for variable torque applications, using the same fixing holes.
It includes the mechanical adaptors required for mounting.

References

Old drive	Motor Power kW	Motor Power *HP*	Replaced by	Reference	Weight kg
Three-phase supply voltage: 500 V 50/60 Hz					
ATV58HD28N4	22	*30*	ATV61HD30Y	**VW3A9310**	–
ATV58HD33N4	30	*40*	ATV61HD37Y	**VW3A9312**	–
ATV58HD46N4	37	*50*	ATV61HD45Y	**VW3A9312**	–
ATV58HD54N4	45	*60*	ATV61HD55Y	**VW3A9312**	–
ATV58HD64N4	55	*75*	ATV61HD75Y	**VW3A9312**	–
ATV58HD79N4	75	*100*	ATV61HD90Y	**VW3A9312**	–

Variable speed drives: page 1/16
Variants: page 1/23
Dialogue: page 1/31
Drive/option combinations: page 1/34

PF600255

Remote graphic display terminal

Remote graphic display terminal
(this display terminal can be supplied with the drive or ordered separately)

This display terminal is attached to the front of the drive. It includes the integrated graphic terminal for drives ordered without a graphic display terminal (see page 1/23).

It can be:
- Used remotely in conjunction with the appropriate accessories (see below)
- Connected to several drives using multidrop link components (see page 1/32)

It is used to:
- Control, adjust and configure the drive
- Display the current values (motor, input/output values, etc.)
- Save and download configurations; 4 configuration files can be saved.

The maximum operating temperature of the terminal is 60°C and it has IP 54 protection.

Description

1 Graphic display unit:
- 8 lines, 240 x 160 pixels
- large digits that can be read from 5 m away
- bar chart display

2 Assignable function keys F1, F2, F3, F4:
- dialogue functions: direct access, help screens, navigation
- application functions: Local/Remote, preset speed

3 STOP/RESET key: local control of motor stopping/fault clearing

4 RUN key: local control of motor operation

5 Navigation button:
- Press: saves the current value (ENT)
- Turn ±: increases or decreases the value, or goes to the next or previous line

6 FWD/REV key: reverses the motor direction of rotation

7 ESC key: aborts a value, a parameter, or a menu to return to the previous selection

***Note:** Keys 3, 4 and 6 can be used to control the drive directly.*

Reference

Description	Item no.	Reference	Weight kg
Remote graphic display terminal	1	**VW3A1101**	0.180

Remote mounting accessories for the graphic display terminal

Remote graphic display terminal accessories

The following accessories are available:
- A remote mounting kit 2 for mounting on an enclosure door with IP 54 degree of protection, and includes:
  - All the mechanical fittings
  - Mounting hardware
- A transparent door 3 which attaches to the remote mounting mechanism to achieve IP 65 degree of protection
- A preassembled cordset 4 with two RJ45 connectors for connecting the graphic display terminal to the Altivar 61 drive (1, 3, 5 or 10 metres long)
- A female/female RJ45 adaptor 5 for connecting the graphic display terminal VW3A1101 to the remote-mounting cordset VW3A1104R●●●

References

Description	Item no.	Length m	Degree of protection	Reference	Weight kg
Remote mounting kit Order with remote-mounting cordset VW3A1104R●●●	2	–	IP 54	**VW3A1102**	0.150
Door for remote mounting kit	3	–	IP 65	**VW3A1103**	0.040
Preassembled remote-mounting cordsets with 2 RJ45 connectors	4	1	–	**VW3A1104R10**	0.050
	4	3	–	**VW3A1104R30**	0.150
	4	5	–	**VW3A1104R50**	0.250
	4	10	–	**VW3A1104R100**	0.500
Female/female RJ45 adaptor	5	–	–	**VW3A1105**	0.010

Variable speed drives

Altivar 61

Option: dialogue

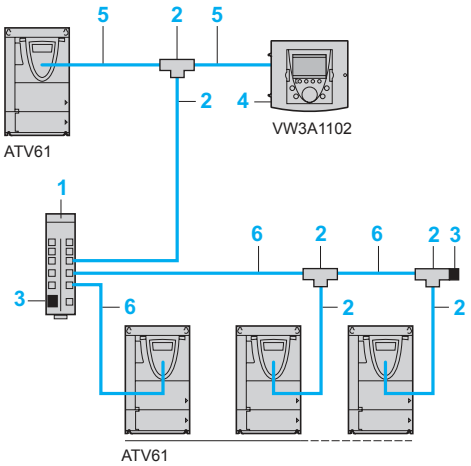

Example of connection via multidrop link

Multidrop connection accessories

These accessories enable a graphic display terminal to be connected to several drives via a multidrop link. This multidrop link is connected to the Modbus terminal port on the front of the drive.

Connection accessories

Description		Item no.	Order in multiples of	Unit reference	Weight kg
Modbus splitter box 10 RJ45 connectors and 1 screw terminal block		1	–	**LU9GC3**	0.500
Modbus T-junction boxes	With integrated cable (0.3 m)	2	–	**VW3A8306TF03**	–
	With integrated cable (1 m)	2	–	**VW3A8306TF10**	–
Modbus line terminator	For RJ45 connector R = 120 Ω, C = 1 nf	3	2	**VW3A8306RC**	0.010
Remote mounting kit	For graphic display terminal VW3A1101	4	–	**VW3A1102**	0.150

Cordsets (preassembled with 2 RJ45 connectors)

Used for	Item no.	Length m	Reference	Weight kg
Remote operation of the Altivar 61 and the graphic display terminal VW3A1101	5	1	**VW3A1104R10**	0.050
		3	**VW3A1104R30**	0.150
		5	**VW3A1104R50**	0.250
		10	**VW3A1104R100**	0.500
Modbus serial link	6	0.3	**VW3A8306R03**	0.025
		1	**VW3A8306R10**	0.060
		3	**VW3A8306R30**	0.130

Variable speed drives

Altivar 61

Option: configuration tools

Configuration with SoMove Mobile software for mobile phones via Bluetooth®

SoMove setup software with Modbus-Bluetooth® adaptor for PC

PF100231C

Configuration with the Multi-Loader tool connected to the Altivar 61 drive

SoMove Mobile software for mobile phones *(1)*

SoMove Mobile software converts any compatible mobile phone *(1)* into a remote graphic display terminal, offering an identical Human-Machine Interface.

Particularly suitable for on-site or remote maintenance operations, SoMove Mobile software can be used to print out and save configurations, import them from a PC and export them to a PC or a drive equipped with the Modbus-Bluetooth® adaptor (TCSW AAC13FB) via the Bluetooth® wireless link.

The SoMove Mobile software and drive configuration files can be downloaded from our website www.schneider-electric.com.

References

Description	For drives	Reference	Weight kg
SoMove Mobile software for mobile phones *(1)*	ATV61●●●●●●	–	–

SoMove setup software

Presentation

SoMove setup software for PC is used to configure, adjust and debug using the Oscilloscope function, as well as for maintenance, like all Schneider Electric drives and starters.
The software communicates via Bluetooth® wireless link with the drive which is equipped with the Modbus-Bluetooth® adaptor (TCSW AAC13FB).

It is compatible with Altivar 61 drives from software version 1.6 upwards.

Simple Loader and Multi-Loader configuration tools

The Simple Loader tool enables one powered-up drive's configuration to be duplicated on another powered-up drive. It is connected to the drive's RJ45 communication port.

The Multi-Loader tool enables a number of configurations from a PC or drive to be copied and duplicated on another drive; the Altivar 61 drives must be powered up.

References

Description	For drives	Reference	Weight kg
Simple Loader configuration tool Supplied with a preassembled cordset with 2 RJ45 connectors	ATV61●●●●●●	**VW3A8120**	–
Multi-Loader configuration tool Supplied with: - 1 preassembled cordset with 2 RJ45 connectors - 1 preassembled cordset with a USB type A connector and a USB Mini-B type connector - 1 SD memory card - 1 female/female RJ45 adaptor - 4 AA/LR6 1.5 V batteries - 1 anti-shock protection - 1 carrying handle	ATV61●●●●●●	**VW3A8121**	–

(1) SoMove Mobile software requires a mobile phone with minimum features; please consult our website www.schneider-electric.com.

Variable speed drives

Altivar 61

200…240 V 50/60 Hz supply voltage

Table showing possible combinations of ATV61H●●●M3 and ATV61●●●M3X drive options

Motor		Drive	Options				
kW	HP		DC choke	Line choke	Additional EMC input filter	Motor choke	IP 20 kit for motor choke
Single-phase supply voltage: 200…240 V 50/60 Hz							
0.37	0.5	**ATV61H075M3**	VW3A4503	–	VW3A4401	VW3A5101	–
0.75	1	**ATV61HU15M3**	VW3A4505	–	VW3A4401	VW3A5101	–
1.5	2	**ATV61HU22M3**	VW3A4506	–	VW3A4402	VW3A5101	–
2.2	3	**ATV61HU30M3**	VW3A4507	–	VW3A4402	VW3A5102, 103	–
3	–	**ATV61HU40M3**	VW3A4508	VW3A58501	VW3A4402	VW3A5102, 103	–
4	5	**ATV61HU55M3**	VW3A4508	VW3A58502	VW3A4403	VW3A5102, 103	–
5.5	7.5	**ATV61HU75M3**	VW3A4509	VW3A58502	VW3A4404	VW3A5102, 103	–
Three-phase supply voltage: 200…240 V 50/60 Hz							
0.75	1	**ATV61H075M3**	VW3A4503	VW3A4551	VW3A4401	VW3A5101	–
1.5	2	**ATV61HU15M3**	VW3A4505	VW3A4552	VW3A4401	VW3A5101	–
2.2	3	**ATV61HU22M3**	VW3A4506	VW3A4552	VW3A4402	VW3A5101	–
3	–	**ATV61HU30M3**	VW3A4507	VW3A4553	VW3A4402	VW3A5102, 103	–
4	5	**ATV61HU40M3**	VW3A4508	VW3A4554	VW3A4402	VW3A5102, 103	–
5.5	7.5	**ATV61HU55M3**	VW3A4508	VW3A4554	VW3A4403	VW3A5102, 103	–
7.5	10	**ATV61HU75M3**	VW3A4509	VW3A4555	VW3A4404	VW3A5102, 103	–
11	15	**ATV61HD11M3X**	VW3A4510	VW3A4555	VW3A4405	VW3A5103	–
15	20	**ATV61HD15M3X**	VW3A4510	VW3A4556	VW3A4405	VW3A5103	–
18.5	25	**ATV61HD18M3X**	VW3A4511	VW3A4557	VW3A4406	VW3A5103	–
22	30	**ATV61HD22M3X**	VW3A4511	VW3A4557	VW3A4406	VW3A5103	–
30	40	**ATV61HD30M3X**	VW3A4512	VW3A4557	VW3A4408	VW3A5104	VW3A9612
37	50	**ATV61HD37M3X**	VW3A4512	VW3A4557	VW3A4408	VW3A5104	VW3A9612
45	60	**ATV61HD45M3X**	VW3A4512	VW3A4557	VW3A4408	VW3A5104	VW3A9612
55	75	**ATV61HD55M3X**	–	VW3A4559	VW3A4410	VW3A5105	VW3A9612
75	100	**ATV61HD75M3X**	–	VW3A4568	VW3A4410	VW3A5105	VW3A9612
90	125	**ATV61HD90M3X**	–	VW3A4569	VW3A4411	VW3A5106	VW3A9613
Page		1/16	1/65	1/67	1/83	1/84	1/85

Note: *The quantity of certain required options varies according to the drive used. For more information, refer to pages 1/63 to 1/75.*

Sinus filter	Braking resistor	Flush-mounting kit (inside dust and damp proof enclosure)	UL Type 1 conformity kit (outside enclosure)	IP 21 or IP 31 conformity kit (outside enclosure)	Control card fan kit
VW3A5201	VW3A7701	VW3A9501	VW3A9201	VW3A9101	–
VW3A5201	VW3A7702	VW3A9501	VW3A9201	VW3A9101	–
VW3A5202	VW3A7702	VW3A9502	VW3A9202	VW3A9102	–
VW3A5202	VW3A7703	VW3A9502	VW3A9202	VW3A9102	–
VW3A5203	VW3A7703	VW3A9502	VW3A9202	VW3A9102	–
VW3A5203	VW3A7704	VW3A9503	VW3A9203	VW3A9103	–
VW3A5203	VW3A7704	VW3A9504	VW3A9204	VW3A9104	–
VW3A5201	VW3A7701	VW3A9501	VW3A9201	VW3A9101	–
VW3A5201	VW3A7702	VW3A9501	VW3A9201	VW3A9101	–
VW3A5202	VW3A7702	VW3A9502	VW3A9202	VW3A9102	–
VW3A5202	VW3A7703	VW3A9502	VW3A9202	VW3A9102	–
VW3A5203	VW3A7703	VW3A9502	VW3A9202	VW3A9102	–
VW3A5203	VW3A7704	VW3A9503	VW3A9203	VW3A9103	–
VW3A5203	VW3A7704	VW3A9504	VW3A9204	VW3A9104	–
VW3A5204	VW3A7705	VW3A9505	VW3A9205	VW3A9105	–
VW3A5204	VW3A7706	VW3A9505	VW3A9205	VW3A9105	–
VW3A5205	VW3A7707	VW3A9506	VW3A9206	VW3A9106	VW3A9404
VW3A5205	VW3A7707	VW3A9506	VW3A9206	VW3A9106	VW3A9404
VW3A5206	VW3A7708	VW3A9508	VW3A9217	VW3A9117	VW3A9406
VW3A5206	VW3A7709	VW3A9508	VW3A9217	VW3A9117	VW3A9406
VW3A5206	VW3A7709	VW3A9508	VW3A9217	VW3A9117	VW3A9406
VW3A5208	VW3A7713	VW3A9510	VW3A9209	VW3A9109	–
VW3A5208	VW3A7713	VW3A9510	VW3A9209	VW3A9109	–
VW3A5209	VW3A7714	VW3A9511	VW3A9210	VW3A9110	–
1/87	1/61	1/25	1/26	1/27	1/28

Variable speed drives

Altivar 61

380…480 V 50/60 Hz supply voltage

Table showing possible combinations of ATV61H●●●N4 drive options

Motor		Drive	Options							
			DC choke	Line choke	50 Hz passive filters			60 Hz passive filters		
kW	HP				THDI 16%	THDI 10%	THDI 5%	THDI 16%	THDI 10%	THDI 5%
Three-phase supply voltage: 380…480 V 50/60 Hz										
0.75	1	**ATV61H075N4**	VW3A4501	VW3A4551	VW3A46101	VW3A46120	–	VW3A46139	VW3A46158	–
1.5	2	**ATV61HU15N4**	VW3A4502	VW3A4551	VW3A46101	VW3A46120	–	VW3A46139	VW3A46158	–
2.2	3	**ATV61HU22N4**	VW3A4503	VW3A4552	VW3A46101	VW3A46120	–	VW3A46139	VW3A46158	–
3	–	**ATV61HU30N4**	VW3A4503	VW3A4552	VW3A46101	VW3A46120	–	VW3A46139	VW3A46158	–
4	5	**ATV61HU40N4**	VW3A4504	VW3A4552	VW3A46102	VW3A46121	–	VW3A46140	VW3A46159	–
5.5	7.5	**ATV61HU55N4**	VW3A4505	VW3A4553	VW3A46102	VW3A46121	–	VW3A46140	VW3A46159	–
7.5	10	**ATV61HU75N4**	VW3A4506	VW3A4553	VW3A46103	VW3A46122	–	VW3A46141	VW3A46160	–
11	15	**ATV61HD11N4**	VW3A4507	VW3A4554	VW3A46104	VW3A46123	–	VW3A46142	VW3A46161	–
15	20	**ATV61HD15N4**	VW3A4508	VW3A4554	VW3A46105	VW3A46124	–	VW3A46143	VW3A46162	–
18.5	25	**ATV61HD18N4**	VW3A4508	VW3A4555	VW3A46106	VW3A46125	–	VW3A46144	VW3A46163	–
22	30	**ATV61HD22N4**	VW3A4510	VW3A4555	VW3A46107	VW3A46126	–	VW3A46145	VW3A46164	–
30	40	**ATV61HD30N4**	VW3A4510	VW3A4556	VW3A46108	VW3A46127	–	VW3A46146	VW3A46165	–
37	50	**ATV61HD37N4**	VW3A4510	VW3A4556	VW3A46109	VW3A46128	–	VW3A46147	VW3A46166	–
45	60	**ATV61HD45N4**	VW3A4511	VW3A4556	VW3A46110	VW3A46129	–	VW3A46148	VW3A46167	–
55	75	**ATV61HD55N4**	VW3A4511	VW3A4556	VW3A46111	VW3A46130	–	VW3A46149	VW3A46168	–
75	100	**ATV61HD75N4**	VW3A4511	VW3A4557	VW3A46112	VW3A46131	–	VW3A46150	VW3A46169	–
90	125	**ATV61HD90N4**	–	VW3A4558 *(1)*	–	VW3A46112	VW3A46131	–	VW3A46151	VW3A46170
110	150	**ATV61HC11N4**	–	VW3A4559 *(1)*	–	VW3A46113	VW3A46132	–	VW3A46152	VW3A46171
132	200	**ATV61HC13N4**	–	VW3A4560 *(1)*	–	VW3A46114	VW3A46133	–	VW3A46153	VW3A46172
160	250	**ATV61HC16N4**	–	VW3A4568 *(1)*	–	VW3A46116	VW3A46135	–	VW3A46153	VW3A46172
200	300	**ATV61HC22N4**	–	VW3A4561 *(1)*	–	VW3A46118	VW3A46137	–	VW3A46155	VW3A46174
220	350	**ATV61HC22N4**	–	VW3A4569 *(1)*	–	VW3A46118	VW3A46137	–	VW3A46155	VW3A46174
250	400	**ATV61HC25N4**	–	VW3A4569 *(1)*	–	VW3A46119	VW3A46138	–	VW3A46157	VW3A46176
280	450	**ATV61HC31N4**	–	VW3A4564 *(1)*	–	VW3A46115	VW3A46134	–	VW3A46157	VW3A46176
315	500	**ATV61HC31N4**	–	VW3A4564 *(1)*	–	VW3A46116	VW3A46135	–	VW3A46153	VW3A46172
355	–	**ATV61HC40N4**	–	VW3A4565 *(1)*	–	VW3A46116	VW3A46135	–	VW3A46154	VW3A46173
400	600	**ATV61HC40N4**	–	VW3A4565 *(1)*	–	VW3A46117	VW3A46136	–	VW3A46154	VW3A46173
500	700	**ATV61HC50N4**	–	VW3A4569 *(1)*	–	VW3A46119	VW3A46138	–	VW3A46156	VW3A46175
560	800	**ATV61HC63N4**	–	VW3A4564 *(1)*	–	VW3A46117	VW3A46136	–	VW3A46157	VW3A46176
630	900	**ATV61HC63N4**	–	VW3A4564 *(1)*	–	VW3A46118	VW3A46137	–	VW3A46155	VW3A46174
Page		1/17	1/65	1/67	1/70	1/70	1/72	1/73	1/73	1/75

Table showing possible combinations of ATV61QC●●N4 drive options

Motor		Drive	Options							
			DC choke	Line choke	50 Hz passive filters			60 Hz passive filters		
kW	HP				THDI 16%	THDI 10%	THDI 5%	THDI 16%	THDI 10%	THDI 5%
Three-phase supply voltage: 380…480 V 50/60 Hz										
110	150	**ATV61QC11N4**	–	VW3A4559 *(1)*	–	VW3A46113	VW3A46132	–	VW3A46152	VW3A46171
132	200	**ATV61QC13N4**	–	VW3A4560 *(1)*	–	VW3A46114	VW3A46133	–	VW3A46153	VW3A46172
160	250	**ATV61QC16N4**	–	VW3A4568 *(1)*	–	VW3A46116	VW3A46135	–	VW3A46153	VW3A46172
200	300	**ATV61QC20N4**	–	VW3A4561 *(1)*	–	VW3A46118	VW3A46137	–	VW3A46155	VW3A46174
220	350	**ATV61QC25N4**	–	VW3A4569 *(1)*	–	VW3A46118	VW3A46137	–	VW3A46155	VW3A46174
250	400	**ATV61QC25N4**	–	VW3A4569 *(1)*	–	VW3A46119	VW3A46138	–	VW3A46157	VW3A46176
280	450	**ATV61QC31N4**	–	VW3A4564 *(1)*	–	VW3A46115	VW3A46134	–	VW3A46157	VW3A46176
315	500	**ATV61QC31N4**	–	VW3A4564 *(1)*	–	VW3A46116	VW3A46135	–	VW3A46153	VW3A46172
355	–	**ATV61QC40N4**	–	VW3A4561 *(1)*	–	VW3A46116	VW3A46135	–	VW3A46154	VW3A46173
400	600	**ATV61QC40N4**	–	VW3A4561 *(1)*	–	VW3A46117	VW3A46136	–	VW3A46154	VW3A46173
500	700	**ATV61QC50N4**	–	VW3A4563 *(1)*	–	VW3A46119	VW3A46138	–	VW3A46156	VW3A46175
560	800	**ATV61QC63N4**	–	VW3A4573 *(1)*	–	VW3A46117	VW3A46136	–	VW3A46157	VW3A46176
630	900	**ATV61QC63N4**	–	VW3A4573 *(1)*	–	VW3A46118	VW3A46137	–	VW3A46155	VW3A46174
Page		1/18	–	1/67	–	1/70	1/72	–	1/73	1/75

(1) For drives with a power rating of 90 kW or more without an integrated DC choke, a line choke must be used. This is the case for ATV61HD90N4D to ATV61HC63N4D drives (see page 1/23) and for ATV61QC●●N4 drives.
ATV61HD90N4D to ATV61HC63N4D drives are variants without an integrated DC choke of ATV61HD90N4 to ATV61HC63N4 drives.

Note: *The quantity of certain required options varies according to the drive used. For more information, refer to pages 1/63 to 1/75.*

Additional EMC input filter	Motor choke	IP 20 kit for motor choke	Resistance braking unit	Braking resistor	Sinus filter	Flush-mounting kit *(4)*	UL Type 1 conformity kit *(5)*	IP 21 or IP 31 conformity kit *(5)*	Control card fan kit
VW3A4401	VW3A5101, 102, 103	–	–	VW3A7701	VW3A5201	VW3A9501	VW3A9201	VW3A9101	–
VW3A4401	VW3A5101, 102, 103	–	–	VW3A7701	VW3A5201	VW3A9501	VW3A9201	VW3A9101	–
VW3A4401	VW3A5101, 102, 103	–	–	VW3A7701	VW3A5201	VW3A9501	VW3A9201	VW3A9101	–
VW3A4402	VW3A5101, 102, 103	–	–	VW3A7701	VW3A5201	VW3A9502	VW3A9202	VW3A9102	–
VW3A4402	VW3A5101, 102, 103	–	–	VW3A7701	VW3A5201	VW3A9502	VW3A9202	VW3A9102	–
VW3A4403	VW3A5102, 103, 104	VW3A9612	–	VW3A7702	VW3A5202	VW3A9503	VW3A9203	VW3A9103	–
VW3A4403	VW3A5102. 103, 104	VW3A9612	–	VW3A7702	VW3A5203	VW3A9503	VW3A9203	VW3A9103	–
VW3A4404	VW3A5102, 103, 104	VW3A9612	–	VW3A7703	VW3A5203	VW3A9504	VW3A9204	VW3A9104	–
VW3A4405	VW3A5102, 103, 104	VW3A9612	–	VW3A7703	VW3A5203	VW3A9505	VW3A9205	VW3A9105	–
VW3A4405	VW3A5102, 103, 104	VW3A9612	–	VW3A7704	VW3A5204	VW3A9505	VW3A9205	VW3A9105	–
VW3A4406	VW3A5103, 104	VW3A9612	–	VW3A7704	VW3A5204	VW3A9506	VW3A9206	VW3A9106	VW3A9404
VW3A4407	VW3A5103, 104	VW3A9612	–	VW3A7704	VW3A5204	VW3A9507	VW3A9207	VW3A9107	VW3A9405
VW3A4407	VW3A5103, 104	VW3A9612	–	VW3A7705	VW3A5205	VW3A9507	VW3A9207	VW3A9107	VW3A9405
VW3A4408	VW3A5104	VW3A9612	–	VW3A7707	VW3A5205	VW3A9509	VW3A9208	VW3A9108	VW3A9407
VW3A4408	VW3A5104	VW3A9612	–	VW3A7707	VW3A5206	VW3A9509	VW3A9208	VW3A9108	VW3A9407
VW3A4408	VW3A5104	VW3A9612	–	VW3A7707	VW3A5206	VW3A9509	VW3A9208	VW3A9108	VW3A9407
VW3A4410	VW3A5104	VW3A9612	–	VW3A7710	VW3A5207	VW3A9510	VW3A9209	VW3A9109	–
VW3A4410	VW3A5105	VW3A9612	–	VW3A7710	VW3A5207	VW3A9510	VW3A9209	VW3A9109	–
VW3A4410	VW3A5105	VW3A9612	–	VW3A7711	VW3A5208	VW3A9511	VW3A9210	VW3A9110	–
VW3A4410	VW3A5106	VW3A9613	–	VW3A7711	VW3A5208	VW3A9512	VW3A9211	VW3A9111	–
VW3A4411	VW3A5106	VW3A9613	–	VW3A7712	VW3A5209	VW3A9513	VW3A9212	VW3A9112	–
VW3A4411	VW3A5106	VW3A9613	–	VW3A7712	VW3A5209	VW3A9513	VW3A9212	VW3A9112	–
VW3A4411	VW3A5107	VW3A9613	VW3A7101	VW3A7715	VW3A5210	VW3A9514, 515	VW3A9213, 214	VW3A9113, 114	–
VW3A4411	VW3A5107	VW3A9613	VW3A7101	VW3A7716	VW3A5210	VW3A9514, 515	VW3A9213, 214	VW3A9113, 114	–
VW3A4411	VW3A5107	VW3A9613	VW3A7101	VW3A7716	VW3A5210	VW3A9514, 515	VW3A9213, 214	VW3A9113, 114	–
VW3A4412	VW3A5107	VW3A9613	VW3A7102	VW3A7717	VW3A5210	–	–	VW3A9115	–
VW3A4412	VW3A5108	VW3A9613	VW3A7102	VW3A7717	VW3A5211	–	–	VW3A9115	–
VW3A4412	VW3A5108	VW3A9613	VW3A7102	VW3A7717	VW3A5211	–	–	VW3A9115	–
VW3A4413	VW3A5108	VW3A9613	VW3A7102	VW3A7718	VW3A5211	–	–	VW3A9116	–
VW3A4413	VW3A5108	VW3A9613	VW3A7102	VW3A7718	VW3A5211	–	–	VW3A9116	–
1/81	1/84	1/85	1/60	1/62	1/87	1/25	1/26	1/27	1/28

Additional EMC input filter	Motor choke	IP 20 kit for motor choke	Resistance braking unit	Braking resistor	Sinus filter	Flush-mounting kit *(2)*	UL Type 1 conformity kit *(3)*	IP 21 or IP 31 conformity kit *(3)*	Control card fan kit
VW3A4410	VW3A5104	VW3A9612	–	VW3A7710	VW3A5207	–	–	–	–
VW3A4410	VW3A5105	VW3A9612	–	VW3A7711	VW3A5208	–	–	–	–
VW3A4410	VW3A5105	VW3A9612	–	VW3A7711	VW3A5208	–	–	–	–
VW3A4411	VW3A5106	VW3A9613	VW3A7101	VW3A7712	VW3A5209	–	–	–	–
VW3A4411	VW3A5106	VW3A9613	VW3A7101	VW3A7712	VW3A5209	–	–	–	–
VW3A4411	VW3A5106	VW3A9613	VW3A7101	VW3A7715	VW3A5210	–	–	–	–
VW3A4411	VW3A5107	VW3A9613	VW3A7101	VW3A7716	VW3A5210	–	–	–	–
VW3A4411	VW3A5107	VW3A9613	VW3A7101	VW3A7716	VW3A5210	–	–	–	–
VW3A4412	VW3A5107	VW3A9613	VW3A7102	VW3A7717	VW3A5210	–	–	–	–
VW3A4412	VW3A5107	VW3A9613	VW3A7102	VW3A7717	VW3A5211	–	–	–	–
VW3A4412	VW3A5108	VW3A9613	VW3A7102	VW3A7717	VW3A5211	–	–	–	–
VW3A4413	VW3A5108	VW3A9613	VW3A7102	VW3A7718	VW3A5211	–	–	–	–
VW3A4413	VW3A5108	VW3A9613	VW3A7102	VW3A7718	VW3A5211	–	–	–	–
1/81	1/84	1/85	1/60	1/62	1/87	–	–	–	–

(2) In dust and damp proof enclosure.
(3) Outside enclosure.

Variable speed drives

Altivar 61

380…480 V 50/60 Hz supply voltage

Table showing possible combinations of ATV61W●●●N4 and ATV61W●●●N4C drive options

Motor		Drive	Options					
			Line choke	50 Hz passive filters		60 Hz passive filters		Motor choke
kW	*HP*			THDI 10%	THDI 5%	THDI 10%	THDI 5%	
Three-phase supply voltage: 380…480 V 50/60 Hz								
0.75	*1*	**ATV61W075N4 ATV61W075N4C**	VW3A4551	VW3A46101	VW3A46120	VW3A46139	VW3A46158	VW3A5101, 102, 103
1.5	*2*	**ATV61WU15N4 ATV61WU15N4C**	VW3A4551	VW3A46101	VW3A46120	VW3A46139	VW3A46158	VW3A5101, 102, 103
2.2	*3*	**ATV61WU22N4 ATV61WU22N4C**	VW3A4552	VW3A46101	VW3A46120	VW3A46139	VW3A46158	VW3A5101, 102, 103
3	–	**ATV61WU30N4 ATV61WU30N4C**	VW3A4552	VW3A46101	VW3A46120	VW3A46139	VW3A46158	VW3A5101, 102, 103
4	*5*	**ATV61WU40N4 ATV61WU40N4C**	VW3A4552	VW3A46102	VW3A46121	VW3A46140	VW3A46159	VW3A5101, 102, 103
5.5	*7.5*	**ATV61WU55N4 ATV61WU55N4C**	VW3A4553	VW3A46102	VW3A46121	VW3A46140	VW3A46159	VW3A5102, 103, 104
7.5	*10*	**ATV61WU75N4 ATV61WU75N4C**	VW3A4553	VW3A46103	VW3A46122	VW3A46141	VW3A46160	VW3A5102, 103, 104
11	*15*	**ATV61WD11N4 ATV61WD11N4C**	VW3A4554	VW3A46104	VW3A46123	VW3A46142	VW3A46161	VW3A5102, 103, 104
15	*20*	**ATV61WD15N4 ATV61WD15N4C**	VW3A4554	VW3A46105	VW3A46124	VW3A46143	VW3A46162	VW3A5102, 103, 104
18.5	*25*	**ATV61WD18N4 ATV61WD18N4C**	VW3A4555	VW3A46106	VW3A46125	VW3A46144	VW3A46163	VW3A5102, 103, 104
22	*30*	**ATV61WD22N4 ATV61WD22N4C**	VW3A4555	VW3A46107	VW3A46126	VW3A46145	VW3A46164	VW3A5103, 104
30	*40*	**ATV61WD30N4 ATV61WD30N4C**	VW3A4556	VW3A46108	VW3A46127	VW3A46146	VW3A46165	VW3A5103, 104
37	*50*	**ATV61WD37N4 ATV61WD37N4C**	VW3A4556	VW3A46109	VW3A46128	VW3A46147	VW3A46166	VW3A5103, 104
45	*60*	**ATV61WD45N4 ATV61WD45N4C**	VW3A4556	VW3A46110	VW3A46129	VW3A46148	VW3A46167	VW3A5104
55	*75*	**ATV61WD55N4**	VW3A4556	VW3A46111	VW3A46130	VW3A46149	VW3A46168	VW3A5104
55	*75*	**ATV61WD55N4C**	VW3A4556	VW3A46111	VW3A46130	VW3A46149	VW3A46168	VW3A5104
75	*100*	**ATV61WD75N4**	VW3A4557	VW3A46112	VW3A46131	VW3A46150	VW3A46169	VW3A5104
75	*100*	**ATV61WD75N4C**	VW3A4557	VW3A46112	VW3A46131	VW3A46150	VW3A46169	VW3A5104
90	*125*	**ATV61WD90N4**	VW3A4558	VW3A46112	VW3A46131	VW3A46151	VW3A46170	VW3A5104
90	*125*	**ATV61WD90N4C**	VW3A4558	VW3A46112	VW3A46131	VW3A46151	VW3A46170	VW3A5104
Page		1/19	1/67	1/70	1/72	1/73	1/75	1/84

Note: *The quantity of certain required options varies according to the drive used. For more information, refer to pages 1/63 to 1/75.*

Braking resistor	Ready-assembled IP 54 base plate	IP 20 kit for motor choke	Sinus filter
VW3A7701	VW3A9901	–	VW3A5201
VW3A7701	VW3A9901	–	VW3A5201
VW3A7701	VW3A9901	–	VW3A5201
VW3A7701	VW3A9901	–	VW3A5201
VW3A7701	VW3A9901	–	VW3A5201
VW3A7701	VW3A9901	VW3A9612	VW3A5202
VW3A7702	VW3A9902	VW3A9612	VW3A5203
VW3A7702	VW3A9902	VW3A9612	VW3A5203
VW3A7703	VW3A9903	VW3A9612	VW3A5203
VW3A7703	VW3A9904	VW3A9612	VW3A5204
VW3A7704	VW3A9904	VW3A9612	VW3A5204
VW3A7704	VW3A9905	VW3A9612	VW3A5204
VW3A7704	VW3A9906	VW3A9612	VW3A5205
VW3A7705	VW3A9906	VW3A9612	VW3A5205
VW3A7706	VW3A9907	VW3A9612	VW3A5206
VW3A7706	VW3A9909	VW3A9612	VW3A5206
VW3A7706	VW3A9907	VW3A9612	VW3A5206
VW3A7706	VW3A9909	VW3A9612	VW3A5206
VW3A7706	VW3A9908	VW3A9612	VW3A5207
VW3A7706	VW3A9910	VW3A9612	VW3A5207
1/62	1/29	1/85	1/87

Variable speed drives

Altivar 61

500...690 V 50/60 Hz supply voltage

Table showing possible combinations of ATV61H●●●S6X drive options

Motor		Drive	Options		
			Line choke	Motor choke	Braking resistor
500 V	*575 V*				
kW	*HP*				
Three-phase supply voltage: 500…600 V 50/60 Hz					
2.2	*3*	**ATV61HU22S6X**	VW3A4551	VW3A5102, 103, 104	VW3A7702
3	–	**ATV61HU30S6X**	VW3A4552	VW3A5102, 103, 104	VW3A7702
4	*5*	**ATV61HU40S6X**	VW3A4552	VW3A5102, 103, 104	VW3A7702
5.5	*7.5*	**ATV61HU55S6X**	VW3A4552	VW3A5102, 103, 104	VW3A7702
7.5	*10*	**ATV61HU75S6X**	VW3A4553	VW3A5102, 103, 104	VW3A7702
Page		1/21	1/68	1/84	1/63

Note: *The quantity of certain required options varies according to the drive used. For more information, refer to pages 1/63 to 1/75.*

Flush-mounting kit (inside dust and damp proof enclosure)	UL Type 1 conformity kit (outside enclosure)	IP 21 or IP 31 conformity kit (outside enclosure)
VW3A9504	VW3A9204	VW3A9104
VW3A9504	VW3A9204	VW3A9104
VW3A9504	VW3A9204	VW3A9104
VW3A9504	VW3A9204	VW3A9104
VW3A9504	VW3A9204	VW3A9104
1/25	1/26	1/27

Variable speed drives

Altivar 61

500...690 V 50/60 Hz supply voltage

Table showing possible combinations of ATV61H●●●Y drive options

Motor			Drive	Options					
500 V kW	*575 V HP*	690 V kW		Line choke	Sinus filter	Motor choke	IP 20 kit for motor choke	Resistance braking unit	Braking resistor
Three-phase supply voltage: 500…690 V 50/60 Hz									
2.2	*3*	3	**ATV61HU30Y**	VW3A4551	–	VW3A5102, 103, 104	VW3A9612	–	VW3A7701
3	–	4	**ATV61HU40Y**	VW3A4552	–	VW3A5102, 103, 104	VW3A9612	–	VW3A7701
4	*5*	5.5	**ATV61HU55Y**	VW3A4552	–	VW3A5102, 103, 104	VW3A9612	–	VW3A7701
5.5	*7.5*	7.5	**ATV61HU75Y**	VW3A4552	–	VW3A5102, 103, 104	VW3A9612	–	VW3A7701
7.5	*10*	11	**ATV61HD11Y**	VW3A4553	–	VW3A5102, 103, 104	VW3A9612	–	VW3A7702
11	*15*	15	**ATV61HD15Y**	VW3A4553	–	VW3A5103, 104	VW3A9612	–	VW3A7702
15	*20*	18.5	**ATV61HD18Y**	VW3A4554	–	VW3A5103, 104	VW3A9612	–	VW3A7703
18.5	*25*	22	**ATV61HD22Y**	VW3A4554	–	VW3A5103, 104	VW3A9612	–	VW3A7703
22	*30*	30	**ATV61HD30Y**	VW3A4555	–	VW3A5103, 104	VW3A9612	–	VW3A7704
30	*40*	37	**ATV61HD37Y**	VW3A4555	–	VW3A5104	VW3A9612	–	VW3A7704
37	*50*	45	**ATV61HD45Y**	VW3A4555	–	VW3A5104	VW3A9612	–	VW3A7704
45	*60*	55	**ATV61HD55Y**	VW3A4556	–	VW3A5104	VW3A9612	–	VW3A7705
55	*75*	75	**ATV61HD75Y**	VW3A4556	–	VW3A5104	VW3A9612	–	VW3A7705
75	*100*	90	**ATV61HD90Y**	VW3A4556	–	VW3A5104	VW3A9612	–	VW3A7707
90	*125*	110	**ATV61HC11Y**	VW3A4570	VW3A5212	VW3A5104	VW3A9612	–	VW3A7806
110	*150*	132	**ATV61HC13Y**	VW3A4570	VW3A5212	VW3A5104	VW3A9612	–	VW3A7806
132	–	160	**ATV61HC16Y**	VW3A4571	VW3A5212	VW3A5104	VW3A9612	–	VW3A7805
160	*200*	200	**ATV61HC20Y**	VW3A4571	VW3A5212	VW3A5105	VW3A9612	–	VW3A7805
200	*250*	250	**ATV61HC25Y**	VW3A4560	VW3A5213	VW3A5105	VW3A9612	VW3A7103	VW3A7806
250	*350*	315	**ATV61HC31Y**	VW3A4572	VW3A5213	VW3A5106	VW3A9613	VW3A7103	VW3A7716
315	*450*	400	**ATV61HC40Y**	VW3A4572	VW3A5213	VW3A5106	VW3A9613	VW3A7103	VW3A7814
400	*550*	500	**ATV61HC50Y**	VW3A4568	VW3A5214	VW3A5107	VW3A9613	VW3A7104	VW3A7717
500	*700*	630	**ATV61HC63Y**	VW3A4572	VW3A5214	VW3A5107	VW3A9613	VW3A7104	VW3A7718
630	*800*	800	**ATV61HC80Y**	VW3A4572	VW3A5214	VW3A5108	VW3A9613	VW3A7104	VW3A7816
Page			1/21	1/68	1/87	1/84	1/85	1/60	1/63

Table showing possible combinations of ATV61Q●●●Y drive options

Motor			Drive	Options					
500 V kW	*575 V HP*	690 V kW		Line choke (1 to 2 per drive)	Sinus filter	Motor choke	IP 20 kit for motor choke	Resistance braking unit	Braking resistor (1 to 2 per drive)
Three-phase supply voltage: 500…690 V 50/60 Hz									
110	*150*	132	**ATV61QC13Y**	VW3A4570	–	VW3A5104	VW3A9612	–	VW3A7806
132	–	160	**ATV61QC16Y**	VW3A4571	–	VW3A5105	VW3A9612	–	VW3A7805
160	*200*	200	**ATV61QC20Y**	VW3A4571	–	VW3A5105	VW3A9612	–	VW3A7805
200	*250*	250	**ATV61QC25Y**	VW3A4560	–	VW3A5106	VW3A9612	VW3A7103	VW3A7806
250	*350*	315	**ATV61QC31Y**	VW3A4572	–	VW3A5106	VW3A9612	VW3A7103	VW3A7716
315	*450*	400	**ATV61QC40Y**	VW3A4572	–	VW3A5107	VW3A9613	VW3A7103	VW3A7814
400	*550*	500	**ATV61QC50Y**	VW3A4568	–	VW3A5107	VW3A9613	VW3A7104	VW3A7717
500	*700*	630	**ATV61QC63Y**	VW3A4572	–	VW3A5108	VW3A9613	VW3A7104	VW3A7718
630	*800*	800	**ATV61QC80Y**	VW3A4572	–	VW3A5108	VW3A9613	VW3A7104	VW3A7816
Page			1/22	1/68	–	1/84	1/85	1/60	1/63

Note: *The quantity of certain required options varies according to the drive used. For more information, refer to pages 1/63 to 1/75.*

Flush-mounting kit (inside dust and damp proof enclosure)	UL Type 1 conformity kit (outside enclosure)	IP 21 or IP 31 conformity kit (outside enclosure)	Control card fan kit
VW3A9506	VW3A9206	VW3A9106	VW3A9404
VW3A9506	VW3A9206	VW3A9106	VW3A9404
VW3A9506	VW3A9206	VW3A9106	VW3A9404
VW3A9506	VW3A9206	VW3A9106	VW3A9404
VW3A9506	VW3A9206	VW3A9106	VW3A9404
VW3A9506	VW3A9206	VW3A9106	VW3A9404
VW3A9506	VW3A9206	VW3A9106	VW3A9404
VW3A9506	VW3A9206	VW3A9106	VW3A9404
VW3A9506	VW3A9206	VW3A9106	VW3A9404
VW3A9509	VW3A9208	VW3A9108	VW3A9407
VW3A9509	VW3A9208	VW3A9108	VW3A9407
VW3A9509	VW3A9208	VW3A9108	VW3A9407
VW3A9509	VW3A9208	VW3A9108	VW3A9407
VW3A9509	VW3A9208	VW3A9108	VW3A9407
VW3A9512	VW3A9211	VW3A9111	–
VW3A9512	VW3A9211	VW3A9111	–
VW3A9512	VW3A9211	VW3A9111	–
VW3A9512	VW3A9211	VW3A9111	–
VW3A9514, 515	VW3A9213, 214	VW3A9113, 114	–
VW3A9514, 515	VW3A9213, 214	VW3A9113, 114	–
VW3A9514, 515	VW3A9213, 214	VW3A9113, 114	–
–	–	VW3A9116	–
–	–	VW3A9116	–
–	–	VW3A9116	–
1/25	1/26	1/27	1/30

Flush-mounting kit (inside dust and damp proof enclosure)	UL Type 1 conformity kit (outside enclosure)	IP 21 or IP 31 conformity kit (outside enclosure)	Control card fan kit
–	–	–	–
–	–	–	–
–	–	–	–
–	–	–	–
–	–	–	–
–	–	–	–
–	–	–	–
–	–	–	–
–	–	–	–
–	–	–	–

1

List of options common to Altivar 61 drives

Description	Reference	Page
Logic input adaptor		
Adaptor for 115 V ∿ logic inputs	VW3A3101	1/29
HMI terminal		
Remote graphic display terminal	VW3A1101	1/31
Encoder interface cards *(1)*		
With RS 422 compatible differential outputs	VW3A3401	1/46
With open collector outputs	VW3A3403, 404	1/46
With push-pull outputs	VW3A3405…407	1/46
I/O expansion cards *(1)*		
Logic	VW3A3201	1/47
Extended	VW3A3202	1/47
Multi-pump cards *(1)*		
Multi-pump card	VW3A3502	1/49
Water solution multi-pump card	VW3A3503	1/49
Programmable card *(1)*		
Controller Inside programmable card	VW3A3501	1/53
SoMove setup software		
SoMove setup software	Available on our website www.schneider-electric.com	

List of communication cards *(1)*

Description	Reference	Page
Modbus TCP Daisy Chain	VW3A3310D	1/58
EtherNet/IP	VW3A3316	1/58
EtherNet/IP (RSTP)	VW3A3320	1/58
DeviceNet	VW3A3309	1/58
InterBus	VW3A3304	1/58
CC-Link	VW3A3317	1/58
Modbus/Uni-Telway	VW3A3303	1/58
PROFIBUS DP V0	VW3A3307	1/59
PROFIBUS DP V1	VW3A3307S371	1/59
LonWorks	VW3A3312	1/59
METASYS N2	VW3A3313	1/59
APOGEE FLN	VW3A3314	1/59
BACnet	VW3A3319	1/59
Profinet	VW3A3327	1/59
EtherCAT	VW3A3326	1/59
Ethernet POWERLINK	VW3A3321	1/59

(1) For card compatibility table, see opposite.

Card compatibility table *(1)*

Type of card	Encoder interface VW3A340●	Logic I/O VW3A3201	Extended I/O VW3A3202	Multi-pump VW3A3502, 503	Programmable Controller inside VW3A3501	Communication VW3A33●●
Encoder interface VW3A340●						
Logic I/O VW3A3201						
Extended I/O VW3A3202						
Multi-pump VW3A3502, 503						
Programmable Controller inside VW3A3501						
Communication VW3A33●●						

Combination possible

Combination not possible

(1) Maximum combination involving two types of card is 2.

Variable speed drives

Altivar 61

Option: Encoder interface cards

Presentation

PF121623

VW3A3401 encoder interface card

Encoder interface cards are used for machine safety, irrespective of the control type:
- Overspeed detection
- Load slip detection

Three types of card are available depending on the encoder technology:
- RS 422 compatible differential outputs
- Open collector outputs (NPN)
- Push-pull outputs

The Altivar 61 variable speed drive can only take one encoder interface card. Please refer to the card compatibility table on page 1/45.

The interface encoder card is inserted in a dedicated slot.

It is protected against short circuits and overloads.

References

Description	Used with encoder *(1)*	Voltage	Maximum current	Maximum cable length	Maximum operating frequency	Reference	Weight
		V	mA	m	kHz		kg
Encoder interface card with RS422 compatible differential outputs	XCC1●●●●●●●X XCC1●●●●●●●R XCC1●●●●●●●RN	5	200	50	300	**VW3A3401**	0.200
Encoder interface cards with open collector outputs	–	12	175	500	300	**VW3A3403**	0.200
		15	175	500	300	**VW3A3404**	0.200
Encoder interface cards with push-pull outputs	XCC1●●●●●●●Y	12	175	500	300	**VW3A3405**	0.200
	XCC1●●●●●●●K	15	175	500	300	**VW3A3406**	0.200
	XCC1●●●●●●●KN	24	100	500	300	**VW3A3407**	0.200

(1) To determine the complete encoder reference, please refer to the "Detection for automation solutions - OsiSense" catalogue or our website www.schneider-electric.com.

Drive/option combinations:
pages 1/34 to 1/45

Variable speed drives

Altivar 61

Option: I/O expansion cards

Presentation

PF121620

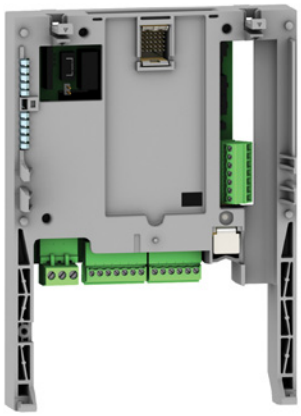

VW3A3202 extended I/O card

Altivar 61 variable speed drives can be adapted for more complex or extensive applications by installing I/O expansion cards.

Two models are available:

■ Card with logic I/O featuring:
- □ 1 relay logic output (“C/O” contact)
- □ 4 x 24 V ⎓ positive or negative logic inputs
- □ 2 x 24 V ⎓ positive or negative logic open collector outputs
- □ 1 input for 6 PTC probes *(1)*

■ Card with extended I/O featuring:
- □ 1 differential current analog input 0...20 mA
- □ 1 software-configurable voltage (⎓ 0...10 V) or current (0...20 mA) analog input
- □ 2 software-configurable voltage (± 10 V ⎓, 0...10 V) or current (0...20 mA) analog outputs
- □ 1 relay logic output
- □ 4 x 24 V ⎓ positive logic (Source) or negative logic (Sink) inputs
- □ 2 x 24 V ⎓ positive or negative logic open collector outputs
- □ 1 input for 6 PTC probes
- □ 1 frequency control input

The Altivar 61 variable speed drive can only take one I/O expansion card with the same reference.
Please refer to the card compatibility table on page 1/45.

References

Designation	Type of I/O						Reference	Weight kg
	Logic input	Logic output	Analog input	Analog output	Input for PTC probes *(1)*	Frequency control input		
Logic I/O card	4	3	–	–	1	–	**VW3A3201**	0.300
Extended I/O card	4	3	2	2	1	1	**VW3A3202**	0.300

(1) This PTC probe input must never be used to protect an ATEX motor in applications in explosive atmospheres. Please refer to the ATEX guide which is available on our website www.schneider-electric.com.

Drive/option combinations:
pages 1/34 to 1/45

Variable speed drives

Altivar 61

Option: Multi-pump cards

Presentation

The Altivar 61 drive provides an automation solution that is ideal for the requirements of water treatment:

- It incorporates all the application functions for managing your pumps, such as sleep, wake-up, zero flow detection, fluid absence detection, underload or overload detection and PID regulator.
- It is used to adjust the operating point of pumps using control profiles.
- It protects your pumps:

motor thermal protection, PTC management, low speed detection and time delay

Multi-pump cards can adapt drive operation to the specific requirements of the installation.
They reduce costs and increase the service life of equipment by intelligently managing the operating time of each pump.
Various predefined configurable applications are sold by Schneider Electric and its partners.

In order to protect our know-how, it is not possible to transfer the program from the card to a PC.

A single multi-pump card can be installed in the Altivar 61. It can be combined with another option card (I/O expansion or communication). Please refer to the card compatibility table on page 1/45.

Each multi-pump card consists of:

- 10 x 24 V ⎓ logic inputs, 2 of which can be used for 2 counters or 4 of which can be used for 2 incremental encoders
- 2 x 0…20 mA current analog inputs, impedance 250 Ω
- 6 x 24 V ⎓ positive logic (Source) open collector outputs
- 2 x 0…20 mA current analog outputs, impedance 500 Ω
- A master port for the CANopen machine bus

If the power consumption does not exceed 200 mA, this card can be powered by ATV61H●●●●● drives. Otherwise, an external 24 V ⎓ power supply must be used. ATV61W●●●N4A24 drives incorporate a 24 V ⎓ power supply, allowing additional consumption of 250 mA.

***Note**: It is recommended that an OsiSense XM electronic pressure sensor, type XML F or XML G, is added to the installation. Please consult our "Detection for automation solutions - OsiSense" catalogue or our website www.schneider-electric.com.*

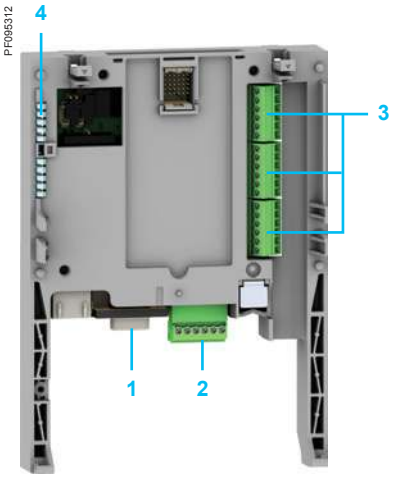

Description

1 9-way male SUB-D connector for connection to the CANopen machine bus

2 Connector with removable screw terminals, 6 contacts at intervals of 3.81 for the 24 V ⎓ power supply and 4 logic inputs

3 3 connectors with removable screw terminals, 6 contacts at intervals of 3.81 for 6 logic inputs, 6 logic outputs, 2 analog inputs, 2 analog outputs and 2 commons

4 5 LEDs:

- 1 to indicate the presence of the 24 V ⎓ power supply
- 1 to indicate a program execution fault
- 2 to indicate the CANopen machine bus communication status
- 1 controlled by the application program

Drive/option combinations:
pages 1/34 to 1/45

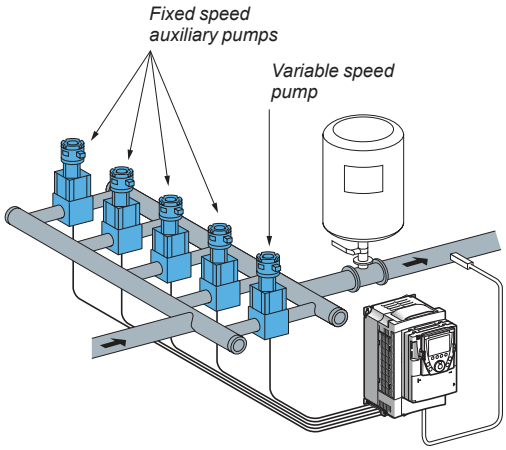

Example configuration of a pumping system with the VW3A3502 multi-pump card

VW3A3502 multi-pump card

The **VW3A3502** multi-pump card ensures compatibility of pump applications developed for an Altivar 38 drive with an Altivar 61, without reprogramming.

With this card, a complete pumping installation (up to 5 pumps) can be controlled with a single drive, providing constant pressure.

It incorporates the following operating modes:
- Single or multiple variable
- Single or multiple variable with changeover of auxiliary pumps
- Single or multiple variable with limitation of operating time between pumps

These last two operating modes can be combined.

Applications

It is specially designed for applications such as:
- Constant pressure water distribution and pumping systems
- Booster stations

VW3A3503 Water solution multi-pump card

The **VW3A3503** multi-pump card is not compatible with pump applications developed for an Altivar 38 drive.

With this card, a complete pumping installation (up to 4 pumps) can be controlled with a single drive, providing constant pressure.

It incorporates the single variable function as well as the Jockey management function which is primarily used to manage booster or priming pumps. It also compensates for losses in installations.

Applications

It is specially designed for applications such as:
- Irrigation stations
- Sprinkling stations

Continuity of service for your installation

If a pump is faulty (information on the LIx logic input) it is not taken into account and the start and stop conditions are provided by the other pumps.

Each pump can:
- Display the operating time
- Reset the counter
- Save the operating times

Each card also incorporates an OFF mode, used during maintenance operations.

References

Description		Reference	Weight kg
Multi-pump card	Equipped with one 9-way male SUB-D connector	**VW3A3502**	0.320
Water solution multi-pump card	Equipped with one 9-way male SUB-D connector	**VW3A3503**	0.320

Drive/option combinations:
pages 1/34 to 1/45

Variable speed drives

Altivar 61

Option: Controller Inside programmable card

Presentation

The Controller Inside programmable card is used to adapt the variable speed drive to specific applications by integrating control system functions.

Various predefined configurable applications are sold by Schneider Electric and its partners.
The PS 1131 software workshop is used for programming and debugging new applications, quickly and in an open-ended manner in accordance with standard IEC 61131-3.
It is not possible to transfer the program from the card to the PC, therefore know-how is protected.

A single Controller Inside programmable card can be installed in the Altivar 61 drive. It can be combined with another option card (I/O expansion or communication). Please refer to the card compatibility table on page 1/45.

The Controller Inside programmable card features:
- 10 x 24 V ⎓ logic inputs, 2 of which can be used for 2 counters or 4 of which can be used for 1 incremental encoder and/or 3 counters
- 2 x 0…20 mA current analog inputs, impedance 500 Ω
- 6 x 24 V ⎓ positive logic (Source) open collector outputs
- 2 x 0…20 mA current analog inputs, impedance 500 Ω
- A master port for the CANopen machine bus, for controlling other drives and communication with I/O modules and sensors
- A PC port for programming using the PS 1131 software workshop

If the power consumption does not exceed 200 mA, the Controller Inside programmable card can be powered by Altivar 61 drives. Otherwise, an external 24 V ⎓ power supply must be used.
ATV61W●●●N4A24 drives incorporate a 24 V ⎓ power supply, allowing additional consumption of 250 mA.

The Controller Inside programmable card can also use:
- The drive I/O
- The I/O expansion card I/O
- The encoder interface card points counter
- The drive parameters (speed, current, torque, etc.)

Description

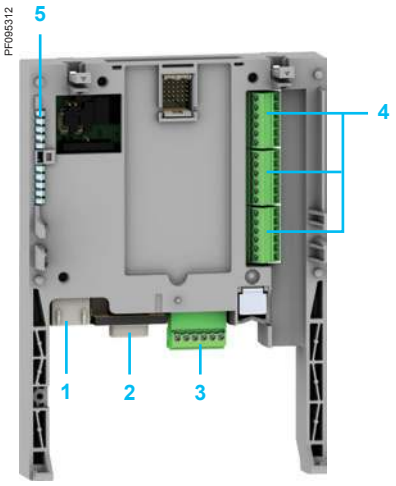

1 RJ45 connector for connecting the PS1131 software workshop via an RS 485 serial link
Connection to the PC is via a cable and RS 232/RS 485 converter included in the PC serial port connection kit, VW3 A8 106.

2 9-way male SUB-D connector for connection to the CANopen machine bus

3 Connector with removable screw terminals, 6 contacts at intervals of 3.81 for the 24 V ⎓ power supply and 4 logic inputs

4 3 connectors with removable screw terminals, 6 contacts at intervals of 3.81 for 6 logic inputs, 6 logic outputs, 2 analog inputs, 2 analog outputs and 2 commons

5 5 LEDs:
- 1 to indicate the presence of the 24 V ⎓ power supply
- 1 to indicate a program execution fault
- 2 to indicate the CANopen machine bus communication status
- 1 controlled by the application program

Drive/option combinations:
pages 1/34 to 1/45

Variable speed drives

Altivar 61

Option: Controller Inside programmable card

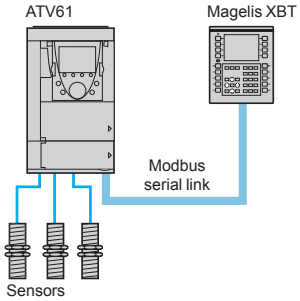

Independent machine with multiwire system

Dialogue

Human-machine dialogue with the application programmed in the Controller Inside programmable card is possible using:

■ The Altivar 61 graphic display terminal: the graphic terminal has a menu dedicated to the Controller Inside programmable card. This menu can be customized by the program depending on the application.

■ A Magelis industrial HMI terminal, connected to:

- The drive's Modbus port
- The Modbus TCP network, if the drive is equipped with a Modbus TCP communication card

Any industrial HMI terminal which supports the Modbus protocol can be used to display and modify the Controller Inside programmable card parameters.

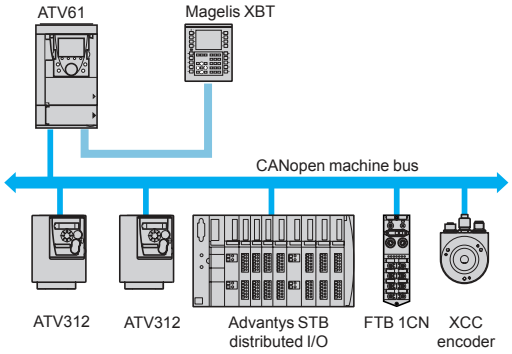

Independent machine with CANopen bus

Master CANopen communication

The master CANopen port on the Controller Inside programmable card can be used to extend the I/O capacity and to control other CANopen slave devices.

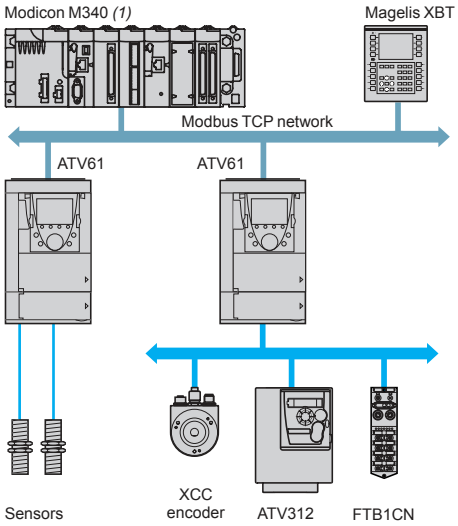

Modular machine with Modbus TCP network

Communication with a PLC

An Altivar 61 drive equipped with a Controller Inside programmable card integrates easily into complex architectures.

Regardless of which bus, network or serial link is being used (Modbus TCP, Modbus/Uni-Telway, PROFIBUS DP, InterBus, etc.), the PLC can communicate with the Controller Inside programmable card and the drive.

The periodic variables can still be configured as required.

Clock

A clock backed up by a lithium battery makes it possible to keep a log of events.

When the Controller Inside programmable card is installed in the drive, drive faults are automatically time and date-stamped without any special programming.

(1) Please refer to the "Modicon M340 Automation Platform" catalogue.

Drive/option combinations:
pages 1/34 to 1/45

1

PS 1131 software workshop

The PS 1131 software workshop conforms to international standard IEC/EN 61131-3 and includes all the functions for programming and setting up the Controller Inside programmable card.
It includes the CANopen configurator.

It is designed for Microsoft Windows® 98, Microsoft Windows® NT 4.0, Microsoft Windows® Millennium, Microsoft Windows® 2000 Professional and Microsoft Windows® XP operating systems.
It benefits from the user-friendly interface associated with these operating systems:
- Pop-up menus
- Function blocks
- Online help

The PS 1131 software workshop is available in both English and German.

The programming and debugging tools can be accessed via the application browser. This provides the user with an overview of the program and quick access to all the application components:
- Program editor
- Function blocks editor
- Variables editor
- Animation tables editor
- Runtime screens editor

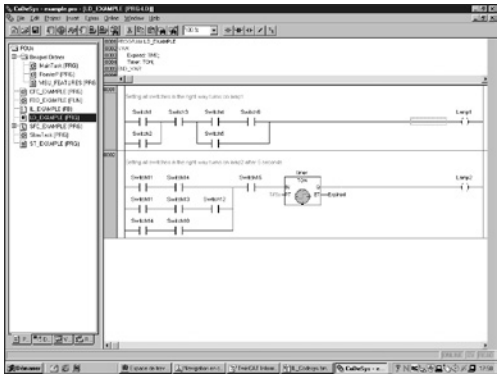

Ladder language programming example

Modular structured programming

The PS 1131 software workshop is used to structure an application into function modules consisting of sections (program code), animation tables and runtime screens.
Each program section has a name and is programmed in one of six available languages:
- Ladder Diagram (LD)
- Structured Text (ST)
- Grafcet (SFC)
- Instruction List (IL)
- Function Block Diagram (FBD)
- Continuous Flow Chart (CFC)

To protect know-how or prevent any accidental modification, each section can be write-protected or read/write-protected.

Function blocks

The PS 1131 software workshop features pre-programmed function blocks which make up the standard library.
Exchanges with the drive are performed by a function block available in the standard library.

The software workshop also offers users the option of creating their own function blocks and thus creating a user library.
The user library is also a means of protecting the know-how contained in the algorithms, as it is possible to lock access to the user function blocks program.

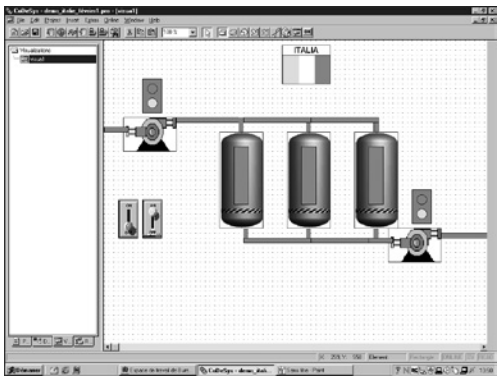

Example runtime screen

Debugging tools

The PS 1131 software workshop offers a complete set of tools for debugging the application:
- Program execution for debugging (step-by-step execution, execution of a single cycle, etc.)
- Realtime animation of the program with automatic display of the variables
- Animation tables editor with the option of saving them
- Oscilloscope (monitoring up to 20 variables)
- Application runtime screens editor (graphic objects, messages, screen backgrounds, etc.)
- Simulation function for testing the program without using the drive

Drive/option combinations:
pages 1/34 to 1/45

Variable speed drives

Altivar 61

Option: Controller Inside programmable card

537199

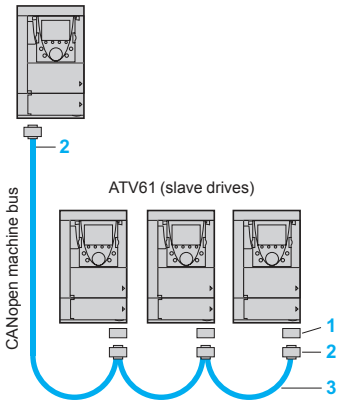

Master/slave application

PF121625

VW3CANA71

PF105504

TSXCANKCDF180T

References

Card

Description	Reference	Weight kg
Controller Inside programmable card equipped with one 9-way male SUB-D connector	**VW3A3501**	0.320

Connection accessories

Description	Item no.	Length m		Weight kg
CANopen adaptor for mounting on the RJ45 socket in the drive control terminals. The adaptor provides a 9-way male SUB-D connector conforming to the CANopen standard (CIA DRP 303-1)	1	–	**VW3CANA71**	–
CANopen connector 9-way female SUB-D with line terminator (can be disabled)	2	–	**TSXCANKCDF180T**	–

Cables

CANopen cables Standard cable, CE marking. Low smoke zero halogen. Flame retardant (IEC 60332-1).	3	50	**TSXCANCA50**	4.930
		100	**TSXCANCA100**	8.800
		300	**TSXCANCA300**	24.560
CANopen cables UL certified, CE marking. Flame retardant (IEC 60332-2).	3	50	**TSXCANCB50**	3.580
		100	**TSXCANCB100**	7.840
		300	**TSXCANCB300**	21.870
CANopen cables Cable for harsh environments *(1)* or mobile installations, CE marking. Low smoke zero halogen. Flame retardant (IEC 60332-1).	3	50	**TSXCANCD50**	3.510
		100	**TSXCANCD100**	7.770
		300	**TSXCANCD300**	21.700

PS 1131 software workshop

Description	Reference	Weight kg
PS 1131 software workshop supplied on CD-ROM	*(2)*	–
PC serial port connection kit including various accessories such as: ■ One 3 m cable with two RJ45 connectors ■ One RS 232/RS 485 converter with one 9-way female SUB-D connector and one RJ45 connector	**VW3A8106**	0.350

(1) Harsh environments:
- Resistance to hydrocarbons, industrial oils, detergents, solder splashes
- Relative humidity up to 100%
- Saline atmosphere
- Significant temperature variations
- Operating temperature between - 10°C and + 70°C

(2) The product reference is provided during the Controller Inside programmable card training course. Consult your Customer Care Centre.

Drive/option combinations:
pages 1/34 to 1/45

1

537201

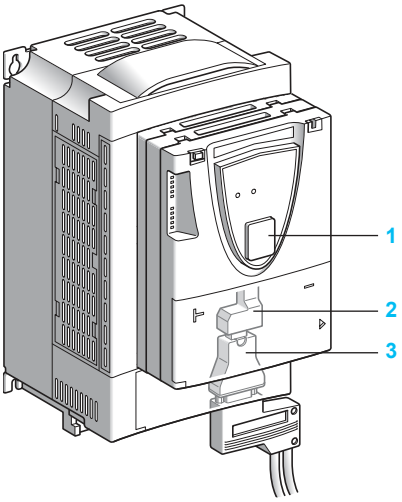

Integrated communication for Modbus and CANopen protocols

600267

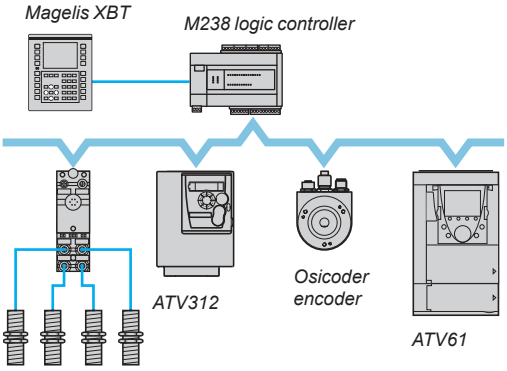

Sensors

Example configuration on CANopen machine bus

Presentation

The Altivar 61 drive has been designed to meet all the configuration requirements encountered within the context of networked industrial installations.

Integrated communication protocols

It includes Modbus and CANopen communication protocols as standard.

Two integrated communication ports enable direct access to the Modbus protocol:
■ One RJ45 Modbus terminal port 1 located on the drive front panel, which is used to connect a Human Machine Interface or one of the following configuration tools:
□ Remote graphic display terminal
□ Magelis industrial HMI terminal
□ SoMove setup software
□ Simple Loader and Multi-Loader configuration tools

■ One RJ45 Modbus network port 2 located on the drive's control terminals
This is assigned to control and signalling by a PLC or by another type of controller. It can also be used to connect a terminal or the SoMove setup software.

The CANopen protocol can be accessed from the Modbus network port 2 via the CANopen adaptor 3. In this case, terminal port 1 must be used to access the Modbus protocol.

The characteristics of the communication ports for Modbus and CANopen protocols are available on our website www.schneider-electric.com.

Optional communication cards

By adding one of the communication cards available as options, the Altivar 61 drive can also be connected to other communication networks and buses used in various application areas, such as industry and building management (HVAC) *(1)*.

Communication cards for industrial applications:
■ Modbus TCP Daisy Chain
■ Modbus/Uni-Telway (this card provides access to additional functions, which complement those of the integrated ports (Modbus ASCII and 4-wire RS 485))
■ Ethernet/IP
■ DeviceNet
■ PROFIBUS DP V0 and V1
■ InterBus
■ CC-Link
■ Ethernet POWERLINK

Communication cards for building applications (HVAC):
■ LonWorks
■ METASYS N2
■ APOGEE FLN
■ BACnet

The option of powering the control part separately enables communication to be maintained (monitoring, diagnostics) even if there is no power supply to the power part.

The main communication functions of Altivar 38 drives are compatible with the Altivar 61 drive *(2)*:
■ Connection
■ Communication services
■ Drive behaviour (profile)
■ Control and monitoring parameters
■ Standard adjustment parameters

(1) Heating, Ventilation and Air Conditioning.
(2) Please refer to the ATV38/ATV61 Substitution Guide supplied on the documentation CD-ROM.

Drive/option combinations:
pages 1/34 to 1/45

Functions

All drive functions can be accessed via the network:
- Configuration
- Adjustment
- Control
- Monitoring

The Altivar 61 drive's advanced functions provide excellent interfacing flexibility. They enable the different control sources (I/O, communication networks, communication cards and HMI terminal) to be assigned to control functions that satisfy the requirements of numerous, extremely complex applications.
Network configuration is simplified through the provision of configuration software (configurator for SyCon® networks, etc.).

For the integrated Modbus and CANopen ports and for communication cards for industrial applications, the Altivar 61 drive can be controlled:
- According to the CiA 402 profile
- According to the I/O profile where control is as simple and adaptable as control via the I/O terminals

The DeviceNet card also supports CIP AC Drive and Allen-Bradley drive profiles; PROFIBUS DP V0 and V1 cards also support the PROFIdrive profile.

Communication is monitored according to the specific criteria for each protocol. However, regardless of the protocol, it is possible to configure the drive reaction to a communication fault:
- Freewheel stop, stop on ramp, fast stop or braked stop
- Maintain last command received
- Fallback position at a predefined speed
- Ignore the fault

A command from the CANopen machine bus is processed with the same priority as one of the drive terminal inputs. This results in excellent response times on the network port via the CANopen adaptor.

Drive/option combinations:
pages 1/34 to 1/45

Variable speed drives
Altivar 61
Communication buses and networks

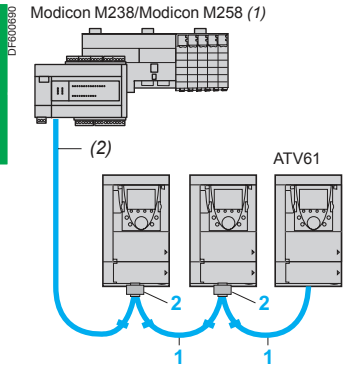

Optimized solution for daisy chain connection to the CANopen machine bus

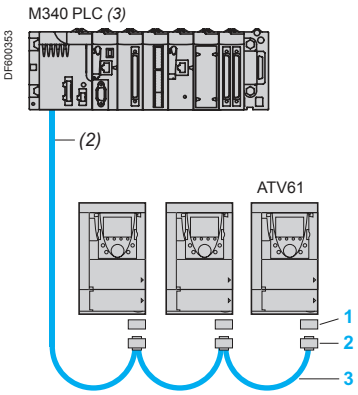

Example CANopen diagram with SUB-D connector

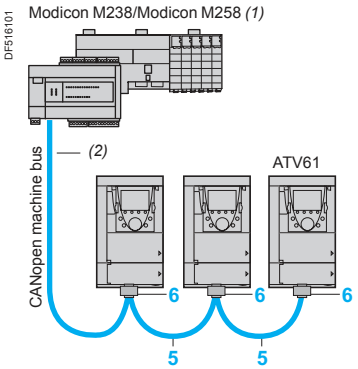

Example CANopen diagram with daisy chain tap

CANopen machine bus

Description	Item no.	Length m	Reference	Weight kg
Connection via RJ45 connector (optimized solution for daisy chain connection to the CANopen machine bus)				
CANopen cordsets equipped with 2 RJ45 connectors	1	0.3	**VW3CANCARR03**	0.050
		1	**VW3CANCARR1**	0.500
Daisy chain tap equipped with: ■ 2 RJ45 connectors for connecting the CANopen bus in a daisy chain ■ 1 cordset equipped with an RJ45 connector for connecting the drive	2	0.3	**TCSCTN023F13M03**	–
Connection via SUB-D connector				
CANopen adaptor for mounting on the RJ45 port on the drive control terminals. The adaptor provides a 9-way male SUB-D connector conforming to the CANopen standard (CIA DRP 303-1).	3	–	**VW3CANA71**	–
CANopen connector *(4)* 9-way female SUB-D with line terminator (can be disabled). 180° cable outlet for 2 CANopen cables. CAN-H, CAN-L, CAN-GND connection.	4	–	**VW3CANKCDF180T**	–
CANopen cables *(1) (2)* Standard cable, CE marking Low smoke zero halogen Flame retardant (IEC 60332-1)	5	50	**TSXCANCA50**	4.930
		100	**TSXCANCA100**	8.800
		300	**TSXCANCA300**	24.560
CANopen cables *(1) (2)* UL certified, CE marking Flame retardant (IEC 60332-2)	5	50	**TSXCANCB50**	3.580
		100	**TSXCANCB100**	7.840
		300	**TSXCANCB300**	21.870
CANopen cables *(1) (2)* Cable for harsh environments *(5)* or mobile installations, CE marking Low smoke zero halogen Flame retardant (IEC 60332-1)	5	50	**TSXCANCD50**	3.510
		100	**TSXCANCD100**	7.770
		300	**TSXCANCD300**	21.700
Connection via terminals				
Daisy chain tap equipped with: ■ 2 spring terminal blocks for connecting the CANopen bus in a daisy chain ■ 1 cordset equipped with an RJ45 connector for connecting the drive	6	0.6	**TCSCTN026M16M**	–

(1) Please refer to the "Modicon M238 Logic Controller" and "M258 Logic Controller" catalogues.
(2) Cable dependent on the type of controller or PLC.
(3) Please refer to the "Modicon M340 Automation Platform" catalogue.
(4) For ATV61H●●●M3, ATV61HD11M3X, HD15M3X, ATV61H075N4…HD18N4 and ATV61H●●●Y drives, this connector can be replaced by the TSXCANKCDF180T connector.
(5) Harsh environments:
- Resistance to hydrocarbons, industrial oils, detergents, solder splashes
- Relative humidity up to 100%
- Saline atmosphere
- Significant temperature variations
- Operating temperature between - 10°C and + 70°C.

Drive/option combinations:
pages 1/34 to 1/45

Variable speed drives

Altivar 61

Communication buses and networks

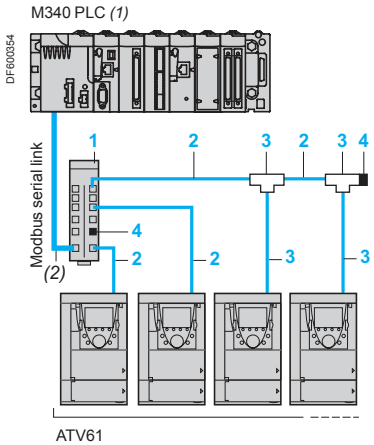

Example Modbus diagram with connection via splitter box and RJ45 connectors

Modbus serial link

Connection accessories

Description		Item no.	Length m	Unit reference	Weight kg
Modbus splitter box 10 RJ45 connectors and 1 screw terminal block		1	–	**LU9GC3**	0.500
Cordsets for Modbus serial link equipped with 2 RJ45 connectors		2	0.3	**VW3A8306R03**	0.025
			1	**VW3A8306R10**	0.060
			3	**VW3A8306R30**	0.130
Modbus T-junction boxes (with integrated cable)		3	0.3	**VW3A8306TF03**	0.190
			1	**VW3A8306TF10**	0.210
Line terminators for RJ45 connector *(3)*	R = 120 Ω C = 1 nf	4	–	**VW3A8306RC**	0.010
	R = 150 Ω	4	–	**VW3A8306R**	0.010

1) Please refer to the "Modicon M340 Automation platform" catalogue.
(2) Cable depending on the type of controller or PLC.
(3) Order in lots of 2.

Drive/option combinations:
pages 1/34 to 1/45

1

Communication card

Modbus TCP Daisy Chain and EtherNet/IP network *(1) (2)*

Description		Length m	Reference	Weight kg
Communication cards				
Modbus TCP Daisy Chain	Equipped with 2 RJ45 connectors Modbus TCP 10/100 Mbps class C20	–	**VW3A3310D**	0.300
EtherNet/IP	Equipped with 2 RJ45 connectors	–	**VW3A3316**	0.300
EtherNet/IP (RSTP)	Equipped with 2 RJ45 connectors	–	**VW3A3320** *(3)*	0.300
ConneXium Modbus TCP (VW3A3310D) or EtherNet/IP (VW3A3316 and VW3A3320) cordsets				
Straight shielded twisted pair cordsets	Equipped with 2 RJ45 connectors To be connected on a hub or on a switch	2	**490NTW00002**	–
		5	**490NTW00005**	–
		12	**490NTW00012**	–
		40	**490NTW00040**	–
		80	**490NTW00080**	–

DeviceNet bus *(1) (2)*

Description		Reference	Weight kg
Communication card			
DeviceNet	Equipped with a 5-way removable screw terminal block	**VW3A3309**	0.300

InterBus bus *(1) (2)*

Description		Reference	Weight kg
Communication card			
InterBus	Equipped with one 9-way male SUB-D connector and one 9-way female SUB-D connector To be connected using cordset 170MCI●●●00 *(4)*	**VW3A3304**	0.300

CC-Link bus *(1) (2)*

Description		Reference	Weight kg
Communication card			
CC-Link	Equipped with a 5-way removable screw terminal block	**VW3A3317**	0.300

Modbus/Uni-Telway network *(1) (2)*

Description		Length m	Reference	Weight kg
Communication card				
Modbus/Uni-Telway	Equipped with a 9-way female SUB-D connector	–	**VW3A3303**	0.300
Connection accessories for Modbus/Uni-Telway card (VW3A3303)				
Subscriber socket	Equipped with two 15-way female SUB-D connectors and two screw terminal blocks. For 2-channel junction box, trunk cable extension and line terminator	–	**TSXSCA62**	0.570
Cordset for TSXSCA62 subscriber socket	Equipped with two 9 and 15-way male SUB-D connectors	3	**VW3A83062**	0.150

(1) The Altivar 61 drive can only take one communication card. See the summary tables of possible drive, option and accessory combinations on pages 1/34 to 1/45.
(2) User manuals can be downloaded from our website www.schneider-electric.com. For the DeviceNet card, the description files in gsd, eds or xif format can also be downloaded from our website www.schneider-electric.com..
(3) For a v5.8ie36#6 and above software version.
(4) Please refer to the "Automation Platform Modicon Premium and Unity - PL7 Software" catalogue

Drive/option combinations:
pages 1/34 to 1/45

Variable speed drives
Altivar 61
Communication buses and networks

PROFIBUS DP V0/V1 (1) (2)

Description		Length m	Reference	Weight kg
Communication cards				
PROFIBUS DP V0	Equipped with a 9-way female SUB-D connector	–	**VW3A3307**	0.300
PROFIBUS DP V1	Equipped with a 9-way female SUB-D connector	–	**VW3A3307S371**	0.300
Connection accessories for PROFIBUS DP V0 (VW3A3307) or V1 (VW3A3307S371) card				
Connectors: 9-way male SUB-D (3)	For middle of line	–	**490NAD91104**	–
	For end of line	–	**490NAD91103**	–
Cable for 490NAD911●● connector (3)		100	**TSXPBSCA100**	–
		400	**TSXPBSCA100**	–

LonWorks bus (1) (2)

Description		Reference	Weight kg
Communication card			
LonWorks	Equipped with a 3-way removable screw terminal block	**VW3A3312**	0.300

METASYS N2 bus (1) (2)

Communication card			
METASYS N2	Equipped with a 4-way removable screw terminal block	**VW3A3318**	0.300

APOGEE FLN bus (1) (2)

Communication card			
APOGEE FLN	Equipped with a 4-way removable screw terminal block	**VW3A3314**	0.300

BACnet bus (1) (2)

Communication card			
BACnet	Equipped with a 4-way removable screw terminal block	**VW3A3319**	0.300

Profinet bus (1) (2)

Description		Length m	Reference	Weight kg
Communication card				
Profinet	Equipped with 2 RJ45 connectors	–	**VW3A3327** (4)	0.290

EtherCAT bus (1) (2)

Description		Length m	Reference	Weight kg
Communication card				
EtherCAT bus	Equipped with 2 RJ45 connectors	–	**VW3A3326** (4)	0.270

Ethernet POWERLINK (1) (2)

Description		Length m	Reference	Weight kg
Communication card				
POWERLINK	Equipped with 2 RJ45 connectors	–	**VW3A3321**	0.350

(1) The Altivar 61 drive can only take one communication card. See the summary tables of possible drive, option and accessory combinations on pages 1/34 to 1/45.
(2) User manuals can be downloaded from our website www.schneider-electric.com.
For the PROFIBUS DP and LonWorks cards, the description files in gsd, eds or xif format can also be downloaded from our website www.schneider-electric.com.
(3) Please refer to the "Automation Platform Modicon Premium and Unity - PL7 Software" catalogue.
(4) For a v5.8ie36#6 and above software version.

Drive/option combinations:
pages 1/34 to 1/45

Variable speed drives

Altivar 61

Option: resistance braking units

Presentation

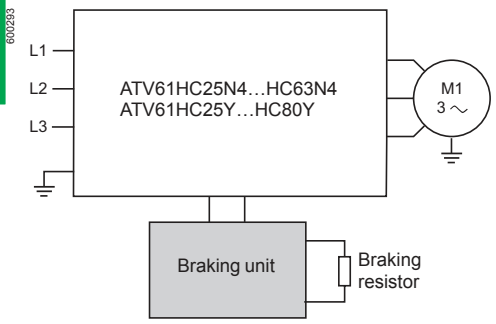

Resistance braking allows Altivar 61 drives to operate while braking to a standstill or during “generator” operation, by dissipating the energy in the braking resistor.

ATV61H●●●M3, ATV61H●●●M3X, ATV61H075N4…HC22N4, ATV61W●●●N4, ATV61W●●●N4C, ATV61H●●●S6X and ATV61HU30Y…HC20Y drives have a built-in dynamic brake transistor.

For ATV61HC25N4…HC63N4 and ATV61HC25Y…HC80Y drives, a braking unit must be used. This is controlled by the drive:

- For ATV61HC25N4 and HC31N4 drives, the braking unit is mounted directly on the left-hand side of the drive
- For ATV61HC40N4...HC63N4 and ATV61HC25Y…HC80Y drives, the braking unit is an external module

Braking units provide IP 20 protection. Thermal protection is provided by an integrated temperature probe.

Application

High-inertia machines.

References

For drives	Power		Losses	Cable (drive-braking unit)		Cable (braking unit-esistors)		Percentage of conduction time	Reference	Weight
	Conti-nuous	Maximum	At continuous power	Cross-section	Maximum length	Cross-section	Maximum length			
	kW	kW	W	mm²	m	mm²	m	%		kg
Supply voltage: 380…480 V 50/60 Hz										
ATV61HC25N4, HC31N4 ATV61QC20N4… QC31N4	200	420	550	– Internal connections	–	2 x 95	50	5% at 420 kW 15% at 320 kW 50% at 250 kW	**VW3A7101**	30.000
ATV61HC40N4… HC63N4 ATV61QC40N4… QC63N4	400	750	1050	2 x 150	1	2 x 150	50	5% at 750 kW 15% at 550 kW 50% at 440 kW	**VW3A7102**	80.000
Supply voltage: 500…690 V 50/60 Hz										
ATV61HC25Y… HC40Y ATV61QC25Y… QC40Y	300	450	650		1		50	5% at 450 kW 15% at 400 kW 50% at 350 kW	**VW3A7103**	80.000
ATV61HC50Y… HC80Y ATV61QC50Y… QC80Y	400	900	1150		1		50	5% at 900 kW 15% at 600 kW 50% at 500 kW	**VW3A7104**	80.000

***Note**: To increase the braking power, several braking resistors can be mounted in parallel on the same braking unit. In this case, do not forget to take the minimum resistance value to be associated with the braking unit into account, that is:*

- *1.05 ohm for the VW3A7101 braking unit*
- *0.7 ohm for the VW3A7102 braking unit*
- *2 ohms for the VW3A7103 braking unit*
- *1 ohm for the VW3A7104 braking unit*

Variable speed drives: page 1/16
Drive/option combinations: page 1/34

Schneider Electric

Variable speed drives

Altivar 61

Option: braking resistors

Presentation

PF105659

VW3A7701

Braking resistors allow Altivar 61 drives to operate while braking to a standstill, by dissipating the braking energy.
They enable maximum transient braking torque.

Braking resistors are designed to be mounted on the outside of the enclosure, but should not inhibit natural cooling. Air inlets and outlets must not be obstructed in any way. The air must be free of dust, corrosive gas and condensation.

Two resistor models are available, depending on the drive rating:
- With IP 20 casing and thermal protection provided by temperature-controlled switch or by the drive (VW3A7701…709)
- With IP 23 casing and thermal protection provided by thermal overload relay (VW3A771● and 8●●)

The internal circuits of Altivar 61 drives rated 200 kW or less have a built-in dynamic brake transistor.

Application

Inertia machines.

Braking resistors

For drives	Degree of protection of the resistor	Ohmic value at 20°C	Average power available at 50°C *(1)*	Reference	Weight
		Ω	kW		kg
Supply voltage: 200…240 V 50/60 Hz					
ATV61H075M3	IP 20	100	0.05	**VW3A7701**	1.900
ATV61HU15M3, HU22M3	IP 20	60	0.1	**VW3A7702**	2.400
ATV61HU30M3, HU40M3	IP 20	28	0.2	**VW3A7703**	3.500
ATV61HU55M3, HU75M3	IP 20	15	1	**VW3A7704**	11.000
ATV61HD11M3X	IP 20	10	1	**VW3A7705**	11.000
ATV61HD15M3X	IP 20	8	1	**VW3A7706**	11.000
ATV61HD18M3X, HD22M3X	IP 20	5	1.3	**VW3A7707**	11.000
ATV61HD30M3X	IP 20	4	1	**VW3A7708**	11.000
ATV61HD37M3X, HD45M3X	IP 20	2.5	1	**VW3A7709**	11.000
ATV61HD55M3X, HD75M3X	IP 23	1.8	15.3	**VW3A7713**	50.000
ATV61HD90M3X	IP 23	1.4	20.9	**VW3A7714**	63.000

(1) Load factor for resistors: the value of the average power that can be dissipated at 50°C from the resistor into the casing is determined for a load factor during braking that corresponds to the majority of normal applications:
For VW3A7701…709:
- 2 s braking with a 0.6 Tn braking torque for a 40 s cycle
- 0.8 s braking with a 1.5 Tn braking torque for a 40 s cycle
For VW3A7713 and 714:
- 10 s braking with a 2 Tn braking torque for a 30 s cycle

Variable speed drives: page 1/16
Drive/option combinations: page 1/34

Variable speed drives

Altivar 61

Option: braking resistors

PF105659

VW3A7701

Braking resistors (continued)

For drives	Degree of protection of the resistor	Ohmic value at 20°C	Average power available at 50°C *(1)*	Reference	Weight
		Ω	kW		kg
Supply voltage: 380…480 V 50/60 Hz					
ATV61H075N4…HU40N4 ATV61W075N4…WU55N4 ATV61W075N4C…WU55N4C	IP 20	100	0.05	**VW3A7701**	1.900
ATV61HU55N4, HU75N4 ATV61WU75N4, WD11N4 ATV61WU75N4C, WD11N4C	IP 20	60	0.1	**VW3A7702**	2.400
ATV61HD11N4, HD15N4 ATV61WD15N4, WD18N4 ATV61WD15N4C, WD18N4C	IP 20	28	0.2	**VW3A7703**	3.500
ATV61HD18N4…HD30N4 ATV61WD22N4…WD37N4 ATV61WD22N4C…WD37N4C	IP 20	15	1	**VW3A7704**	11.000
ATV61HD37N4 ATV61WD45N4 ATV61WD45N4C	IP 20	10	1	**VW3A7705**	11.000
ATV61WD55N4, WD90N4 ATV61WD55N4C, WD90N4C	IP 20	8	1	**VW3A7706**	11.000
ATV61HD45N4, HD75N4	IP 20	5	1.3	**VW3A7707**	11.000
ATV61HD90N4, HC11N4 ATV61QC11N4	IP 23	2.75	25	**VW3A7710**	80.000
ATV61HC13N4, HC16N4 ATV61QC13N4, QC16N4	IP 23	2.1	37	**VW3A7711**	86.000
ATV61HC22N4 ATV61QC20N4	IP 23	2.1	44	**VW3A7712**	104.000
ATV61HC25N4 ATV61QC25N4	IP 23	1.05	56	**VW3A7715**	136.000
ATV61HC31N4 ATV61QC31N4	IP 23	1.05	75	**VW3A7716**	172.000
ATV61HC40N4, HC50N4 ATV61QC40N4, QC50N4	IP 23	0.7	112	**VW3A7717**	266.000
ATV61HC63N4 ATV61QC63N4	IP 23	0.7	150	**VW3A7718**	350.000

(1) Load factor for resistors: the value of the average power that can be dissipated at 50°C from the resistor into the casing is determined for a load factor during braking that corresponds to the majority of normal applications:
For VW3A7701…707:
- 2 s braking with a 0.6 Tn braking torque for a 40 s cycle
- 0.8 s braking with a 1.5 Tn braking torque for a 40 s cycle
For VW3A7710…712 and 715…718:
- 10 s braking with a 2 Tn braking torque for a 30 s cycle

Variable speed drives: page 1/16
Drive/option combinations: page 1/34

Variable speed drives

Altivar 61

Option: braking resistors

Braking resistors (continued)

For drives	Degree of protection of the resistor	Ohmic value at 20°C	Average power available at 50°C (1)	Quantity required per drive	Reference	Weight
		Ω	kW			kg
Supply voltage: 500…600 V 50/60 Hz						
ATV61HU22S6X…HU75S6X	IP 20	60	0.1	1	**VW3A7702**	2.400
Supply voltage: 500…690 V 50/60 Hz						
ATV61HU30Y…HU75Y	IP 20	100	0.05	1	**VW3A7701**	1.900
ATV61HD11Y, HD15Y	IP 20	60	0.1	1	**VW3A7702**	2.400
ATV61HD18Y, HD22Y	IP 20	28	0.2	1	**VW3A7703**	3.500
ATV61HD30Y…HD45Y	IP 20	15	1	1	**VW3A7704**	11.000
ATV61HD55Y, HD75Y	IP 20	10	1	1	**VW3A7705**	11.000
ATV61HD90Y	IP 20	5	1.3	1	**VW3A7707**	11.000
ATV61HC11Y, HC13Y ATV61QC13Y	IP 23	4.2	62	1	**VW3A7806**	126.000
ATV61HC16Y, HC20Y ATV61QC16Y, QC20Y	IP 23	8.1	44	2	**VW3A7805** *(2)*	92.000
ATV61HC25Y ATV61QC25Y	IP 23	4.2	62	2	**VW3A7806** *(2)*	126.000
ATV61HC31Y ATV61QC31Y	IP 23	1.05	75	2	**VW3A7716** *(3)*	172.000
ATV61HC40Y ATV61QC40Y	IP 23	1.05	112	2	**VW3A7814** *(3)*	280.000
ATV61HC50Y ATV61QC50Y	IP 23	0.7	112	2	**VW3A7717** *(3)*	266.000
ATV61HC63Y ATV61QC63Y	IP 23	0.7	150	2	**VW3A7718** *(3)*	350.000
ATV61HC80Y ATV61QC80Y	IP 23	0.7	225	2	**VW3A7816** *(3)*	543.000

(1) Load factor for resistors: the value of the average power that can be dissipated at 50°C from the resistor into the casing is determined for a load factor during braking that corresponds to the majority of normal applications.
For VW3A7701…705 and 707:
- 2 s braking with a 0.6 Tn braking torque for a 40 s cycle
- 0.8 s braking with a 1.5 Tn braking torque for a 40 s cycle
For VW3A7716…718:
- 10 s braking with a 2 Tn braking torque for a 30 s cycle
For VW3A7805 and 806:
- 100 s braking with a 1 Tn braking torque for a 200 s cycle
- 20 s braking with a 1.6 Tn braking torque for a 200 s cycle
For VW3A7814 and 816:
- 10 s braking with a 2 Tn braking torque for a 240 s cycle
- 110 s braking with a 1.25 Tn braking torque for a 240 s cycle
(2) The two braking resistors must be connected in parallel. The dimensions of all the components must be taken into account as well as the required space of 300 mm to be left between each resistor (see our website www.schneider-electric.com).
(3) The two braking resistors must be connected in series. The dimensions of all the components must be taken into account as well as the required space of 300 mm to be left between each resistor (see our website www.schneider-electric.com).

Variable speed drives:
page 1/16

Drive/option combinations:
page 1/34

Variable speed drives

Altivar 61: reduction of current harmonics

Option: DC chokes

Depending on the line supply, the main solutions for reducing current harmonics are as follows:
- DC chokes *(1)* (see below)
- Line chokes *(1)* (see page 1/66)
- 16% and 10% passive filters *(1)* (see page 1/69)
- Use of passive filters with a DC choke (see pages 1/70 to 1/75).

These five solutions can be used on the same installation *(1)*.
It is always easier and less expensive to deal with current harmonics at installation level as a whole rather than at the level of each individual unit, particularly when using passive filters.

537327

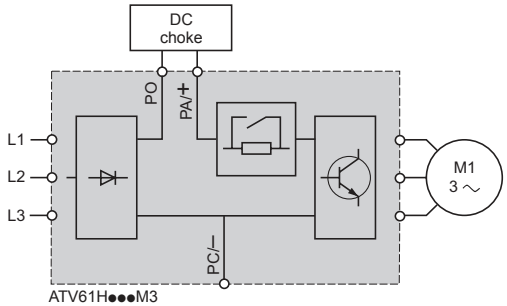

ATV61H●●●M3
ATV61H●●●M3X
ATV61H●●●N4

DC choke

DC chokes are used to reduce current harmonics in order to comply with standard IEC 61000-3-12 for drives in which the line current is more than 16 A and less than 75 A.

Using a DC choke with the drive complies with standard IEC 61000-3-12 provided that the RSCE ⩾ 120 at the point of connection to the public power supply.

It is the responsibility of the installer or the user to ensure that the device is connected correctly to a connection point with an RSCE ⩾ 120.
The DC choke is connected to the drive power terminals.

The DC choke is supplied as standard with ATV61HD55M3X…HD90M3X and ATV61HD90N4…HC63N4 drives, and integrated in ATV61W●●●N4 and ATV61W●●●N4C drives.

It provides IP 20 degree of protection.

Applications

Reduction of current harmonics.
Reduction of the THDI to 5% or 10% when used with passive filters (see pages 1/70 to 1/75).
Maintaining the motor torque in relation to the line inductance.

(1) For ATV61H●●●S6X and ATV61HU30Y…HD90Y drives, only line chokes are recommended. They are mandatory for ATV61HC11Y…HC80Y drives (see page 1/66).

Variable speed drives

Altivar 61: reduction of current harmonics

Option: DC chokes

References *(1)*

For drives	Inductance value	Nominal current	Losses	THDI *(2)*	Reference	Weight
	mH	A	W			kg
Three-phase supply voltage: 200…240 V 50/60 Hz						
ATV61H075M3	6.8	8	22.5	41.27	**VW3A4503**	1.700
ATV61HU15M3	3.2	14.3	32	42.4	**VW3A4505**	2.200
ATV61HU22M3	2.2	19.2	33	43.33	**VW3A4506**	2.500
ATV61HU30M3	1.6	27.4	43	43.22	**VW3A4507**	3.000
ATV61HU40M3	1.2	44	61	43.91	**VW3A4508**	4.300
ATV61HU55M3	1.2	44	61	38		
ATV61HU75M3	0.7	36	30.5	43.96	**VW3A4509**	2.500
ATV61HD11M3X	0.52	84.5	77	38.14	**VW3A4510**	6.400
ATV61HD15M3X	0.52	84.5	77	35		
ATV61HD18M3X	0.22	171.2	86	38.5	**VW3A4511**	17.850
ATV61HD22M3X	0.22	171.2	86	36.62		
ATV61HD30M3X	0.09	195	73	43.51	**VW3A4512**	10.000
ATV61HD37M3X	0.09	195	73	39.24		
ATV61HD45M3X	0.09	195	73	35.7		
Three-phase supply voltage: 380…480 V 50/60 Hz						
ATV61H075N4	18	2.25	7.7	44.95	**VW3A4501**	0.650
ATV61HU15N4	10	4.3	11	45.48	**VW3A4502**	1.000
ATV61HU22N4	6.8	8	22.5	45	**VW3A4503**	1.700
ATV61HU30N4	6.8	8	22.5	40.08		
ATV61HU40N4	3.9	10.7	27	44.72	**VW3A4504**	1.650
ATV61HU55N4	3.2	14.3	32	45.19	**VW3A4505**	2.200
ATV61HU75N4	2.2	19.2	33	42.25	**VW3A4506**	2.500
ATV61HD11N4	1.6	27.4	43	43.1	**VW3A4507**	3.000
ATV61HD15N4	1.2	44	57.5	43.06	**VW3A4508**	4.300
ATV61HD18N4	1.2	44	57.5	35.23		
ATV61HD22N4	0.52	84.5	98.3	40.4	**VW3A4510**	6.400
ATV61HD30N4	0.52	84.5	98.3	36.99		
ATV61HD37N4	0.52	84.5	98.3	35.13		
ATV61HD45N4	0.22	171.2	128	45.59	**VW3A4511**	17.850
ATV61HD55N4	0.22	171.2	128	39.29		
ATV61HD75N4	0.22	171.2	128	36.2		

(1) The DC choke is supplied as standard with ATV61HD55M3X…HD90M3X and ATV61HD90N4…HC63N4 drives.
It is integrated in ATV61W●●●N4 and ATV61W●●●N4C drives.

(2) Total current harmonic distortion in accordance with IEC 61000-3-12.

Variable speed drives: page 1/16

Drive/option combinations: page 1/34

Variable speed drives

Altivar 61: reduction of current harmonics

Option: line chokes

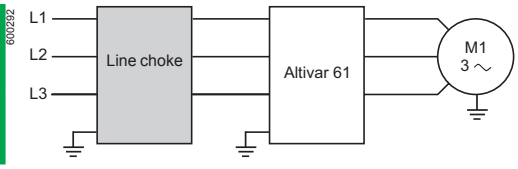

Line chokes

Line chokes are used to provide improved protection against overvoltages on the line supply and to reduce harmonic distortion of the current produced by the drive.

The recommended chokes limit the line current.
They have been developed in line with standard IEC 61800-5-1 (VDE 0160 level 1 high-energy overvoltages on the line supply).

The choke values are defined for a phase-to-phase voltage drop of between 3% and 5% of the nominal supply voltage. Values higher than this will cause loss of torque.

Line chokes are mandatory for:
- ATV61HU40M3…HU75M3 drives powered by a 200…240 V 50/60 Hz single-phase supply voltage
- ATV61HD90N4D...HC63N4D and ATV61QC●●N4 drives powered by a 380…480 V 50/60 Hz three-phase supply voltage
- ATV61HC11Y…HC80Y drives
- ATV61QC13Y…QC80Y drives

Their use is recommended for ATV61H●●●S6X and ATV61HU30Y…HD90Y drives.

They can also be used with:
- ATV61H●●●M3 drives powered by a 200…240 V 50/60 Hz three-phase voltage, ATV61H●●●M3X and ATV61●●●●N4 drives
- ATV61●●●Y drives in order to reach a total current distortion factor complying with standard IEC 61000-3-12

***Note**: ATV61HD90N4…HC63N4 drives, supplied as standard with a DC choke, can be ordered without a choke by adding the letter D at the end of the reference (see page 1/23).*

Chokes must be installed upstream of the drive.

Applications

The use of line chokes is recommended in particular under the following circumstances:
- Close connection of several drives in parallel
- Line supply with significant disturbance from other equipment (interference, overvoltages)
- Line supply with voltage imbalance between phases that is more than 1.8% of the nominal voltage
- Drive supplied by a line with very low impedance (in the vicinity of power transformers 10 times more powerful than the drive rating)
- Installation of a large number of frequency inverters on the same line
- Reduction of overloads on the cos φ correction capacitors, if the installation includes a power factor correction unit

Variable speed drives

Altivar 61: reduction of current harmonics

Option: line chokes

References

For drives	Line supply Isc	Line choke				Quantity required per drive	Reference	Weight
		Inductance value	Nominal current	Saturation current	Losses			
	kA	mH	A	A	W			kg
Single-phase supply voltage: 200…240 V 50/60 Hz								
ATV61HU40M3 *(1)*	5	2	25	–	45	1	**VW3A58501**	3.500
ATV61HU55M3 *(1)*	5	1	45	–	50	1	**VW3A58502**	3.500
ATV61HU75M3 *(1)*	22	1	45	–	50	1	**VW3A58502**	3.500
Three-phase supply voltage: 200…240 V 50/60 Hz								
ATV61H075M3	5	10	4	–	45	1	**VW3A4551**	1.500
ATV61HU15M3, HU22M3	5	4	10	–	65	1	**VW3A4552**	3.000
ATV61HU30M3	5	2	17	–	75	1	**VW3A4553**	3.500
ATV61HU40M3	5	1	31	–	90	1	**VW3A4554**	6.000
ATV61HU55M3	22	1	31	–	90	1	**VW3A4554**	6.000
ATV61HU75M3, HD11M3X	22	0.5	60	–	94	1	**VW3A4555**	11.000
ATV61HD15M3X	22	0.3	107	–	260	1	**VW3A4556**	16.000
ATV61HD18M3X…HD45M3X	22	0.15	230	–	400	1	**VW3A4557**	45.000
ATV61HD55M3X	35	0.12	222	346	278	1	**VW3A4559**	35.000
ATV61HD75M3X	35	0.085	300	474	315	1	**VW3A4568**	46.000
ATV61HD90M3X	35	0.06	450	574	335	1	**VW3A4569**	70.000
Three-phase supply voltage: 380…480 V 50/60 Hz								
ATV61H075N4, HU15N4 ATV61W075N4, WU15N4 ATV61W075N4C, WU15N4C	5	10	4	–	45	1	**VW3A4551**	1.500
ATV61HU22N4…HU40N4 ATV61WU22N4…WU40N4 ATV61WU22N4C…WU40N4C	5	4	10	–	65	1	**VW3A4552**	3.000
ATV61HU55N4, HU75N4 ATV61WU55N4, WU75N4 ATV61WU55N4C, WU75N4C	22	2	17	–	75	1	**VW3A4553**	3.500
ATV61HD11N4, HD15N4 ATV61WD11N4, WD15N4 ATV61WD11N4C, WD15N4C	22	1	31	–	90	1	**VW3A4554**	6.000
ATV61HD18N4, HD22N4 ATV61WD18N4, WD22N4 ATV61WD18N4C, WD22N4C	22	0.5	60	–	94	1	**VW3A4555**	11.000
ATV61HD30N4…HD55N4 ATV61WD30N4…WD55N4 ATV61WD30N4C…WD55N4C	22	0.3	107	–	260	1	**VW3A4556**	16.000
ATV61HD75N4 ATV61WD75N4 ATV61WD75N4C	22	0.15	230	–	400	1	**VW3A4557**	45.000
ATV61HD90N4D *(1)* ATV61WD90N4 ATV61WD90N4C	35	0.155	184	370	220	1	**VW3A4558**	31.000
ATV61HC11N4D *(1)* ATV61QC11N4 *(1)*	35	0.12	222	445	278	1	**VW3A4559**	35.000
ATV61HC13N4D *(1)* ATV61QC13N4 *(1)*	35	0.098	264	530	245	1	**VW3A4560**	43.000
ATV61HC16N4D *(1)* ATV61QC16N4 *(1)*	50	0.085	300	570	315	1	**VW3A4568**	46.000
ATV61HC22N4D *(1)* ATV61QC20N4 *(1)*	50	0.066	344	685	258	1	**VW3A4561**	47.000
ATV61HC22N4D *(1)* ATV61HC25N4D*(1)* ATV61QC25N4 *(1)*	50	0.06	450	850	335	1	**VW3A4569**	70.000
ATV61HC31N4D *(1)* ATV61QC31N4 *(1)*	50	0.038	613	1150	307	1	**VW3A4564**	73.000
ATV61HC40N4D *(1)*	50	0.032	720	1352	428	1	**VW3A4565**	82.000
ATV61QC40N4 *(1)*	50	0.066	344	685	258	2	**VW3A4561**	47.000
ATV61HC50N4D *(1)*	50	0.06	450	850	335	2	**VW3A4569**	70.000
ATV61QC50N4 *(1)*	50	0.038	509	855	278	2	**VW3A4563**	59.000
ATV61HC63N4D *(1)*	50	0.038	613	1150	307	2	**VW3A4564**	73.000
ATV61QC63N4 *(1)*	50	0.026	590	1180	320	2	**VW3A4573**	60.000

(1) Use of a line choke is mandatory (see table of combinations on page 1/36).

Variable speed drives

Altivar 61: reduction of current harmonics

Option: line chokes

PH10752

VW3A4572

References (continued)

For drives	Line supply Isc	Line choke				Quantity required per drive	THDI (1)	Reference	Weight
		Inductance value	Nominal current	Saturation current	Losses				
	kA	mH	A	A	W				kg
Three-phase supply voltage: 500…600 V 50/60 Hz									
ATV61HU22S6X *(2)*	22	10	4	–	45	1	39.6	**VW3A4551**	1.500
ATV61HU30S6X, HU40S6X *(2)*	22	4	10	–	65	1	48.1	**VW3A4552**	3.000
ATV61HU55S6X *(2)*	22	4	10	–	65	1	41.6	**VW3A4552**	3.000
ATV61HU75S6X *(2)*	22	2	17	–	75	1	52.3	**VW3A4553**	3.500
Three-phase supply voltage: 500…690 V 50/60 Hz									
ATV61HU30Y *(2)*	22	10	4	–	45	1	38.03	**VW3A4551**	1.500
ATV61HU40Y *(2)*	22	4	10	–	65	2	36.95	**VW3A4552**	3.000
ATV61HU55Y *(2)*	22	4	10	–	65	1	47.09		
ATV61HU75Y *(2)*	22	4	10	–	65	1	37.36		
ATV61HD11Y *(2)*	22	2	17	–	75	1	41.81	**VW3A4553**	3.500
ATV61HD15Y *(2)*	22	2	17	–	75	1	35.75		
ATV61HD18Y *(2)*	22	1	31	–	90	1	38.44	**VW3A4554**	6.000
ATV61HD22Y *(2)*	22	1	31	–	90	1	35.31		
ATV61HD30Y *(2)*	22	0.5	60	–	94	1	37.61	**VW3A4555**	11.000
ATV61HD37Y *(2)*	22	0.5	60	–	94	1	39.39		
ATV61HD45Y *(2)*	22	0.5	60	–	94	1	36.07		
ATV61HD55Y *(2)*	22	0.3	107	–	260	1	37.38	**VW3A4556**	16.000
ATV61HD75Y *(2)*	22	0.3	107	–	260	1	37.39		
ATV61HD90Y *(2)*	22	0.3	107	–	260	1	33.24		
ATV61HC11Y *(3)*	28	0.22	160	320	220	1	43.31	**VW3A4570**	28.000
ATV61HC13Y *(3)* ATV61QC13Y	28	0.22	160	320	220	1	39.73	**VW3A4570**	28.000
ATV61HC16Y *(3)* ATV61QC16Y *(3)*	28	0.23	230	405	330	1	36.5	**VW3A4571**	79.000
ATV61HC20Y *(3)* ATV61QC20Y *(3)*	35	0.23	230	405	330	1	47.13	**VW3A4571**	79.000
ATV61HC25Y *(3)* ATV61QC25Y *(3)*	35	0.098	264	530	245	1	41.91	**VW3A4560**	35.000
ATV61HC31Y *(3)* ATV61QC31Y *(3)*	35	0.1	450	770	495	1	37.61	**VW3A4572**	90.000
ATV61HC40Y *(3)* ATV61QC40Y *(3)*	35	0.1	450	770	495	1	44.78		
ATV61HC50Y *(3)* ATV61QC50Y *(3)*	35	0.085	300	570	315	2	38.08	**VW3A4568**	46.000
ATV61HC63Y *(3)* ATV61QC63Y *(3)*	35	0.1	450	770	495	2	35.42	**VW3A4572**	90.000
ATV61HC80Y *(3)* ATV61QC80Y *(3)*	42	0.1	450	770	495	2	32.04	**VW3A4572**	90.000

(1) Total current harmonic distortion in accordance with IEC 61000-3-12. The values are given for a 600 V 60 Hz three-phase supply voltage.

(2) Use of a line choke is recommended.

(3) Use of a line choke is mandatory.

Variable speed drives

Altivar 61: reduction of current harmonics

Option: passive filters

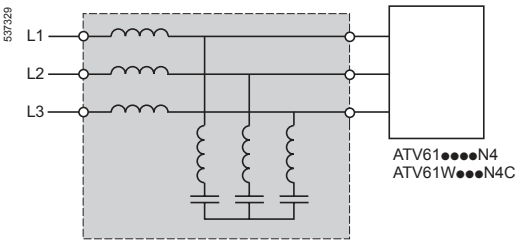

Passive filter

Passive filters

Passive filters are used to reduce current harmonics with total harmonic distortion factors (THDI) of less than 16%, 10% or 5%.
In some cases, several passive filters (2 to 3) can be used on the same drive.

These performance levels can be improved and the harmonic distortion reduced to less than 10% or 5% if a DC choke is used with a 16% or 10% passive filter. See pages 1/64 to 1/65.

The reactive power increases at no load or low load. To eliminate this reactive power, the filter capacitors can be disconnected via the drive (see the diagrams on our website www.schneider-electric.com or refer to the Programming Manual).

The passive filters provide IP 20 protection.

The associations are given for ATV61●●●●N4 and ATV61W●●●N4C drives. For ATV61H●●●M3, ATV61H●●●Y and ATV61H●●●S6X, please contact our Customer Care Centre.

Applications

Reduction of current harmonics in order to use drives in the first environment (restricted distribution, for domestic use, sale conditional on the competence of the user and the distributor in terms of reduction of current harmonics).

Variable speed drives

Altivar 61: reduction of current harmonics

Option: 50 Hz passive filters

VW3A46106

Passive filters: 400 V 50 Hz three-phase power supply

Motor rating		For ATV61 drives	Line supply	Filter		Quantity required per drive	Reference	Weight
			Line current	Nominal current				
				Input	Output			
kW	HP		A	A				kg
THDI 16% with ATV61H075N4…HD75N4 drives *(1)*								
0.75	1	H075N4	2.5	6	6.2	1	**VW3A46101**	10.000
1.5	2	HU15N4	3.6	6	6.2	1	**VW3A46101**	10.000
2.2	3	HU22N4	5	6	6.2	1	**VW3A46101**	10.000
3	–	HU30N4	6	6	6.2	1	**VW3A46101**	10.000
4	5	HU40N4	7.8	10	10.4	1	**VW3A46102**	13.500
5.5	7.5	HU55N4	10	10	10.4	1	**VW3A46102**	13.500
7.5	10	HU75N4	14	14	14.5	1	**VW3A46103**	16.300
11	15	HD11N4	19	22	23.0	1	**VW3A46104**	22.000
15	20	HD15N4	26	29	30.0	1	**VW3A46105**	25.000
18.5	25	HD18N4	32	35	36.5	1	**VW3A46106**	37.000
22	30	HD22N4	38	43	44.5	1	**VW3A46107**	39.000
30	40	HD30N4	52	58	60.0	1	**VW3A46108**	44.000
37	50	HD37N4	63	72	75.0	1	**VW3A46109**	56.000
45	60	HD45N4	77	86	89.5	1	**VW3A46110**	62.000
55	75	HD55N4	91	101	105.0	1	**VW3A46111**	74.000
75	100	HD75N4	126	144	150.0	1	**VW3A46112**	85.000
THDI 10% with ATV61W075N4...WD90N4C, ATV61HD90N4 and ATV61HC/QC11N4...HC/QC63N4 drives								
0.75	1	W075N4, W075N4C	2.5	6	6.2	1	**VW3A46101**	10.000
1.5	2	WU15N4, WU15N4C	3.6	6	6.2	1	**VW3A46101**	10.000
2.2	3	WU22N4, WU22N4C	5	6	6.2	1	**VW3A46101**	10.000
3	–	WU30N4, WU30N4C	6	6	6.2	1	**VW3A46101**	10.000
4	5	WU40N4, WU40N4C	7.8	10	10.4	1	**VW3A46102**	13.500
5.5	7.5	WU55N4, WU55N4C	10	10	10.4	1	**VW3A46102**	13.500
7.5	10	WU75N4, WU75N4C	14	14	14.5	1	**VW3A46103**	16.300
11	15	WD11N4, WD11N4C	19	22	23	1	**VW3A46104**	22.000
15	20	WD15N4, WD15N4C	26	29	30	1	**VW3A46105**	25.000
18.5	25	WD18N4, WD18N4C	32	35	36.5	1	**VW3A46106**	37.000
22	30	WD22N4, WD22N4C	38	43	44.5	1	**VW3A46107**	39.000
30	40	WD30N4, WD30N4C	52	58	60	1	**VW3A46108**	44.000
37	50	WD37N4, WD37N4C	63	72	75	1	**VW3A46109**	56.000
45	60	WD45N4, WD45N4C	77	86	89.5	1	**VW3A46110**	62.000
55	75	WD55N4, WD55N4C	91	101	105	1	**VW3A46111**	74.000
75	100	WD75N4, WD75N4C	126	144	150	1	**VW3A46112**	85.000
90	125	HD90N4 WD90N4, WD90N4C	149	144	150	1	**VW3A46112**	85.000
110	150	HC11N4, QC11N4	182	180	187	1	**VW3A46113**	102.000
132	200	HC13N4, QC13N4	218	217	225	1	**VW3A46114**	119.000
160	250	HC16N4, QC16N4	287	304	316	1	**VW3A46116**	142.000
200	300	HC22N4, QC20N4	353.5	380	395	1	**VW3A46118**	185.000
220	350	HC22N4, QC25N4	364	380	395	1	**VW3A46118**	185.000
250	400	HC25N4, QC25N4	415	433	450	1	**VW3A46119**	203.000
280	450	HC31N4, QC31N4	485	252	262	2	**VW3A46115**	119.000
315	500	HC31N4, QC31N4	543	304	316	2	**VW3A46116**	142.000
355	–	HC40N4, QC40N4	588	304	316	2	**VW3A46116**	142.000
400	600	HC40N4, QC40N4	664	325	338	2	**VW3A46117**	142.000
500	700	HC50N4, QC50N4	840	433	450	2	**VW3A46119**	203.000
560	800	HC63N4, QC63N4	978	325	338	3	**VW3A46117**	142.000
630	900	HC63N4, QC63N4	1091	380	395	3	**VW3A46118**	185.000

(1) By adding a DC choke (see page 1/64) to ATV61H075N4…HD75N4 drives, a total current harmonic distortion (THDI) ≤ 10% is obtained.
This DC choke is supplied as standard with ATV61HD90N4 and ATV61●C11N4 … ●C63N4 drives. These reduced current harmonics are achieved as long as the total voltage harmonic distortion (THDU) is < 2%, the short-circuit ratio (RSCE) is > 66%, and only for the nominal current of the passive filter.

Variable speed drives:
page 1/16

Drive/option combinations:
page 1/34

Variable speed drives

Altivar 61: reduction of current harmonics

Option: 50 Hz passive filters

Passive filters: 400 V 50 Hz three-phase power supply (continued)

Motor rating		For ATV61 drives	Line supply Line current	Filter Nominal current		Quantity required per drive	Reference	Weight
				Input	Output			
kW	*HP*		A	A				kg
THDI 10% with ATV61H075N4…HD75N4 drives *(1)*								
0.75	*1*	H075N4	2.5	6	6.2	1	**VW3A46120**	18.000
1.5	*2*	HU15N4	3.6	6	6.2	1	**VW3A46120**	18.000
2.2	*3*	HU22N4	5	6	6.2	1	**VW3A46120**	18.000
3	–	HU30N4	6	6	6.2	1	**VW3A46120**	18.000
4	*5*	HU40N4	7.8	10	10.4	1	**VW3A46121**	20.000
5.5	*7.5*	HU55N4	10	10	10.4	1	**VW3A46121**	30.000
7.5	*10*	HU75N4	14	14	14.5	1	**VW3A46122**	20.000
11	*15*	HD11N4	19	22	23	1	**VW3A46123**	30.000
15	*20*	HD15N4	26	29	30	1	**VW3A46124**	34.000
18.5	*25*	HD18N4	32	35	36.5	1	**VW3A46125**	52.000
22	*30*	HD22N4	38	43	44.5	1	**VW3A46126**	75.000
30	*40*	HD30N4	52	58	60	1	**VW3A46127**	82.000
37	*50*	HD37N4	63	72	75	1	**VW3A46128**	96.000
45	*60*	HD45N4	77	86	89.5	1	**VW3A46129**	104.000
55	*75*	HD55N4	91	101	105	1	**VW3A46130**	130.000
75	*100*	HD75N4	126	144	150	1	**VW3A46131**	126.000

(1) By adding a DC choke (see page 1/64) to ATV61H075N4…HD75N4 drives, a total current harmonic distortion (THDI) ≤ 5% is obtained.
These reduced current harmonics are achieved as long as the total voltage harmonic distortion (THDU) is < 2%, the short-circuit ratio (RSCE) is > 66%, and only for the nominal current of the passive filter.

Variable speed drives: page 1/16
Drive/option combinations: page 1/34

Variable speed drives

Altivar 61: reduction of current harmonics

Option: 50 Hz passive filters

Passive filters: 400 V 50 Hz three-phase power supply (continued)

Motor rating		For ATV61 drives	Line supply Line current	Filter Nominal current		Quantity required per drive	Reference	Weight
				Input	Output			
kW	*HP*		A	A				kg
THDI 5% with ATV61W075N4...WD90N4C, ATV61HD90N4 and ATV61HC/QC11N4...HC/QC63N4 drives								
0.75	*1*	W075N4, W075N4C	2.5	6	6.2	1	**VW3A46120**	18.000
1.5	*2*	WU15N4, WU15N4C	3.6	6	6.2	1	**VW3A46120**	18.000
2.2	*3*	WU22N4, WU22N4C	5	6	6.2	1	**VW3A46120**	18.000
3	–	WU30N4, WU30N4C	6	6	6.2	1	**VW3A46120**	18.000
4	*5*	WU40N4, WU40N4C	7.8	10	10.4	1	**VW3A46121**	18.000
5.5	*7.5*	WU55N4, WU55N4C	10	10	10.4	1	**VW3A46121**	18.000
7.5	*10*	WU40N4, WU40N4C	14	14	14.5	1	**VW3A46122**	20.000
11	*15*	WU55N4, WU55N4C	19	22	23	1	**VW3A46123**	30.000
15	*20*	WD15N4, WD15N4C	26	29	30	1	**VW3A46124**	34.000
18.5	*25*	WD18N4, WD18N4C	32	35	36.5	1	**VW3A46125**	52.000
22	*30*	WD22N4, WD22N4C	38	43	44.5	1	**VW3A46126**	75.000
30	*40*	WD30N4, WD30N4C	52	58	60	1	**VW3A46127**	82.000
37	*50*	WD37N4, WD37N4C	63	72	75	1	**VW3A46128**	96.000
45	*60*	WD45N4, WD45N4C	77	86	89.5	1	**VW3A46129**	104.000
55	*75*	WD55N4, WD55N4C	91	101	105.04	1	**VW3A46130**	130.000
75	*100*	WD75N4, WD75N4C	126	144	150	1	**VW3A46131**	126.000
90	*125*	HD90N4 WD90N4, WD90N4C	149	144	150	1	**VW3A46131**	126.000
110	*150*	HC11N4, QC11N4	182	180	187	1	**VW3A46132**	135.000
132	*200*	HC13N4, QC13N4	218	217	225	1	**VW3A46133**	171.000
160	*250*	HC16N4, QC16N4	287	304	316	1	**VW3A46135**	221.000
200	*300*	HC22N4, QC20N4	353.5	380	395	1	**VW3A46137**	265.000
220	*350*	HC22N4, QC25N4	364		395	1	**VW3A46137**	265.000
250	*400*	HC25N4, QC25N4	415	433	450	1	**VW3A46138**	272.000
280	*450*	HC31N4, QC31N4	485	252	262	2	**VW3A46134**	206.000
315	*500*	HC31N4, QC31N4	543	304	316	2	**VW3A46135**	221.000
355	–	HC40N4, QC40N4	588		316	2	**VW3A46135**	221.000
400	*600*	HC40N4, QC40N4	664	325	338	2	**VW3A46136**	230.000
500	*700*	HC50N4, QC50N4	840	433	450	2	**VW3A46138**	272.000
560	*800*	HC63N4, QC63N4	918	325	338	3	**VW3A46136**	230.000
630	*900*	HC63N4, QC63N4	1091	380	395	3	**VW3A46137**	265.000

Variable speed drives: page 1/16
Drive/option combinations: page 1/34

Variable speed drives

Altivar 61: reduction of current harmonics

Option: 60 Hz passive filters

Passive filters: 400 V 60 Hz three-phase power supply

Motor rating		For ATV61 drives	Line supply Line current	Filter Nominal current		Quantity required per drive	Reference	Weight
				Input	Output			
kW	*HP*		A	A				kg
THDI 16% with ATV61H075N4…HD75N4 drives *(1)*								
0.75	*1*	H075N4	2.5	6	6.2	1	**VW3A46139**	10.000
1.5	*2*	HU15N4	3	6	6.2	1	**VW3A46139**	10.000
2.2	*3*	HU22N4	5	6	6.2	1	**VW3A46139**	10.000
3	–	HU30N4	6	6	6.2	1	**VW3A46139**	10.000
4	*5*	HU40N4	7	10	10.4	1	**VW3A46140**	13.500
5.5	*7.5*	HU55N4	10	10	10.4	1	**VW3A46140**	13.500
7.5	*10*	HU75N4	13	14	14.5	1	**VW3A46141**	16.300
11	*15*	HD11N4	19	19	19.5	1	**VW3A46142**	22.000
15	*20*	HD15N4	24	25	26	1	**VW3A46143**	23.000
18.5	*25*	HD18N4	32	31	32	1	**VW3A46144**	33.000
22	*30*	HD22N4	35	36	37.5	1	**VW3A46145**	37.000
30	*40*	HD30N4	46	48	50	1	**VW3A46146**	38.000
37	*50*	HD37N4	58.7	60	62.5	1	**VW3A46147**	43.000
45	*60*	HD45N4	68	73	76	1	**VW3A46148**	55.000
55	*75*	HD55N4	82.6	95	99	1	**VW3A46149**	62.000
75	*100*	HD75N4	108	118	122.5	1	**VW3A46150**	74.000
THDI 10% with ATV61W075N4...WD90N4C, ATV61HD90N4 and ATV61HC/QC11N4...HC/QC63N4 drives								
0.75	*1*	W075N4, W075N4C	2.5	6	6.2	1	**VW3A46139**	10.000
1.5	*2*	WU15N4, WU15N4C	3		6.2	1	**VW3A46139**	10.000
2.2	*3*	WU22N4, WU22N4C	5		6.2	1	**VW3A46139**	10.000
3	–	WU30N4, WU30N4C	6		6.2	1	**VW3A46139**	10.000
4	*5*	WU40N4, WU40N4C	7	10	10.4	1	**VW3A46140**	13.500
5.5	*7.5*	WU55N4, WU55N4C	10		10.4	1	**VW3A46140**	13.500
7.5	*10*	WU75N4, WU75N4C	13	14	14.5	1	**VW3A46141**	16.300
11	*15*	WD11N4, WD11N4C	19	19	19.5	1	**VW3A46142**	22.000
15	*20*	WD15N4, WD15N4C	24	25	26	1	**VW3A46143**	25.000
18.5	*25*	WD18N4, WD18N4C	32	31	32	1	**VW3A46144**	37.000
22	*30*	WD22N4, WD22N4C	35	36	37.5	1	**VW3A46145**	39.000
30	*40*	WD30N4, WD30N4C	46	48	50	1	**VW3A46146**	44.000
37	*50*	WD37N4, WD37N4C	58.7	60	62.5	1	**VW3A46147**	56.000
45	*60*	WD45N4, WD45N4C	68	73	76	1	**VW3A46148**	62.000
55	*75*	WD55N4, WD55N4C	82.6	95	99	1	**VW3A46149**	74.000
75	*100*	WD75N4, WD75N4C	108	118	122.5	1	**VW3A46150**	85.000
90	*125*	HD90N4, WD90N4 WD90N4C	134	154	160	1	**VW3A46151**	85.000
110	*150*	HC11N4, QC11N4	163	183	190	1	**VW3A46152**	102.000
132	*200*	HC13N4, QC13N4	192	231	240	1	**VW3A46153**	119.000
160	*250*	HC16N4, QC16N4	235	231	240	1	**VW3A46153**	142.000
200	*300*	HC22N4, QC20N4	300	355	369	1	**VW3A46155**	185.000
220	*350*	HC22N4, QC25N4	330		369	1	**VW3A46155**	185.000
250	*400*	HC25N4, QC25N4	400	436	450	2	**VW3A46157**	203.000
280	*450*	HC31N4, QC31N4	440	436	450	2	**VW3A46157**	119.000
315	*500*	HC31N4, QC31N4	470	231	240	2	**VW3A46153**	136.000
355	–	HC40N4, QC40N4	530	291	302.5	2	**VW3A46154**	136.000
400	*600*	HC40N4, QC40N4	590	291	302.5	2	**VW3A46154**	142.000
500	*700*	HC50N4, QC50N4	730	380	395	3	**VW3A46156**	203.000
560	*800*	HC63N4, QC63N4	858	436	450	3	**VW3A46157**	142.000
630	*900*	HC63N4, QC63N4	964	355	369	3	**VW3A46155**	185.000

(1) By adding a DC choke (see page 1/64) to ATV61H075N4…HD75N4 drives, a total current harmonic distortion (THDI) ≤ 10% is obtained.
This DC choke is supplied as standard with ATV61HD90N4 and ATV61●C11N4 … ●C63N4 drives. These reduced current harmonics are achieved as long as the total voltage harmonic distortion (THDU) is < 2%, the short-circuit ratio (RSCE) is > 66%, and only for the nominal current of the passive filter.

Variable speed drives: page 1/16
Drive/option combinations: page 1/34

Variable speed drives

Altivar 61: reduction of current harmonics

Option: 60 Hz passive filters

Passive filters: 400 V 60 Hz three-phase power supply (continued)

Motor rating		For ATV61 drives	Line supply Line current	Filter Nominal current		Quantity required per drive	Reference	Weight
				Input	Output			
kW	*HP*		A	A				kg
THDI 10% with ATV61H075N4…HD75N4 drives *(1)*								
0.75	*1*	H075N4	2.5	6	6.2	1	**VW3A46158**	18.000
1.5	*2*	HU15N4	3	6	6.2	1	**VW3A46158**	18.000
2.2	*3*	HU22N4	4.2	6	6.2	1	**VW3A46158**	18.000
3	–	HU30N4	6	6	6.2	1	**VW3A46158**	18.000
4	*5*	HU40N4	7	10	10.4	1	**VW3A46159**	18.000
5.5	*7.5*	HU55N4	10	10	10.4	1	**VW3A46159**	18.000
7.5	*10*	HU75N4	13	14	14.5	1	**VW3A46160**	20.000
11	*15*	HD11N4	19	19	19.5	1	**VW3A46161**	30.000
15	*20*	HD15N4	24	25	26	1	**VW3A46162**	34.000
18.5	*25*	HD18N4	32	31	32	1	**VW3A46163**	52.000
22	*30*	HD22N4	35	36	37.5	1	**VW3A46164**	53.000
30	*40*	HD30N4	44	48	50	1	**VW3A46165**	57.000
37	*50*	HD37N4	58.7	60	62.5	1	**VW3A46166**	75.000
45	*60*	HD45N4	68	73	76	1	**VW3A46167**	97.000
55	*75*	HD55N4	82.6	95	99	1	**VW3A46168**	104.000
75	*100*	HD75N4	108	118	122.5	1	**VW3A46169**	106.000

(1) By adding a DC choke (see page 1/64) to ATV61H075N4…HD75N4 drives, a total current harmonic distortion (THDI) ≤ 5% is obtained.
These reduced current harmonics are achieved as long as the total voltage harmonic distortion (THDU) is < 2%, the short-circuit ratio (RSCE) is > 66%, and only for the nominal current of the passive filter.

Variable speed drives: page 1/16
Drive/option combinations: page 1/34

Schneider Electric

Variable speed drives

Altivar 61: reduction of current harmonics

Option: 60 Hz passive filters

Passive filters: 400 V 60 Hz three-phase power supply (continued)

Motor rating		For ATV61 drives	Line supply Line current	Filter Nominal current		Quantity required per drive	Reference	Weight
				Input	Output			
kW	*HP*		A	A				kg
THDI 5% with ATV61W075N4...WD90N4C, ATV61HD90N4 and ATV61HC/QC11N4...HC/QC63N4 drives								
0.75	*1*	W075N4, W075N4C	2.5	6	6.2	1	**VW3A46158**	18.000
1.5	*2*	WU15N4, WU15N4C	3	6	6.2	1	**VW3A46158**	18.000
2.2	*3*	WU22N4, WU22N4C	5	6	6.2	1	**VW3A46158**	18.000
3	–	WU30N4, WU30N4C	6	6	6.2	1	**VW3A46158**	18.000
4	*5*	WU40N4, WU40N4C	7	10	10.4	1	**VW3A46159**	18.000
5.5	*7.5*	WU55N4, WU55N4C	10	10	10.4	1	**VW3A46159**	18.000
7.5	*10*	WU40N4, WU40N4C	13	14	14.5	1	**VW3A46160**	20.000
11	*15*	WU55N4, WU55N4C	19	19	19.5	1	**VW3A46161**	30.000
15	*20*	WD15N4, WD15N4C	24	25	26	1	**VW3A46162**	34.000
18.5	*25*	WD18N4, WD18N4C	32	31	32	1	**VW3A46163**	52.000
22	*30*	WD22N4, WD22N4C	35	36	37.5	1	**VW3A46164**	53.000
30	*40*	WD30N4, WD30N4C	44	48	50	1	**VW3A46165**	57.000
37	*50*	WD37N4, WD37N4C	58.7	60	62.5	1	**VW3A46166**	75.000
45	*60*	WD45N4, WD45N4C	68	73	76	1	**VW3A46167**	97.000
55	*75*	WD55N4, WD55N4C	82.6	95	99	1	**VW3A46168**	104.000
75	*100*	WD75N4, WD75N4C	108	118	122.5	1	**VW3A46169**	106.000
90	*125*	HD90N4 WD90N4, WD90N4C	134	154	160	1	**VW3A46170**	126.000
110	*150*	HC11N4, QC11N4	163	183	190	1	**VW3A46171**	135.000
132	*200*	HC13N4, QC13N4	192	231	240	1	**VW3A46172**	170.000
160	*250*	HC16N4, QC16N4	235	231	302.5	1	**VW3A46172**	170.000
200	*300*	HC22N4, QC20N4	300.5	355	369	1	**VW3A46174**	229.000
220	*350*	HC22N4, QC25N4	330	355	369	1	**VW3A46174**	229.000
250	*400*	HC25N4, QC25N4	400	436	450	1	**VW3A46176**	270.000
280	*450*	HC31N4, QC31N4	440	436	450	2	**VW3A46176**	270.000
315	*500*	HC31N4, QC31N4	470	231	240	2	**VW3A46172**	170.000
355	–	HC40N4, QC40N4	530	291	316	2	**VW3A46173**	206.000
400	*600*	HC40N4, QC40N4	590	291	316	2	**VW3A46173**	206.000
500	*700*	HC50N4, QC50N4	730	380	395	2	**VW3A46175**	265.000
560	*800*	HC63N4, QC63N4	858	436	450	2	**VW3A46176**	270.000
630	*900*	HC63N4, QC63N4	964	355	369	3	**VW3A46174**	229.000

Variable speed drives:
page 1/16

Drive/option combinations:
page 1/34

Variable speed drives

Altivar 61: reduction of current harmonics

Option: Active Front End

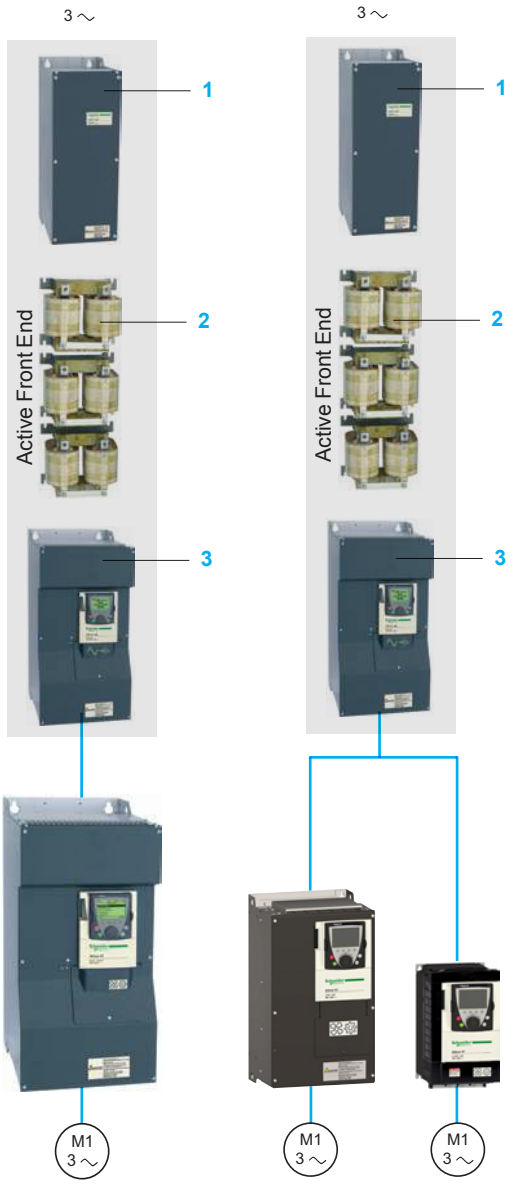

Active Front End + ATV61HC11N4D

Active Front End + ATV61HD22N4 + ATV61HU22N4

Presentation

The Active Front End allows the Altivar 61 drive to be used in applications requiring a particularly low harmonic level (THDI < 4%).
It complies with standard IEEE 519-1992.

It is available for a range of drives between 0.75 kW and 800 kW with three types of 50/60 Hz power supply:
380…440 V three-phase
480 V three-phase
500…690 V three-phase
It has been developed to comply with European directives and to obtain CE marking.

Apart from the possibility of significantly reducing the level of harmonics, this technology offers several benefits:
- Increased application dynamics
- Operation on unstable line supplies
- Amplification of the input voltage
- Reduced EMC emissions

The Active Front End consists of a set of three modules installed upstream of the drive between the line supply and the motor.
It is made up of the following elements:
A **line filter module (LFM)** 1, used at the input, incorporating:
A charging circuit
A line contactor
An EMC filter
A **line filter choke (LFC)** 2, consisting of three single-phase chokes, connected between the line filter module (LFM) and the active infeed converter (AIC)
An **active infeed converter (AIC)** 3

The Active Front End allows the Altivar 61 drive to be powered via the common DC bus, while limiting the total current distortion factor (THDI) to less than 4%.
It can also supply direct current to several drives of different power ratings, operating in parallel, should the installation require this.

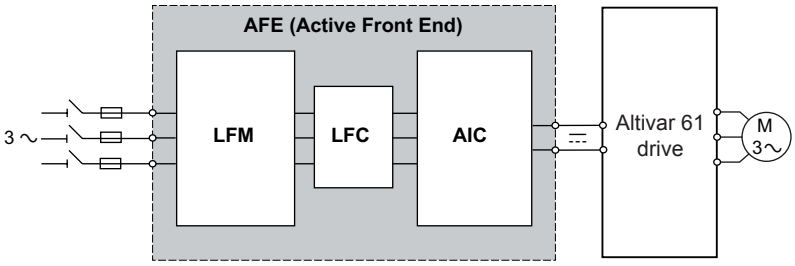

The Active Front End offers IP 00 protection. The ambient air temperature during operation must be between - 10°C and + 45°C (without derating, + 60°C with derating).

It is imperative that the protection of the Active Front End on the line supply side is supplemented by fuses for semi-conductors (to protect against short-circuits or a system failure).
The DC bus output only requires fuse protection if Active Front End modules are used in parallel.

Applications

Applications requiring a very low harmonic level
Applications with high inertia and strong dynamics
Applications on unstable line supplies

Variable speed drives: page 1/16
Drive/option combinations: page 1/34

Variable speed drives

Altivar 61: reduction of current harmonics

Option: Active Front End

References

For drives	Motor	Line supply	DC bus		Active Front End (1) (2)	Quantity per drive	Reference	Weight
	Power indicated on rating plate	Nominal line current 400 V	Maximum current	Continuous power 400 V				
	kW	A	A	kW				kg
Three-phase supply voltage: 380…440 V 50/60 Hz								
ATV61H075N4… HD90N4	0.75…90	160	185	120	AIC	1	**VW3A7250**	60.000
					LFC	1	**VW3A7265**	54.000
					LFM	1	**VW3A7260**	60.000
ATV61HC11N4D	110	160	185	120	AIC	1	**VW3A7250**	60.000
					LFC	1	**VW3A7265**	54.000
					LFM	1	**VW3A7260**	60.000
ATV61HC13N4D	132	200	220	143	AIC	1	**VW3A7251**	74.000
					LFC	1	**VW3A7266**	69.000
					LFM	1	**VW3A7261**	80.000
ATV61HC16N4D ...HC22N4D	220	348	366	238	AIC	1	**VW3A7253**	110.000
					LFC	1	**VW3A7267**	132.000
					LFM	1	**VW3A7262**	125.000
ATV61HC25N4D	250	395	412	268	AIC	1	**VW3A7254**	140.000
					LFC	1	**VW3A7267**	132.000
					LFM	1	**VW3A7262**	125.000
ATV61HC31N4D	315	495	517	336	AIC	1	**VW3A7255**	140.000
					LFC	1	**VW3A7267**	132.000
					LFM	1	**VW3A7262**	125.000
ATV61HC40N4D	400	628	654	425	AIC	1	**VW3A7256**	215.000
					LFC	2	**VW3A7267**	132.000
					LFM	2	**VW3A7262**	125.000
ATV61HC50N4D	500	780	815	530	AIC	1	**VW3A7257**	225.000
					LFC	2	**VW3A7267**	132.000
					LFM	2	**VW3A7262**	125.000
ATV61HC63N4D	630	980	1023	665	AIC	1	**VW3A7258**	300.000
					LFC	2	**VW3A7267**	132.000
					LFM	2	**VW3A7262**	125.000

Dimensions (overall)

Active infeed converter (AIC)	W x H x D mm
VW3A7250	310 x 680 x 377
VW3A7251	350 x 782 x 377
VW3A7253	430 x 950 x 377
VW3A7254	585 x 950 x 377
VW3A7255	585 x 950 x 377
VW3A7256	880 x 1150 x 377
VW3A7257	880 x 1150 x 377
VW3A7258	1110 x 1150 x 377

Line filter choke (LFC)	W x H x D mm
VW3A7265	835 x 210 x 185
VW3A7266	835 x 295 x 195
VW3A7267	1270 x 360 x 255

Line filter module (LFM)	W x H x D mm
VW3A7260	240 x 630 x 377
VW3A7261	290 x 730 x 377
VW3A7262	290 x 1100 x 377

(1) For more information about the Active Front End, please refer to the programming manual or visit our website www.schneider-electric.com.
(2) AIC = active infeed converter; LFC = line filter choke; LFM = line filter module.

Variable speed drives

Altivar 61: reduction of current harmonics

Option: Active Front End

References

For drives	Motor	Line supply	DC bus		Active Front End (1) (2)	Quantity per drive	Reference	Weight
	Power indicated on rating plate	Nominal line current 480 V	Maximum current	Continuous power 480 V				
	HP	A	A	kW				kg
Three-phase supply voltage: 480 V 50/60 Hz								
ATV61H075N4… HD90N4	*1…125*	160	185	120	AIC	1	**VW3A7250**	60.000
					LFC	1	**VW3A7265**	54.000
					LFM	1	**VW3A7260**	60.000
ATV61HC11N4D	*150*	160	185	120	AIC	1	**VW3A7250**	60.000
					LFC	1	**VW3A7265**	54.000
					LFM	1	**VW3A7260**	60.000
ATV61HC13N4D	*200*	200	220	143	AIC	1	**VW3A7251**	74.000
					LFC	1	**VW3A7266**	69.000
					LFM	1	**VW3A7261**	80.000
ATV61HC16N4D... HC22N4D	*350*	348	366	238	AIC	1	**VW3A7283**	110.000
					LFC	1	**VW3A7267**	132.000
					LFM	1	**VW3A7262**	125.000
ATV61HC25N4D	*400*	395	412	268	AIC	1	**VW3A7254**	140.000
					LFC	1	**VW3A7267**	132.000
					LFM	1	**VW3A7262**	125.000
ATV61HC31N4D	*500*	495	517	336	AIC	1	**VW3A7255**	140.000
					LFC	1	**VW3A7267**	132.000
					LFM	1	**VW3A7262**	125.000
ATV61HC40N4D	*600*	628	654	425	AIC	1	**VW3A7286**	215.000
					LFC	2	**VW3A7267**	132.000
					LFM	2	**VW3A7262**	125.000
ATV61HC50N4D	*700*	780	815	530	AIC	1	**VW3A7287**	225.000
					LFC	2	**VW3A7267**	132.000
					LFM	2	**VW3A7262**	125.000
ATV61HC63N4D	*900*	980	1023	665	AIC	1	**VW3A7258**	300.000
					LFC	2	**VW3A7267**	132.000
					LFM	2	**VW3A7262**	125.000

Dimensions (overall)

Active infeed converter (AIC)	W x H x D mm
VW3A7250	310 x 680 x 377
VW3A7251	350 x 782 x 377
VW3A7283	585 x 950 x 377
VW3A7254	585 x 950 x 377
VW3A7255	585 x 950 x 377
VW3A7286	1110 x 1150 x 377
VW3A7287	1110 x 1150 x 377
VW3A7258	1110 x 1150 x 377

Line filter choke (LFC)	W x H x D mm
VW3A7265	835 x 210 x 185
VW3A7266	835 x 295 x 195
VW3A7267	1270 x 360 x 255

Line filter module (LFM)	W x H x D mm
VW3A7260	240 x 630 x 377
VW3A7261	290 x 730 x 377
VW3A7262	290 x 1100 x 377

(1) For more information about the Active Front End, please refer to the programming manual or visit our website www.schneider-electric.com.
(2) AIC = active infeed converter; LFC = line filter choke; LFM = line filter module.

Variable speed drives

Altivar 61: reduction of current harmonics

Option: Active Front End

References

For drives	Motor	Line supply	DC bus				Active Front End (1) (2)	Quantity per drive	Reference	Weight
	Power indicated on rating plate	Maximum nominal line current	Maximum current	Continuous power						
		500 V…690 V		500 V	600 V	690 V				
	kW	A	A	kW	kW	kW				kg
Three-phase supply voltage: 500…690 V 50/60 Hz										
ATV61HC11Y *(3)*	110	120	130	102	123	142	AIC	1	**VW3A7270**	110.000
							LFC	1	**VW3A7268**	99.000
							LFM	1	**VW3A7263**	80.000
ATV61HC13Y *(3)*	132	120	130	102	123	142	AIC	1	**VW3A7270**	110.000
							LFC	1	**VW3A7268**	99.000
							LFM	1	**VW3A7263**	80.000
ATV61HC16Y *(3)*	160	150	156	127	153	172	AIC	1	**VW3A7271**	110.000
							LFC	1	**VW3A7268**	99.000
							LFM	1	**VW3A7263**	80.000
ATV61HC20Y *(3)*	200	185	195	157	188	215	AIC	1	**VW3A7272**	110.000
							LFC	1	**VW3A7268**	99.000
							LFM	1	**VW3A7263**	80.000
ATV61HC25Y *(3)*	250	228	244	193	230	268	AIC	1	**VW3A7273**	190.000
							LFC	1	**VW3A7269**	210.000
							LFM	1	**VW3A7264**	125.000
ATV61HC31Y *(3)*	315	285	305	242	290	335	AIC	1	**VW3A7274**	190.000
							LFC	1	**VW3A7269**	210.000
							LFM	1	**VW3A7264**	125.000
ATV61HC40Y *(3)*	400	360	386	305	365	424	AIC	1	**VW3A7275**	190.000
							LFC	1	**VW3A7269**	210.000
							LFM	1	**VW3A7264**	125.000
ATV61HC50Y *(4)*	500	450	481	382	460	528	AIC	1	**VW3A7276**	400.000
							LFC	2	**VW3A7269**	210.000
							LFM	2	**VW3A7264**	125.000
ATV61HC63Y *(4)*	630	563	604	478	575	663	AIC	1	**VW3A7277**	400.000
							LFC	2	**VW3A7269**	210.000
							LFM	2	**VW3A7264**	125.000
ATV61HC80Y *(4)*	800	715	765	607	730	842	AIC	1	**VW3A7278**	400.000
							LFC	2	**VW3A7269**	210.000
							LFM	2	**VW3A7264**	125.000

Dimensions (overall)

Active infeed converter (AIC)	W x H x D mm
VW3A7270	330 x 1190 x 377
VW3A7271	330 x 1190 x 377
VW3A7272	330 x 1190 x 377
VW3A7273	585 x 1190 x 377
VW3A7274	585 x 1190 x 377
VW3A7275	585 x 1190 x 377
VW3A7276	1110 x 1390 x 377
VW3A7277	1110 x 1390 x 377
VW3A7278	1110 x 1390 x 377

Line filter choke (LFC)	W x H x D mm
VW3A7268	835 x 295 x 210
VW3A7269	985 x 540 x 250

Line filter module (LFM)	W x H x D mm
VW3A7263	290 x 730 x 377
VW3A7264	290 x 1100 x 397

(1) For more information about the Active Front End, please refer to the programming manual or visit our website www.schneider-electric.com.
(2) AIC = active infeed converter; LFC = line filter choke; LFM = line filter module.
(3) Requires a 6 V fan wiring option, reference VW3A7280. For more information, please visit our website www.schneider-electric.com.
(4) Requires two 6 V fan wiring options, reference VW3A7280. For more information, please visit our website www.schneider-electric.com.

Variable speed drives: page 1/16
Drive/option combinations: page 1/34

Variable speed drives

Altivar 61: EMC filters

Integrated filters and optional additional filters

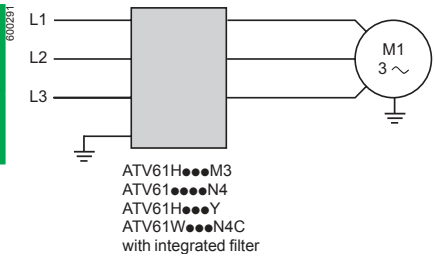

Altivar 61 drive with integrated EMC filter

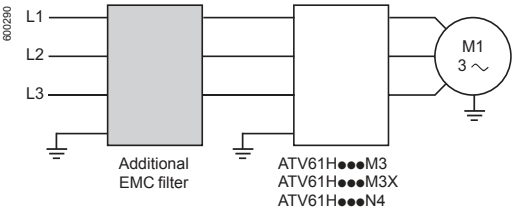

Altivar 61 drive with additional EMC filter

Mounting the EMC filter beside the Altivar 61 drive

Mounting the EMC filter under the Altivar 61 drive

Integrated EMC filters

Altivar 61 drives, except for the ATV61H●●●M3X, have built-in radio interference filters to meet the EMC standard for variable speed electrical power drive "products" IEC/EN 61800-3, edition 2, category C2 or C3 in environment 1 or 2 and to comply with the European Electromagnetic Compatibility Directive (EMC).

IP 20 drives

Drives	Maximum length of shielded cable *(1)* according to			
	EN 55011 class A Gr1		EN 55011 class A Gr2	
	IEC/EN 61800-3 cat. C2		IEC/EN 61800-3 cat. C3	
	LF *(2) (3)*	HF *(2) (3)*	LF *(2) (3)*	HF *(2) (3)*
	m	m	m	m
ATV61H075M3…HU22M3	10	5	–	–
ATV61HU30M3…HU75M3	–	–	10	5
ATV61H075N4…HU40N4	10	5	–	–
ATV61HU55N4…HD15N4	–	–	10	5
ATV61HD18N4…HC63N4	–	–	50	25
ATV61HU30Y…HD90Y	–	–	25	25
ATV61HC11Y…HC80Y	–	–	50	25

IP 54 drives

Drives	Maximum length of shielded cable *(1)* according to					
	EN 55011 class A Gr1			EN 55011 class B Gr1		
	IEC/EN 61800-3 cat. C2			IEC/EN 61800-3 cat. C1		
	LF *(2)*	HF *(2)*		LF *(2)*	HF *(2)*	
	2 kHz	8 kHz	16 kHz	2 kHz	8 kHz	16 kHz
	m	m	m	m	m	m
ATV61W●●●N4	80	50	50	–	–	–
ATV61W075N4C…WU40N4C	–	–	–	20	20	20
ATV61WU40N4C, WU55N4C	–	–	–	50	50	50
ATV61WU75N4C, WD11N4C	–	–	–	20	20	20
ATV61WD15N4C…WD22N4C	–	–	–	50	50	50
ATV61WD30N4C…WD45N4C	–	–	–	20	50	20
ATV61WD55N4C…WD90N4C	–	–	–	20	20	20

Additional EMC input filters

Applications

When used with ATV61H●●●M3, H●●●M3X and ATV61H●●●N4 drives, additional EMC input filters can be used to meet more stringent requirements and are designed to reduce conducted emissions on the line supply below the limits of standards EN 55011 group 1, class A or B and IEC/EN 61800-3 category C1 or C2.
For ATV61H075M3...HD45M3X and ATV61H075N4...HD75N4 drives, the additional EMC filters can be mounted beside or under the device. They act as a support for the drives and are attached to them via tapped holes.
For ATV61HD55M3X…HD90M3X and ATV61HD90N4…HC63N4, the additional EMC filters can only be mounted beside the drive.

Use according to the type of line supply

These additional filters can only be used on TN (neutral connection) and TT (earthed neutral) type systems.

Standard IEC/EN 61800-3, appendix D2.1, states that on IT systems (isolated or impedance earthed neutral), filters can cause permanent insulation monitors to operate in a random manner.

If a machine has to be installed on an IT system, one solution is to insert an isolation transformer and connect the machine locally on a TN or TT system.

(1) If motors are connected in parallel, it is the total cable length that should be taken into account.
(2) LF: low switching frequency. HF: high switching frequency.
(3) See note (5) on the next page.

Variable speed drives:
page 1/16

Drive/option combinations:
page 1/34

Schneider Electric

Variable speed drives

Altivar 61: EMC filters

Option: additional input filters

PF095117

VW3A44●●

Additional EMC input filters for ATV61H●●●M3, H●●●M3X and H●●●N4 drives

Drives	Maximum length of shielded cable (1)				In (2)	If (3)	Losses Reference (4)		Weight
	EN 55011 class A Gr1 IEC/EN 61800-3 category C2		EN 55011 class B Gr1 IEC/EN 61800-3 category C1						
	LF (5)	HF (5)	LF (5)	HF (5)					
	m	m	m	m	A	mA	W		kg
Three-phase supply voltage: 200…240 V 50/60 Hz									
ATV61H075M3, HU15M3	100	50	50	20	12	4	10	**VW3A4401**	2.200
ATV61HU22M3…HU40M3	100	50	50	20	26	4.4	18	**VW3A4402**	4.000
ATV61HU55M3	100	50	50	20	35	3	24	**VW3A4403**	5.800
ATV61HU75M3	100	50	50	20	46	10	19	**VW3A4404**	7.000
ATV61HD11M3X, HD15M3X	200	100	50	25	72	33	34	**VW3A4405**	12.000
ATV61HD18M3X, HD22M3X	200	100	50	25	90	33	34	**VW3A4406**	15.000
ATV61HD30M3X...HD45M3X	200	100	50	25	180	80	58	**VW3A4408**	40.000
ATV61HD55M3X, HD75M3X	100	50	50	25	273	285	60	**VW3A4410**	22.000
ATV61HD90M3X	100	50	50	25	336	500	125	**VW3A4411**	22.000
Three-phase supply voltage: 380…480 V 50/60 Hz									
ATV61H075N4…HU22N4	100	50	50	20	12	7	5	**VW3A4401**	2.200
ATV61HU30N4, HU40N	100	50	50	20	26	8	6	**VW3A4402**	4.000
ATV61HU55N4, HU75N4	100	50	50	20	35	7	14	**VW3A4403**	5.800
ATV61HD11N4	100	50	50	20	46	14	13	**VW3A4404**	7.000
ATV61HD15N4 *(6)*, HD18N4	300	200	100	100	72	60	14	**VW3A4405**	12.000
ATV61HD22N4	300	200	100	100	90	60	11	**VW3A4406**	15.000
ATV61HD30N4, HD37N4	300	200	100	100	92	60	30	**VW3A4407**	17.000
ATV61HD45N4…HD75N4	300	200	100	100	180	140	58	**VW3A4408**	40.000
ATV61HD90N4…HC16N4 ATV61QC11N4…QC16N4	300	150	50	25	273	500	60	**VW3A4410**	22.000
ATV61HC22N4…HC31N4 ATV61QC20N4…QC31N4	300	150	50	25	546	500	125	**VW3A4411**	25.000
ATV61HC40N4, HC50N4 ATV61QC40N4, QC50N4	300	150	50	25	728	500	210	**VW3A4412**	25.000
ATV61HC63N4 ATV61QC63N4	300	150	50	25	1456	200	380	**VW3A4413**	34.000

(1) The maximum lengths are given as examples only, as they vary depending on the stray capacitance of the motors and the cables used. If motors are connected in parallel, it is the total cable length that should be taken into account.
(2) Nominal filter current.
(3) Maximum earth leakage current at 230 V and at 400 V 50 Hz on a TT system.
(4) Via heat dissipation.
(5) LF: low switching frequency. HF: high switching frequency. These frequencies depend on the drive rating:

For drives	Switching frequency with integrated EMC filter		Switching frequency with additional EMC filter	
	LF	HF	LF	HF
	kHz	kHz	kHz	kHz
ATV61H●●●M3 ATV61H075N4…HD11N4	4	4.1…16	4	4.1…16
ATV61HD15N4…HD30N4	4	4.1…16	3.5...4	4.1…12
ATV61HD11M3X, HD15M3X	–	–	3.5...4	4.1…12
ATV61HD18M3X...HD45M3X	–	–	2…2.5	2.6…12
ATV61HD37N4...HD75N4	2…2.5	2.6…12	2…2.5	2.6…12
ATV61HD55M3X...HD90M3X	–	–	2.5…4	4.1…8
ATV61HD90N4...HC63N4 ATV61QC11N4…QC63N4	2…4	4.1…8	2…4	4.1…8
ATV61HU30Y…HD30Y	2.5…4	4.1…6	–	–
ATV61HD37Y…HC80Y	2.5	2.6…4.9	–	–

*(6) It is possible to use a special filter **VW3A4409** with a leakage current If (3) of 14 mA which enables a maximum motor cable length of 100 m.*

Variable speed drives
Altivar 61: output filters

The Altivar 61 drive includes as standard a software function used to limit overvoltages at the motor terminals.
Depending on the cable lengths or the type of application, it may be necessary to use output filters:
- Motor chokes used to limit the dv/dt
- Sinus filters that are particularly effective for long cable runs or to reduce electromagnetic motor noise

Cable length *(1)*	0…10 m	10…30 m	30…50 m	50…100 m	100…150 m	150…250 m	250…300 m	300…400 m	400…600 m
Shielded cable									
ATV61H●●●M3 ATV61H075N4…HD15N4 ATV61W075N4…WD15N4 ATV61W075N4C…WD15N4C	Software function *(2)*			Motor choke				–	
ATV61H●●●M3X ATV61HD18N4…HC63N4 ATV61WD18N4…WD90N4 ATV61WD18N4C…WD90N4C	Software function *(2)*				Motor choke			–	
ATV61HU22S6X…HU75S6X	Software function *(2)*		Motor choke			2 motor chokes in series	–		
ATV61HU30Y…HD11Y	Software function *(2)*	Motor choke			–				
ATV61HD15Y…HD30Y		Motor choke			2 motor chokes in series	–			
ATV61HD37Y…HD90Y		Motor choke				2 motor chokes in series	–		
ATV61HC11Y…HC80Y							Sinus filter		
Unshielded cable									
ATV61H075M3, HU15M3 ATV61H075N4...HU22N4 ATV61W075N4…WU22N4 ATV61W075N4C…WU22N4C	Software function *(2)*				Motor choke or sinus filter			–	
ATV61HU22M3, HU30M3 ATV61HU30N4…HU55N4 ATV61WU30N4…WU55N4 ATV61WU30N4C…WU55N4C	Software function *(2)*				Motor choke			Sinus filter	
ATV61HU40M3…HU75M3 ATV61HU75N4…HD15N4 ATV61WU75N4…WD15N4 ATV61WU75N4C…WD15N4C	Software function *(2)*				Motor choke			Sinus filter (300…1000 m)	
ATV61HD11M3X…HD45M3X ATV61HD18N4…HD75N4 ATV61WD18N4…WD90N4 ATV61WD18N4C…WD90N4C	Software function *(2)*					Motor choke		Sinus filter (300…1000 m)	
ATV61HD55M3X…HD90M3X ATV61HD90N4…HC63N4	Software function *(2)*					Motor choke		2 motor chokes in series	
ATV61HU22S6X…HU75S6X	Software function *(2)*			Motor choke			2 motor chokes in series		–
ATV61HU30Y…HD11Y *(3)*	Software function *(2)*	Motor choke (above 20 m)				2 motor chokes in series	–		
ATV61HD15Y…HD30Y *(3)*	Software function *(2)*	Motor choke (above 20 m)					2 motor chokes in series	–	
ATV61HD37Y…HD90Y *(3)*	Software function *(2)*	Motor choke (above 20 m)					2 motor chokes in series	–	
ATV61HC11Y…HC80Y	Software function *(2)*		Motor choke				2 motor chokes in series		Sinus filter

(1) The cable length varies depending on the combination of variable speed drive/motor choke or sinus filter (see pages 1/84, 1/85 and 1/87).
For an application with several motors connected in parallel, the cable length must include all cabling.
Recommended cable types:
- *Shielded cables: "GORSE" cable, type GUOSTV-LS/LH; "PROTOFLEX" cable, type EMV2YSL CY*
- *Unshielded cables: "GORSE" cable, type H07 RN-F4GXX; "BELDEN" cable, type 2950X*

(2) The software function limits the overvoltage at the motor terminals to twice the DC bus voltage.
For any application with braking cycles, the DC bus voltage rises to more than the supply voltage multiplied by $\sqrt{2}$.
You must check the electrical characteristics of the motor before using this function.
(3) Sinus filters can be used with ATV61HU●●Y and ATV61HD●●Y drives. For more information, please contact our Customer Care Centre.

Variable speed drives:
page 1/16

Drive/option combinations:
page 1/34

Variable speed drives

Altivar 61: output filters

Option: motor chokes

Motor chokes

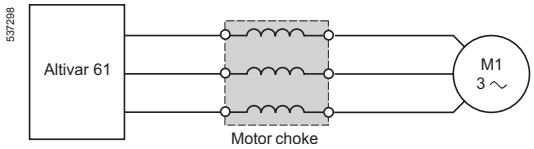

Altivar 61 drives have been developed to operate with the following maximum motor cable lengths:

For drives	Maximum length of motor cable		
	For a maximum switching frequency	Shielded cable	Unshielded cable
	kHz	m	m
ATV61H●●●M3 ATV61HD11M3X, HD15M3X ATV61H075N4…HD18N4 ATV61W075N4…WD18N4 ATV61W075N4C…WD18N4C	4	50	100
ATV61HD18M3X…HD90M3X ATV61HD37N4…HC63N4 ATV61QC11N4…QC63N4	2.5	100	200
ATV61HD22N4, HD30N4 ATV61WD22N4…WD90N4 ATV61WD22N4C…WD90N4C	4	100	200
ATV61H●●●S6X	4	30	50
ATV61HU30Y…HD30Y	4	10	20
ATV61HD37Y…HD90Y	2.5	10	20
ATV61HC11Y…HC80Y ATV61QC13Y…QC80Y	2.5	15	30

Motor chokes allow operation with motor cables which are longer than these maximum lengths and/or limit the dv/dt at the motor terminals to:
- 500 V/µs for 400 V three-phase line supplies
- 750 V/µs for 500 V three-phase line supplies
- 1000 V/µs for 500 V three-phase line supplies

They are also used to:
- Limit overvoltages at the motor terminals to:
  - 1000 V at 400 V ∼ (rms value)
  - 1300 V at 500 V ∼ (rms value)
  - 1600 V at 690 V ∼ (rms value)
- Filter interference caused by opening of a contactor placed between the filter and the motor
- Reduce the motor earth leakage current

Choke performance is ensured by not exceeding the cable lengths given on pages 1/84 and 1/85. For an application with several motors connected in parallel, the cable length must include all cabling. If a cable longer than that recommended is used, the motor chokes may overheat.

Variable speed drives:
page 1/16

Drive/option combinations:
page 1/34

Variable speed drives

Altivar 61: output filters

Option: motor chokes

VW3A5101

Motor chokes

For drives	Maximum length of motor cable: Maximum switching frequency	Shielded	Unshielded	Losses	Nominal current	Order in multiples of	Unit reference	Weight
	kHz	m	m	W	A			kg
Three-phase supply voltage: 200…240 V 50/60 Hz								
ATV61H075M3…HU22M3	4	150	300	150	12	–	**VW3A5101**	5.500
ATV61HU30M3…HU75M3	4	200	260	250	48	–	**VW3A5102**	8.000
		300	300	350	90	–	**VW3A5103**	10.000
ATV61HD11M3X, HD15M3X	4	150	300	350	90	–	**VW3A5103**	10.000
ATV61HD18M3X, HD22M3X	2.5	150	300	350	90	–	**VW3A5103**	10.000
ATV61HD30M3X…HD45M3X	2.5	150	300	430	215	3	**VW3A5104**	15.500
ATV61HD55M3X, HD75M3X	2.5	150	300	475	314	3	**VW3A5105**	32.000
ATV61HD90M3X	2.5	250	300	530	481	3	**VW3A5106**	58.000
Three-phase supply voltage: 380…480 V 50/60 Hz								
ATV61H075N4…HU40N4 ATV61W075N4…WU40N4 ATV61W075N4C…WU40N4C	4	75	90	150	12	–	**VW3A5101**	5.500
		85	95	250	48	–	**VW3A5102**	8.000
		160	200	350	90	–	**VW3A5103**	10.000
ATV61HU55N4…HD18N4 ATV61WU55N4…WD18N4 ATV61WU55N4C…WD18N4C	4	85	95	250	48	–	**VW3A5102**	8.000
		160	200	350	90	–	**VW3A5103**	10.000
		200	300	430	215	3	**VW3A5104**	15.500
ATV61HD22N4, HD30N4 ATV61WD22N4, WD30N4 ATV61WD22N4C, WD30N4C	4	140	170	350	90	–	**VW3A5103**	10.000
		150	300	430	215	3	**VW3A5104**	15.500
ATV61WD37N4 ATV61WD37N4C	4	97	166	350	90	–	**VW3A5103**	10.000
		200	300	430	215	3	**VW3A5104**	15.500
ATV61WD45N4…WD75N4 ATV61WD45N4C…WD75N4C	4	150	300	430	215	3	**VW3A5104**	15.500
ATV61WD90N4 ATV61WD90N4C	4	200	300	430	215	3	**VW3A5104**	15.500
ATV61HD37N4	2.5	97	166	350	90	–	**VW3A5103**	10.000
		200	300	430	215	3	**VW3A5104**	15.500
ATV61HD45N4…HD75N4	2.5	150	300	430	215	3	**VW3A5104**	15.500
ATV61HD90N4 ATV61QC11N4	2.5	200	300	430	215	3	**VW3A5104**	15.500
ATV61HC11N4, HC13N4 ATV61QC13N4, QC16N4	2.5	150	250	475	314	3	**VW3A5105**	32.000
ATV61HC16N4, HC22N4 ATV61QC20N4, QC25N4	2.5	250	300	530	481	3	**VW3A5106**	58.000
ATV61HC25N4, HC31N4 ATV61QC31N4	2.5	200	250	598	759	3	**VW3A5107**	93.000
ATV61HC40N4 Motor P 355 kW	2.5	200	250	598	759	3	**VW3A5107**	93.000
Motor P 400 kW	2.5	250	300	682	1188	3	**VW3A5108**	120.000
ATV61QC40N4	2.5	200	250	598	759	3	**VW3A5107**	93.000
ATV61HC50N4, HC63N4 ATV61QC50N4, QC63N4	2.5	250	300	682	1188	3	**VW3A5108**	120.000

Variable speed drives: page 1/16

Drive/option combinations: page 1/34

Schneider Electric

Variable speed drives

Altivar 61: output filters

Option: motor chokes

Motor chokes (continued)

For drives	Maximum length of motor cable			Losses	Nominal current	Order in multiples of	Unit reference	Weight
	Maximum switching frequency	Shielded	Unshielded					
	kHz	m	m	W	A			kg
Three-phase supply voltage: 500…600 V 50/60 Hz *(1)*								
ATV61HU22S6X… HU75S6X	4	50	100	250	48	–	**VW3A5102**	8.000
		75	150	350	90	–	**VW3A5103**	10.000
		150	250	700	90	–	**2 x VW3A5103**	20.000
		150	250	430	215	3	**VW3A5104**	15.500
		250	400	860	215	3	**2 x VW3A5104**	31.000
Three-phase supply voltage: 500…690 V 50/60 Hz *(2)*								
ATV61HU30Y…HD11Y	4	45	70	250	48	–	**VW3A5102**	8.000
		65	100	350	90	–	**VW3A5103**	10.000
		100	150	700	90	–	**2 x VW3A5103**	20.000
		100	150	430	215	3	**VW3A5104**	15.500
ATV61HD15Y…HD30Y	4	65	100	350	90	–	**VW3A5103**	10.000
		100	150	700	90	–	**2 x VW3A5103**	20.000
		100	150	430	215	3	**VW3A5104**	15.500
		150	250	860	215	3	**2 x VW3A5104**	31.000
ATV61HD37Y…HD90Y	2.5	150	250	430	215	3	**VW3A5104**	15.500
		250	300	860	215	3	**2 x VW3A5104**	31.000
ATV61HC11Y… HC16Y ATV61QC13Y	2.5	150	250	430	215	3	**VW3A5104**	15.500
		250	400	860	215	3	**2 x VW3A5104**	31.000
ATV61HC20Y, HC25Y ATV61QC16Y, QC20Y	2.5	150	250	475	314	3	**VW3A5105**	32.000
		250	400	950	314	3	**2 x VW3A5105**	64.000
ATV61HC31Y, HC40Y ATV61QC25Y, QC31Y	2.5	150	250	530	481	3	**VW3A5106**	58.000
		250	400	1060	481	3	**2 x VW3A5106**	116.000
ATV61HC50Y, HC63Y ATV61QC40Y, QC50Y	2.5	150	250	598	759	3	**VW3A5107**	93.000
		250	400	1196	759	3	**2 x VW3A5107**	186.000
ATV61HC80Y ATV61QC63Y, QC80Y	2.5	150	250	682	1188	3	**VW3A5108**	120.000
		250	400	1364	1188	3	**2 x VW3A5108**	240.000

IP 20 protection kits

Description	For motor chokes	Reference	Weight kg
Mechanical kit including an IP 20 cover and cable clips	VW3A5104, 105	**VW3A9612**	–
	VW3A5106…108	**VW3A9613**	–

(1) Maximum length given for a 600 V 60 Hz three-phase supply voltage.
(2) Maximum length given for a 690 V 50 Hz three-phase supply voltage.

Variable speed drives: page 1/16
Drive/option combinations: page 1/34

Sinus filters

Sinus filters allow Altivar 61 drives to operate with long motor cables or significant motor noise reduction.

For ATV61H●●●M3, ATV61HD11M3X...HD45M3X, ATV61H075N4…HD75N4, ATV61W075N4…WD90N4 and ATV61W075N4C…WD90N4C and ATV61HC11Y...HC80Y drives, they also allow the use of unshielded cables while still complying with the standards relating to radiated EMC emissions (EN 55011 class A Gr1 and IEC/EN 61800-3 category C2).

Sinus filters only operate with a voltage/frequency drive ratio.

Sinus filters are never compatible with the voltage sensorless flux vector control profile.

Applications

For ATV61H●●●M3, ATV61HD11M3X...HD45M3X, ATV61H075N4...HD75N4 and ATV61HC11Y...HC80Y drives, applications requiring:
- Long cable runs
- Mechanical restrictions preventing the use of shielded cables
- An intermediate transformer between the drive and the motor
- A reduction in motor noise
- Motors connected in parallel

For ATV61HD55M3X...HD90M3X, ATV61HD90N4...HC63N4 and ATV61HC11Y...HC80Y drives, applications requiring:
- An intermediate transformer between the drive and the motor
- A reduction in electromagnetic motor noise

When using a step-up voltage transformer for a motor current above 1000 V, use of a sinus filter is strongly recommended.

Sinus filters can be used with ATV61HU●●Y and ATV61HD●●Y drives. For more information, please contact our Customer Care Centre.

Variable speed drives

Altivar 61: output filters

Option: sinus filters

Sinus filters

For drives		Nominal current	Losses at 100 Hz	Reference	Weight
		A	W		kg
Three-phase supply voltage: 200...240 V 50/60 Hz					
ATV61H075M3, HU15M3 *(1)*		11	50	**VW3A5201**	8.000
ATV61HU22M3, HU30M3		16	70	**VW3A5202**	11.000
ATV61HU40M3... HU75M3		33	120	**VW3A5203**	22.000
ATV61HD11M3X, HD15M3X		66	180	**VW3A5204**	45.000
ATV61HD18M3X, HD22M3X		95	250	**VW3A5205**	60.000
ATV61HD30M3X... HD45M3X		180	400	**VW3A5206**	120.000
ATV61HD55M3X, HD75M3X		300	1360	**VW3A5208**	165.000
ATV61HD90M3X		400	1900	**VW3A5209**	190.000
Three-phase supply voltage: 380...480 V 50/60 Hz					
ATV61H075N4...HU40N4 *(1)* ATV61W075N4...WU40N4 ATV61W075N4C...WU40N4C		11	50	**VW3A5212**	8.000
ATV61HU55N4 ATV61WU55N4 ATV61WU55N4C		16	70	**VW3A5213**	11.000
ATV61HU75N4...HD15N4 ATV61WU75N4...WD15N4 ATV61WU75N4C...WD15N4C		33	120	**VW3A5214**	22.000
ATV61HD18N4...HD30N4 ATV61WD18N4...WD30N4 ATV61WD18N4C...WD30N4C		66	180	**VW3A5212**	45.000
ATV61HD37N4, HD45N4 ATV61WD37N4, WD45N4 ATV61WD37N4C, WD45N4C		95	250	**VW3A5213**	60.000
ATV61HD55N4, HD75N4 ATV61WD55N4, WD75N4 ATV61WD55N4C, WD75N4C		180	400	**VW3A5214**	120.000
ATV61HD90N4, HC11N4 ATV61WD90N4 ATV61WD90N4C ATV61QC11N4		200	945	**VW3A5212**	130.000
ATV61HC13N4, HC16N4 ATV61QC13N4, QC16N4		300	1360	**VW3A5213**	165.000
ATV61HC22N4 ATV61QC20N4		400	1900	**VW3A5214**	190.000
ATV61HC25N4 ATV61QC25N4		600	2370	**VW3A5212**	260.000
ATV61HC31N4 ATV61QC31N4		600	2370	**VW3A5213**	260.000
ATV61HC40N4 ATV61QC40N4	Motor P 355 kW/ *- HP*	600	2370	**VW3A5214**	260.000
	Motor P 400 kW/ *600 HP*	1200	5150	**VW3A5212**	600.000
ATV61HC50N4 ATV61QC50N4		1200	5150	**VW3A5213**	600.000
ATV61HC63N4 ATV61QC63N4		1200	5150	**VW3A5214**	600.000
Three-phase supply voltage: 500...690 V 50/60 Hz					
ATV61HC11Y...HC20Y		240	1500	**VW3A5212**	210.000
ATV61HC25Y...HC40Y		460	2800	**VW3A5213**	300.000
ATV61HC50Y...HC80Y		900	4810	**VW3A5214**	400.000

(1) For ATV61H075M3, HU15M3, ATV61H075N4 and HU15N4 drives, it is advisable to use a lower power motor with a sinus filter.

Variable speed drives:
page 1/16

Drive/option combinations:
page 1/34

Variable speed drives

Altivar 61

Motor starters: 200…240 V supply voltage

Applications

Circuit-breaker/contactor/drive combinations can be used to ensure continuous service of the installation with optimum safety.
The type of circuit-breaker/contactor coordination selected can reduce maintenance costs in the event of a motor short-circuit by minimizing the time required to make the necessary repairs and the cost of replacement equipment. The suggested combinations provide type 1 or type 2 coordination depending on the drive rating.

Type 2 coordination: A motor short-circuit will not damage the device or affect its settings. The motor starter should be able to operate once the electrical fault has been removed. The electrical isolation provided by the circuit-breaker will not be affected by the short-circuit. Welding of the contactor contacts is permissible if they can be separated easily.

Type 1 coordination: The electrical isolation provided by the circuit-breaker will not be affected by the incident and no other elements apart from the contactor are damaged as a result of the motor short-circuit.

The drive controls the motor, provides protection against short-circuits between the drive and the motor and protects the motor cable against overloads. Overload protection is provided by the drive's motor thermal protection. If this protection is removed, external thermal protection must be provided. Before restarting the installation, the cause of the trip must be removed.

DF526131

+

DF526153

+

PF107483SE

GV2L20
+
LC1D25●●
+
ATV61HU22M3

Motor starters for IP 20 drives

Motor Power *(1)* kW	HP	Drive Reference	Circuit-breaker Reference *(2)*	Rating A	Irm A	Line contactor Reference *(3) (4)*
Single-phase supply voltage: 200…240 V 50/60 Hz. Type 2 coordination						
0.37	*0.5*	**ATV61H075M3**	**GV2L14**	10	–	**LC1D09●●**
0.75	*1*	**ATV61HU15M3**	**GV2L16**	14	–	**LC1D18●●**
1.5	*2*	**ATV61HU22M3**	**GV2L20**	18	–	**LC1D25●●**
2.2	*3*	**ATV61HU30M3**	**GV2L32**	32	–	**LC1D32●●**
3	–	**ATV61HU40M3** *(5)*	**GV2L32**	32	–	**LC1D32●●**
4	*5*	**ATV61HU55M3** *(5)*	**GV3L40**	40	–	**LC1D40A●●**
5.5	*7.5*	**ATV61HU75M3** *(5)*	**GV3L50**	50	–	**LC1D50A●●**
Single-phase supply voltage: 200…240 V 50/60 Hz. Type 1 coordination						
0.37	*0.5*	**ATV61H075M3**	**GV2L14**	10	–	**LC1D09●●**
0.75	*1*	**ATV61HU15M3**	**GV2L16**	14	–	**LC1D09●●**
1.5	*2*	**ATV61HU22M3**	**GV2L20**	18	–	**LC1D09●●**
2.2	*3*	**ATV61HU30M3**	**GV2L32**	32	–	**LC1D18●●**
3	–	**ATV61HU40M3** *(5)*	**GV2L32**	32	–	**LC1D18●●**
4	*5*	**ATV61HU55M3** *(5)*	**GV3L40**	40	300	**LC1D32●●**
5.5	*7.5*	**ATV61HU75M3** *(5)*	**GV3L50**	50	300	**LC1D38●●**

(1) Standard power ratings for 230 V 50/60 Hz 4-pole motors.
The values expressed in HP conform to the NEC (National Electrical Code).
(2) Breaking capacity of circuit-breakers according to standard IEC 60947-2:

Circuit-breaker	Icu (kA) for 240 V
GV2L14, GV2L16	130
GV2L20, GV2L32 GV3L40, GV3L50	50

(3) Composition of contactors:
LC1D09 to LC1D50A: 3 poles + 1 N/O auxiliary contact and 1 N/C auxiliary contact.
(4) Replace ●● with the control circuit voltage reference indicated in the table below:

	Volts ∿	24	48	110	220	230	240
LC1D●●	50 Hz	**B5**	**E5**	**F5**	**M5**	**P5**	**U5**
	60 Hz	**B6**	**E6**	**F6**	**M6**	**–**	**U6**
	50/60 Hz	**B7**	**E7**	**F7**	**M7**	**P7**	**U7**

For other voltages available between 24 V and 660 V, or a DC control circuit, please contact our Customer Care Centre.
(5) A line choke must be added (see page 1/66).

Variable speed drives: page 1/16
Options: page 1/46
Drive/option combinations: page 1/34

Variable speed drives

Altivar 61

Motor starters: 200…240 V supply voltage

PDF107941

+

DF528156

+

PF107483SE

GV3L40
+
LC1D40A●●
+
ATV61HU55M3

Motor starters for IP 20 drives

Motor Power (1) kW	HP	Drive Reference	Circuit-breaker Reference (2)	Rating A	Irm A	Line contactor Reference (3) (4)
Three-phase supply voltage: 200…240 V 50/60 Hz. Type 2 coordination						
0.75	1	ATV61H075M3	GV2L10	6.3	–	LC1D09●●
1.5	2	ATV61HU15M3	GV2L16	14	–	LC1D18●●
2.2	3	ATV61HU22M3	GV2L20	18	–	LC1D18●●
3	–	ATV61HU30M3	GV2L22	25	–	LC1D25●●
4	5	ATV61HU40M3	GV2L32	32	–	LC1D25●●
5.5	7.5	ATV61HU55M3	GV3L40	40	–	LC1D40A●●
7.5	10	ATV61HU75M3	GV3L50	50	–	LC1D50A●●
11	15	ATV61HD11M3X	GV3L65	65	–	LC1D65A●●
15	20	ATV61HD15M3X	NS80HMA80	80	480	LC1D80●●
18.5	25	ATV61HD18M3X	NS80HMA80	80	480	LC1D80●●
22	30	ATV61HD22M3X	NSX100●MA100	100	600	LC1D95●●
30	40	ATV61HD30M3X	NSX160●MA150	150	1350	LC1D150●●
37	50	ATV61HD37M3X	NSX160●MA150	150	1350	LC1D150●●
45	60	ATV61HD45M3X	NSX250●MA220	220	1980	LC1F185●●
55	75	ATV61HD55M3X	NSX250●MA220	220	1980	LC1F225●●
75	100	ATV61HD75M3X	NSX400● Micrologic 1.3M	320	1920	LC1F265●●
90	125	ATV61HD90M3X	NSX630● Micrologic 1.3M	500	3000	LC1F330●●
Three-phase supply voltage: 200…240 V 50/60 Hz. Type 1 coordination						
0.75	1	ATV61H075M3	GV2L10	6.3	–	LC1D09●●
1.5	2	ATV61HU15M3	GV2L16	14	–	LC1D09●●
2.2	3	ATV61HU22M3	GV2L20	18	–	LC1D09●●
3	–	ATV61HU30M3	GV2L22	25	–	LC1D18●●
4	5	ATV61HU40M3	GV2L32	32	–	LC1D18●●
5.5	7.5	ATV61HU55M3	GV3L40	40	–	LC1D25●●
7.5	10	ATV61HU75M3	GV3L50	50	–	LC1D32●●
11	15	ATV61HD11M3X	GV3L65	65	–	LC1D40A●●
15	20	ATV61HD15M3X	NS80HMA80	80	480	LC1D50A●●
18.5	25	ATV61HD18M3X	NS80HMA80	80	480	LC1D50A●●
22	30	ATV61HD22M3X	NSX100●MA100	100	600	LC1D80●●
30	40	ATV61HD30M3X	NSX160●MA150	150	1350	LC1D95●●
37	50	ATV61HD37M3X	NSX160●MA150	150	1350	LC1D115●●
45	60	ATV61HD45M3X	NSX250●MA220	220	1980	LC1D115●●
55	75	ATV61HD55M3X	NSX250●MA220	220	1980	LC1D115●●
75	100	ATV61HD75M3X	NSX400● Micrologic 1.3M	320	1920	LC1F185●●
90	125	ATV61HD90M3X	NSX630● Micrologic 1.3M	500	3000	LC1F265●●

(1) Standard power ratings for 230 V 50/60 Hz 4-pole motors.
The values expressed in HP conform to the NEC (National Electrical Code).
(2) For references to be completed, replace the dot with the letter corresponding to the circuit-breaker breaking performance (B, F, N, H, S or L).
Breaking capacity of circuit-breakers according to standard IEC 60947-2:

Circuit-breaker	Icu (kA) for 240 V	B	F	N	H	S	L
GV2L10	130	–	–	–	–	–	–
GV2L16…L32 **GV3L40…L65**	50	–	–	–	–	–	–
NS80HMA	100	–	–	–	–	–	–
NSX100●MA…NSX250●MA	–	40	85	90	100	120	150
NSX400●, NSX630●	–	–	40	85	100	120	150

(3) Composition of contactors:
LC1D09 to LC1D150: 3 poles + 1 N/O auxiliary contact and 1 N/C auxiliary contact.
LC1F185 to LC1F330: 3 poles. To add auxiliary contacts or other accessories, please refer to the "Motor-starter solutions - Control and protection components" catalogue.
(4) Replace ●● with the control circuit voltage reference indicated in the table below:

	Volts ∿	24	48	110	220	230	240
LC1D09…D150	50 Hz	B5	E5	F5	M5	P5	U5
	60 Hz	B6	E6	F6	M6	–	U6
	50/60 Hz	B7	E7	F7	M7	P7	U7
LC1F185, F225	50 Hz (LX1 coil)	B5	E5	F5	M5	P5	U5
	60 Hz (LX1 coil)	–	E6	F6	M6	–	U6
	40…400 Hz (LX9 coil)	–	E7	F7	M7	P7	U7
LC1F265, LC1F330	40…400 Hz (LX1 coil)	B7	E7	F7	M7	P7	U7

For other voltages available between 24 V and 660 V, or a DC control circuit, please contact our Customer Care Centre.

Variable speed drives

Altivar 61

Motor starters: 380…415 V supply voltage

PF095316

+

DPF526158

+

PF107583SE

NSX160●MA150
+
LC1D115●●
+
ATV61HD45N4

Motor starters for IP 20 drives

Motor Power *(1)* kW	HP	Drive Reference	Circuit-breaker Reference *(2)*	Rating A	Irm A	Line contactor Reference *(4) (5)*
Three-phase supply voltage: 380…415 V 50/60 Hz. Type 2 coordination						
0.75	*1*	**ATV61H075N4**	**GV2L08**	4	–	**LC1D09●●**
1.5	*2*	**ATV61HU15N4**	**GV2L10**	6.3	–	**LC1D09●●**
2.2	*3*	**ATV61HU22N4**	**GV2L14**	10	–	**LC1D25●●**
3	–	**ATV61HU30N4**	**GV2L16**	14	–	**LC1D25●●**
4	*5*	**ATV61HU40N4**	**GV2L16**	14	–	**LC1D25●●**
5.5	*7.5*	**ATV61HU55N4**	**GV2L22**	25	–	**LC1D25●●**
7.5	*10*	**ATV61HU75N4**	**GV3L32**	32	–	**LC1D40A●●**
11	*15*	**ATV61HD11N4**	**GV3L40**	40	–	**LC1D50A●●**
15	*20*	**ATV61HD15N4**	**GV3L50**	50	–	**LC1D65A●●**
18.5	*25*	**ATV61HD18N4**	**GV3L50**	50	–	**LC1D65A●●**
22	*30*	**ATV61HD22N4**	**GV3L65**	65	–	**LC1D65A●●**
30	*40*	**ATV61HD30N4**	**NS80HMA80**	80	480	**LC1D80●●**
37	*50*	**ATV61HD37N4**	**NSX100●MA100**	100	600	**LC1D95●●**
45	*60*	**ATV61HD45N4**	**NSX160●MA150**	150	1350	**LC1D115●●**
55	*75*	**ATV61HD55N4**	**NSX160●MA150**	150	1350	**LC1D150●●**
75	*100*	**ATV61HD75N4**	**NSX250●MA220**	220	1980	**LC1F185●●**
90	*125*	**ATV61HD90N4**	**NSX250●MA220**	220	1980	**LC1F185●●**
110	*150*	**ATV61HC11N4**	**NSX250●MA220**	220	1980	**LC1F225●●**
132	*200*	**ATV61HC13N4**	**NSX400● Micrologic 1.3M**	320	1920	**LC1F265●●**
160	*250*	**ATV61HC16N4**	**NSX400● Micrologic 1.3M**	320	1920	**LC1F330●●**
200	*300*	**ATV61HC22N4**	**NSX630● Micrologic 1.3M**	500	3000	**LC1F400●●**
220	*350*	**ATV61HC22N4**	**NSX630● Micrologic 1.3M**	500	3000	**LC1F400●●**
250	*400*	**ATV61HC25N4**	**NSX630● Micrologic 1.3M**	500	3000	**LC1F500●●**
280	*450*	**ATV61HC31N4**	**NSX630● Micrologic 1.3M**	500	3000	**LC1F500●●**
315	*500*	**ATV61HC31N4**	**NS800L Micrologic 2 or 5 (LR OFF)**	800	1600	**LC1F630●●**
355	–	**ATV61HC40N4**	**NS800L Micrologic 2 or 5 (LR OFF)**	800	1600	**LC1F630●●**
400	*600*	**ATV61HC40N4**	**NS800L Micrologic 2 or 5 (LR OFF)**	800	1600	**LC1F800●●**
500	*700*	**ATV61HC50N4**	**NS1000L Micrologic 2 or 5 (LR OFF)**	1000	2000	**LC1BL●●**
560	*800*	**ATV61HC63N4**	**NS1000L Micrologic 2 or 5 (LR OFF)**	1000	2000	**LC1BM●●**

(1) Standard power ratings for 400 V 50/60 Hz 4-pole motors.
The values expressed in HP conform to the NEC (National Electrical Code).
(2) For references to be completed, replace the dot with the letter corresponding to the circuit-breaker breaking performance (B, F, N, H, S or L).
Breaking capacity of circuit-breakers according to standard IEC 60947-2:

Circuit-breaker	Icu (kA) for 400 V	B	F	N	H	S	L
GV2L08…L16 *(3)*	130	–	–	–	–	–	–
GV2L16 *(3)*, **GV2L22 GV3L32…L65**	50	–	–	–	–	–	–
NS80HMA	70	–	–	–	–	–	–
NSX100●MA…NSX250●MA	–	25	36	50	70	100	150
NSX400●, NSX630●	–	–	36	50	70	100	150
NS800L Micrologic 2 or 5 NS1000L Micrologic 2 or 5	–	–	–	–	–	–	150

(3) GV2L16: Icu of 130 when combined with an ATV61HU30N4, Icu of 50 when combined with an ATV61HU40N4.
(4) Composition of contactors:
LC1D09 to LC1D150: 3 poles + 1 N/O auxiliary contact and 1 N/C auxiliary contact.
LC1F●●●, LC1BL and LC1BM*: 3 poles. To add auxiliary contacts or other accessories, please refer to the "Motor-starter solutions - Control and protection components" catalogue.*
(5) Replace ●● with the control circuit voltage reference indicated in the table below:

	Volts ∿	24	48	110	220	230	240
LC1D09…D150	50 Hz	**B5**	**E5**	**F5**	**M5**	**P5**	**U5**
	60 Hz	**B6**	**E6**	**F6**	**M6**	**–**	**U6**
	50/60 Hz	**B7**	**E7**	**F7**	**M7**	**P7**	**U7**
LC1F185, F225	50 Hz (LX1 coil)	**B5**	**E5**	**F5**	**M5**	**P5**	**U5**
	60 Hz (LX1 coil)	**–**	**E6**	**F6**	**M6**	**–**	**U6**
	40…400 Hz (LX9 coil)	**–**	**E7**	**F7**	**M7**	**P7**	**U7**
LC1F265, F330	40…400 Hz (LX1 coil)	**B7**	**E7**	**F7**	**M7**	**P7**	**U7**
LC1F400…F800	40…400 Hz (LX1 coil)	**–**	**E7**	**F7**	**M7**	**P7**	**U7**
LC1BL, LC1BM	50…400 Hz (WB1 coil)	**–**	**–**	**F**	**M**	**P**	**U**

For other voltages available between 24 V and 660 V, or a DC control circuit, please contact our Customer Care Centre.

Variable speed drives

Altivar 61

Motor starters: 380…415 V supply voltage

PF5096316

+

DF526157

+

PF5107581SE

NSX100●MA100
+
LC1D95●●
+
ATV61HD37N4

Motor starters for IP 20 drives

Motor Power (1) kW	HP	Drive Reference	Circuit-breaker Reference (2)	Rating A	Irm A	Line contactor Reference (3) (4)
Three-phase supply voltage: 380…415 V 50/60 Hz. Type 1 coordination						
0.75	1	**ATV61H075N4**	**GV2L08**	4	–	**LC1D09●●**
1.5	2	**ATV61HU15N4**	**GV2L10**	6.3	–	**LC1D09●●**
2.2	3	**ATV61HU22N4**	**GV2L14**	10	–	**LC1D09●●**
3	–	**ATV61HU30N4**	**GV2L16**	14	–	**LC1D09●●**
4	5	**ATV61HU40N4**	**GV2L16**	14	–	**LC1D18●●**
5.5	7.5	**ATV61HU55N4**	**GV2L22**	25	–	**LC1D25●●**
7.5	10	**ATV61HU75N4**	**GV3L32**	32	–	**LC1D40A●●**
11	15	**ATV61HD11N4**	**GV3L40**	40	–	**LC1D40A●●**
15	20	**ATV61HD15N4**	**GV3L50**	50	–	**LC1D50A●●**
18.5	25	**ATV61HD18N4**	**GV3L50**	50	–	**LC1D50A●●**
22	30	**ATV61HD22N4**	**GV3L65**	65	–	**LC1D65A●●**
30	40	**ATV61HD30N4**	**NS80HMA80**	80	480	**LC1D65A●●**
37	50	**ATV61HD37N4**	**NSX100●MA100**	100	600	**LC1D95●●**
45	60	**ATV61HD45N4**	**NSX160●MA150**	150	1350	**LC1D115●●**
55	75	**ATV61HD55N4**	**NSX160●MA150**	150	1350	**LC1D115●●**
75	100	**ATV61HD75N4**	**NSX250●MA220**	220	1980	**LC1F185●●**
90	125	**ATV61HD90N4**	**NSX250●MA220**	220	1980	**LC1F185●●**
110	150	**ATV61HC11N4**	**NSX250●MA220**	220	1980	**LC1F225●●**
132	200	**ATV61HC13N4**	**NSX400● Micrologic 1.3M**	320	1920	**LC1F265●●**
160	250	**ATV61HC16N4**	**NSX400● Micrologic 1.3M**	320	1920	**LC1F330●●**
200	300	**ATV61HC22N4**	**NSX630● Micrologic 1.3M**	500	3000	**LC1F400●●**
220	350	**ATV61HC22N4**	**NSX630● Micrologic 1.3M**	500	3000	**LC1F400●●**
250	400	**ATV61HC25N4**	**NSX630● Micrologic 1.3M**	500	3000	**LC1F500●●**
280	450	**ATV61HC31N4**	**NSX630● Micrologic 1.3M**	500	3000	**LC1F500●●**
315	500	**ATV61HC31N4**	**NS800L Micrologic 2 or 5 (LR OFF)**	800	1600	**LC1F630●●**
355	–	**ATV61HC40N4**	**NS800L Micrologic 2 or 5 (LR OFF)**	800	1600	**LC1F630●●**
400	600	**ATV61HC40N4**	**NS800L Micrologic 2 or 5 (LR OFF)**	800	1600	**LC1F630●●**
500	700	**ATV61HC50N4**	**NS1000L Micrologic 2 or 5 (LR OFF)**	1000	2000	**LC1F630●●**
560	800	**ATV61HC63N4**	**NS1000L Micrologic 2 or 5 (LR OFF)**	1000	2000	**LC1F630●●**
630	900	**ATV61HC63N4**	**NS1250 Micrologic 2 or 5 (LR OFF)**	1000	2000	**LC1F630●●**

(1) Standard power ratings for 400 V 50/60 Hz 4-pole motors.
The values expressed in HP conform to the NEC (National Electrical Code).
(2) For references to be completed, replace the dot with the letter corresponding to the circuit-breaker breaking performance (B, F, N, H, S or L).
Breaking capacity of circuit-breakers according to standard IEC 60947-2:

Circuit-breaker	Icu (kA) for 400 V	B	F	N	H	S	L
GV2L08…L14	130	–	–	–	–	–	–
GV2L16, GV2L22 GV3L32…L65	50	–	–	–	–	–	–
NS80HMA	70	–	–	–	–	–	–
NSX100●MA…NSX250●MA	–	25	36	50	65	100	150
NSX400●, NSX630●	–	–	36	50	65	100	150
NS800L Micrologic 2 or 5 NS1000L Micrologic 2 or 5	–	–	–	–	–	–	150
NS1250 Micrologic 2 or 5	–	–	–	50	65	–	–

(3) Composition of contactors:
LC1D09 to LC1D115: 3 poles + 1 N/O auxiliary contact and 1 N/C auxiliary contact.
LC1F185 to F630: 3 poles. To add auxiliary contacts or other accessories, please refer to the "Motor-starter solutions - Control and protection components" catalogue.
(4) Replace ●● with the control circuit voltage reference indicated in the table below:

	Volts ∿	24	48	110	220	230	240
LC1D09…D115	50 Hz	**B5**	**E5**	**F5**	**M5**	**P5**	**U5**
	60 Hz	**B6**	**E6**	**F6**	**M6**	**–**	**U6**
	50/60 Hz	**B7**	**E7**	**F7**	**M7**	**P7**	**U7**
LC1F185, F225	50 Hz (LX1 coil)	**B5**	**E5**	**F5**	**M5**	**P5**	**U5**
	60 Hz (LX1 coil)	**–**	**E6**	**F6**	**M6**	**–**	**U6**
	40…400 Hz (LX9 coil)	**–**	**E7**	**F7**	**M7**	**P7**	**U7**
LC1F265, F330	40…400 Hz (LX1 coil)	**B7**	**E7**	**F7**	**M7**	**P7**	**U7**
LC1F400…F630	40…400 Hz (LX1 coil)	**–**	**E7**	**F7**	**M7**	**P7**	**U7**

For other voltages available between 24 V and 660 V, or a DC control circuit, please contact our Customer Care Centre.

Variable speed drives

Altivar 61

Motor starters: 380…415 V supply voltage

PF095317

+

DPF526158

+

PF107492SE

NSX160●MA150
+
LC1D115●●
+
ATV61WD55N4

Motor starters for IP 54 drives

Motor Power (1) kW	HP	Drive Reference	Circuit-breaker Reference (2)	Rating A	Irm A	Line contactor Reference (3) (4)
Three-phase supply voltage: 380…415 V 50/60 Hz. Type 2 coordination						
0.75	1	ATV61W075N4 ATV61W075N4C	GV2L07	2.5	–	LC1D09●●
1.5	2	ATV61WU15N4 ATV61WU15N4C	GV2L08	4	–	LC1D09●●
2.2	3	ATV61WU22N4 ATV61WU22N4C	GV2L10	6.3	–	LC1D09●●
3	–	ATV61WU30N4 ATV61WU30N4C	GV2L14	10	–	LC1D25●●
4	5	ATV61WU40N4 ATV61WU40N4C	GV2L14	10	–	LC1D25●●
5.5	7.5	ATV61WU55N4 ATV61WU55N4C	GV2L16	14	–	LC1D25●●
7.5	10	ATV61WU75N4 ATV61WU75N4C	GV3L32	32	–	LC1D40A●●
11	15	ATV61WD11N4 ATV61WD11N4C	GV3L40	40	–	LC1D40A●●
15	20	ATV61WD15N4 ATV61WD15N4C	GV3L50	50	–	LC1D50A●●
18.5	25	ATV61WD18N4 ATV61WD18N4C	GV3L50	50	–	LC1D50A●●
22	30	ATV61WD22N4 ATV61WD22N4C	GV3L65	65	–	LC1D65A●●
30	40	ATV61WD30N4 ATV61WD30N4C	NS80HMA80	80	480	LC1D80●●
37	50	ATV61WD37N4 ATV61WD37N4C	NS80HMA80	80	480	LC1D80●●
45	60	ATV61WD45N4 ATV61WD45N4C	NSX100●MA100	100	600	LC1D95●●
55	75	ATV61WD55N4 ATV61WD55N4C	NSX160●MA150	150	1350	LC1D115●●
75	100	ATV61WD75N4 ATV61WD75N4C	NSX160●MA150	150	1350	LC1D150●●
90	125	ATV61WD90N4 ATV61WD90N4C	NSX250●MA220	220	1980	LC1F185●●

(1) Standard power ratings for 400 V 50/60 Hz 4-pole motors.
The values expressed in HP conform to the NEC (National Electrical Code).
(2) For references to be completed, replace the dot with the letter corresponding to the circuit-breaker breaking performance (B, F, N, H, S or L).
Breaking capacity of circuit-breakers according to standard IEC 60947-2:

Circuit-breaker	Icu (kA) for 400 V	B	F	N	H	S	L
GV2L07…L14	130	–	–	–	–	–	–
GV2L16 GV3L32…L65	50	–	–	–	–	–	–
NS80HMA	70	–	–	–	–	–	–
NSX100●MA …250●MA	–	25	36	50	70	100	150

(3) Composition of contactors:
LC1D09 to LC1D150: 3 poles + 1 N/O auxiliary contact and 1 N/C auxiliary contact.
LC1F185: 3 poles. To add auxiliary contacts or other accessories, please refer to the "Motor-starter solutions - Control and protection components" catalogue.
(4) Replace ●● with the control circuit voltage reference given in the table below:

	Volts ∿	24	48	110	220	230	240
LC1D09…D150	50 Hz	B5	E5	F5	M5	P5	U5
	60 Hz	B6	E6	F6	M6	–	U6
	50/60 Hz	B7	E7	F7	M7	P7	U7
LC1F185	50 Hz (LX1 coil)	B5	E5	F5	M5	P5	U5
	60 Hz (LX1 coil)	–	E6	F6	M6	–	U6
	40…400 Hz (LX9 coil)	–	E7	F7	M7	P7	U7

For other voltages available between 24 V and 660 V, or a DC control circuit, please contact our Customer Care Centre.

Variable speed drives: page 1/16
Options: page 1/46
Drive/option combinations: page 1/34

Schneider Electric

Variable speed drives

Altivar 61

Motor starters: 380…415 V supply voltage

DF526131

+

DF526150

+

PF107495SE

GV2L07
+
LC1D09●●
+
ATV61W075N4

Motor starters for IP 54 drives

Motor Power (1) kW	HP	Drive Reference	Circuit-breaker Reference (2)	Rating A	Irm A	Line contactor Reference (3) (4)
Three-phase supply voltage: 380…415 V 50/60 Hz. Type 1 coordination						
0.75	*1*	**ATV61W075N4** **ATV61W075N4C**	**GV2L07**	2.5	–	**LC1D09●●**
1.5	*2*	**ATV61WU15N4** **ATV61WU15N4C**	**GV2L08**	4	–	**LC1D09●●**
2.2	*3*	**ATV61WU22N4** **ATV61WU22N4C**	**GV2L10**	6.3	–	**LC1D09●●**
3	–	**ATV61WU30N4** **ATV61WU30N4C**	**GV2L14**	10	–	**LC1D09●●**
4	*5*	**ATV61WU40N4** **ATV61WU40N4C**	**GV2L14**	10	–	**LC1D18●●**
5.5	*7.5*	**ATV61WU55N4** **ATV61WU55N4C**	**GV2L16**	14	–	**LC1D18●●**
7.5	*10*	**ATV61WU75N4** **ATV61WU75N4C**	**GV3L32**	32	–	**LC1D25●●**
11	*15*	**ATV61WD11N4** **ATV61WD11N4C**	**GV3L40**	40	–	**LC1D40A●●**
15	*20*	**ATV61WD15N4** **ATV61WD15N4C**	**GV3L50**	40	–	**LC1D50A●●**
18.5	*25*	**ATV61WD18N4** **ATV61WD18N4C**	**GV3L50**	50	–	**LC1D50A●●**
22	*30*	**ATV61WD22N4** **ATV61WD22N4C**	**GV3L65**	65	–	**LC1D65A●●**
30	*40*	**ATV61WD30N4** **ATV61WD30N4C**	**NS80HMA80**	80	480	**LC1D65A●●**
37	*50*	**ATV61WD37N4** **ATV61WD37N4C**	**NS80HMA80**	80	480	**LC1D80●●**
45	*60*	**ATV61WD45N4** **ATV61WD45N4C**	**NSX100●MA100**	100	600	**LC1D80●●**
55	*75*	**ATV61WD55N4** **ATV61WD55N4C**	**NSX160●MA150**	150	1350	**LC1D115●●**
75	*100*	**ATV61WD75N4** **ATV61WD75N4C**	**NSX160●MA150**	150	1350	**LC1D150●●**
90	*125*	**ATV61WD90N4** **ATV61WD90N4C**	**NSX250●MA220**	220	1980	**LC1F185●●**

(1) Standard power ratings for 400 V 50/60 Hz 4-pole motors.
The values expressed in HP conform to the NEC (National Electrical Code).
(2) For references to be completed, replace the dot with the letter corresponding to the circuit-breaker breaking performance (B, F, N, H, S or L).
Breaking capacity of circuit-breakers according to standard IEC 60947-2:

Circuit-breaker	Icu (kA) for 400 V	B	F	N	H	S	L
GV2L07…L14	130	–	–	–	–	–	–
GV2L16 **GV3L32…L65**	50	–	–	–	–	–	–
NS80HMA	70	–	–	–	–	–	–
NSX100●MA… NSX250●MA	–	25	36	50	70	100	150

(3) Composition of contactors:
LC1D09 to LC1D150: 3 poles + 1 N/O auxiliary contact and 1 N/C auxiliary contact.
LC1F185: 3 poles. To add auxiliary contacts or other accessories, please refer to the "Motor-starter solutions - Control and protection components" catalogue.
Replace ●● with the control circuit voltage reference indicated in the table below:

	Volts ∿	24	48	110	220	230	240
LC1D09…D150	50 Hz	**B5**	**E5**	**F5**	**M5**	**P5**	**U5**
	60 Hz	**B6**	**E6**	**F6**	**M6**	**–**	**U6**
	50/60 Hz	**B7**	**E7**	**F7**	**M7**	**P7**	**U7**
LC1F185	50 Hz (LX1 coil)	**B5**	**E5**	**F5**	**M5**	**P5**	**U5**
	60 Hz (LX1 coil)	**–**	**E6**	**F6**	**M6**	**–**	**U6**
	40…400 Hz (LX9 coil)	**–**	**E7**	**F7**	**M7**	**P7**	**U7**

For other voltages available between 24 V and 660 V, or a DC control circuit, please contact our Customer Care Centre.

Variable speed drives

Altivar 61

Motor starters: 440…480 V supply voltage

PF095316

+

DPF526158

+

PF107583SE

NSX100●MA150
+
LC1D115●●
+
ATV61HD45N4

Motor starters for IP 20 drives

Motor Power *(1)* kW	HP	Drive Reference	Circuit-breaker Reference *(2)*	Rating A	Irm A	Line contactor Reference *(4) (5)*
Three-phase supply voltage: 440…480 V 50/60 Hz. Type 2 coordination						
0.75	*1*	**ATV61H075N4**	**GV2L08**	4	–	**LC1D25●●**
1.5	*2*	**ATV61HU15N4**	**GV2L10**	6.3	–	**LC1D25●●**
2.2	*3*	**ATV61HU22N4**	**GV2L14**	10	–	**LC1D25●●**
3	–	**ATV61HU30N4**	**GV2L14**	10	–	**LC1D25●●**
4	*5*	**ATV61HU40N4**	**GV2L16**	14	–	**LC1D25●●**
5.5	*7.5*	**ATV61HU55N4**	**GV2L20**	18	–	**LC1D25●●**
7.5	*10*	**ATV61HU75N4**	**GV3L25**	25	–	**LC1D32●●**
11	*15*	**ATV61HD11N4**	**GV3L32**	32	–	**LC1D40A●●**
15	*20*	**ATV61HD15N4**	**GV3L50**	50	–	**LC1D50A●●**
18.5	*25*	**ATV61HD18N4**	**GV3L50**	50	–	**LC1D50A●●**
22	*30*	**ATV61HD22N4**	**GV3L50**	50	–	**LC1D65A●●**
30	*40*	**ATV61HD30N4**	**GV3L65**	65	–	**LC1D65A●●**
37	*50*	**ATV61HD37N4**	**NS80HMA80**	80	480	**LC1D80●●**
45	*60*	**ATV61HD45N4**	**NSX100●MA100**	100	600	**LC1D115●●**
55	*75*	**ATV61HD55N4**	**NSX160●MA150**	150	1350	**LC1D115●●**
75	*100*	**ATV61HD75N4**	**NSX250●MA220**	220	1980	**LC1F185●●**
90	*125*	**ATV61HD90N4**	**NSX250●MA220**	220	1980	**LC1F185●●**
110	*150*	**ATV61HC11N4**	**NSX250●MA220**	220	1980	**LC1F185●●**
132	*200*	**ATV61HC13N4**	**NSX250●MA220**	220	1980	**LC1F265●●**
160	*250*	**ATV61HC16N4**	**NSX400● Micrologic 1.3M**	320	1920	**LC1F265●●**
200	*300*	**ATV61HC22N4**	**NSX630● Micrologic 1.3M**	500	3000	**LC1F400●●**
220	*350*	**ATV61HC22N4**	**NSX630● Micrologic 1.3M**	500	3000	**LC1F400●●**
250	*400*	**ATV61HC25N4**	**NSX630● Micrologic 1.3M**	500	3000	**LC1F500●●**
280	*450*	**ATV61HC31N4**	**NSX630● Micrologic 1.3M**	500	3000	**LC1F500●●**
315	*500*	**ATV61HC31N4**	**NS800L Micrologic 2 or 5 (LR OFF)**	800	1600	**LC1F630●●**
355	–	**ATV61HC40N4**	**NS800L Micrologic 2 or 5 (LR OFF)**	800	1600	**LC1F630●●**
400	*600*	**ATV61HC40N4**	**NS800L Micrologic 2 or 5 (LR OFF)**	800	1600	**LC1F780●●**
500	*700*	**ATV61HC50N4**	**NS1000L Micrologic 2 or 5 (LR OFF)**	1000	2000	**LC1F780●●**
560	*800*	**ATV61HC63N4**	**NS1000L Micrologic 2 or 5 (LR OFF)**	1000	2000	**LC1F780●●**
630	*900*	**ATV61HC63N4**	**NS1000L Micrologic 2 or 5 (LR OFF)**	1000	2000	**LC1F780●●**

(1) Standard power ratings for 400 V 50/60 Hz 4-pole motors.
The values expressed in HP conform to the NEC (National Electrical Code).
(2) For references to be completed, replace the dot with the letter corresponding to the circuit-breaker breaking performance (B, F, N, H, S or L).
Breaking capacity of circuit-breakers according to standard IEC 60947-2:

Circuit-breaker	Icu (kA) for 440 V	B	F	N	H	S	L
GV2L08…GV2L14 *(3)*	130	–	–	–	–	–	–
GV2L14 *(3)***…L20**	20	–	–	–	–	–	–
GV3L25…L65	50	–	–	–	–	–	–
NS80HMA	65	–	–	–	–	–	–
NSX100●MA… NSX250●MA	–	20	35	50	65	90	130
NSX400●MA…NSX630●MA	–	–	30	42	65	90	130
NS800L Micrologic 2 or 5 **NS1000L Micrologic 2 or 5**	–	–	–	–	–	–	130

(3) GV2L14: Icu of 130 when combined with an ATV61HU22N4, Icu of 20 when combined with an ATV61HU30N4.
(4) Composition of contactors:
LC1D25 to LC1D115: 3 poles + 1 N/O auxiliary contact and 1 N/C auxiliary contact.
LC1F185 to LC1F780: 3 poles. To add auxiliary contacts or other accessories, please refer to the "Motor-starter solutions - Control and protection components" catalogue.
(5) Replace ●● with the control circuit voltage reference given in the table below:

	Volts ∿	24	48	110	220	230	240
LC1D25…D115	50 Hz	**B5**	**E5**	**F5**	**M5**	**P5**	**U5**
	60 Hz	**B6**	**E6**	**F6**	**M6**	**–**	**U6**
	50/60 Hz	**B7**	**E7**	**F7**	**M7**	**P7**	**U7**
LC1F185	50 Hz (LX1 coil)	**B5**	**E5**	**F5**	**M5**	**P5**	**U5**
	60 Hz (LX1 coil)	**–**	**E6**	**F6**	**M6**	**–**	**U6**
	40…400 Hz (LX9 coil)	**–**	**E7**	**F7**	**M7**	**P7**	**U7**
LC1F265	40…400 Hz (LX1 coil)	**B7**	**E7**	**F7**	**M7**	**P7**	**U7**
LC1F400…F630	40…400 Hz (LX1 coil)	**–**	**E7**	**F7**	**M7**	**P7**	**U7**
LC1F780	40…400 Hz (LX1 coil)	**–**	**–**	**F7**	**M7**	**P7**	**U7**

For other voltages available between 24 V and 660 V, or a DC control circuit, please contact our Customer Care Centre.

Variable speed drives

Altivar 61

Motor starters: 440…480 V supply voltage

PF095316

+

DPF526158

+

PF107883SE

NSX160●MA150
+
LC1D115●●
+
ATV61HD55N4

Motor starters for IP 20 drives

Motor Power *(1)* kW	HP	Drive Reference	Circuit-breaker Reference *(2)*	Rating A	Irm A	Line contactor Reference *(4) (5)*
Three-phase supply voltage: 440…480 V 50/60 Hz. Type 1 coordination						
0.75	*1*	**ATV61H075N4**	**GV2L08**	4	–	**LC1D09●●**
1.5	*2*	**ATV61HU15N4**	**GV2L10**	6.3	–	**LC1D09●●**
2.2	*3*	**ATV61HU22N4**	**GV2L14**	10	–	**LC1D09●●**
3	–	**ATV61HU30N4**	**GV2L14**	10	–	**LC1D09●●**
4	*5*	**ATV61HU40N4**	**GV2L16**	14	–	**LC1D09●●**
5.5	*7.5*	**ATV61HU55N4**	**GV2L20**	18	–	**LC1D09●●**
7.5	*10*	**ATV61HU75N4**	**GV3L25**	25	–	**LC1D25●●**
11	*15*	**ATV61HD11N4**	**GV3L32**	32	–	**LC1D32●●**
15	*20*	**ATV61HD15N4**	**GV3L50**	50	–	**LC1D40A●●**
18.5	*25*	**ATV61HD18N4**	**GV3L50**	50	–	**LC1D40A●●**
22	*30*	**ATV61HD22N4**	**GV3L50**	50	–	**LC1D50A●●**
30	*40*	**ATV61HD30N4**	**GV3L65**	65	–	**LC1D65A●●**
37	*50*	**ATV61HD37N4**	**NS80HMA80**	80	480	**LC1D80●●**
45	*60*	**ATV61HD45N4**	**NSX100●MA100**	100	600	**LC1D95●●**
55	*75*	**ATV61HD55N4**	**NSX160●MA150**	150	1350	**LC1D115●●**
75	*100*	**ATV61HD75N4**	**NSX250●MA220**	220	1980	**LC1D115●●**
90	*125*	**ATV61HD90N4**	**NSX250●MA220**	220	1980	**LC1D150●●**
110	*150*	**ATV61HC11N4**	**NSX250●MA220**	220	1980	**LC1D150●●**
132	*200*	**ATV61HC13N4**	**NSX250●MA220**	220	1980	**LC1F225●●**
160	*250*	**ATV61HC16N4**	**NSX400● Micrologic 1.3M**	320	1920	**LC1F225●●**
200	*300*	**ATV61HC22N4**	**NSX630● Micrologic 1.3M**	500	3000	**LC1F330●●**
220	*350*	**ATV61HC22N4**	**NSX630● Micrologic 1.3M**	500	3000	**LC1F330●●**
250	*400*	**ATV61HC25N4**	**NSX630● Micrologic 1.3M**	500	3000	**LC1F400●●**
280	*450*	**ATV61HC31N4**	**NSX630● Micrologic 1.3M**	500	3000	**LC1F500●●**
315	*500*	**ATV61HC31N4**	**NS800L Micrologic 2 or 5 (LR OFF)**	800	1600	**LC1F500●●**
355	–	**ATV61HC40N4**	**NS800L Micrologic 2 or 5 (LR OFF)**	800	1600	**LC1F630●●**
400	*600*	**ATV61HC40N4**	**NS800L Micrologic 2 or 5 (LR OFF)**	800	1600	**LC1F630●●**
500	*700*	**ATV61HC50N4**	**NS1000L Micrologic 2 or 5 (LR OFF)**	800	1600	**LC1F630●●**
560	*800*	**ATV61HC63N4**	**NS1000L Micrologic 2 or 5 (LR OFF)**	1000	2000	**LC1F630●●**
630	*900*	**ATV61HC63N4**	**NS1000L Micrologic 2 or 5 (LR OFF)**	1000	2000	**LC1F630●●**

(1) Standard power ratings for 400 V 50/60 Hz 4-pole motors.
The values expressed in HP conform to the NEC (National Electrical Code).
(2) For references to be completed, replace the dot with the letter corresponding to the circuit-breaker breaking performance (B, F, N, H, S or L).
Breaking capacity of circuit-breakers according to standard IEC 60947-2:

Circuit-breaker	Icu (kA) for 440 V	B	F	N	H	S	L
GV2L08…L14 *(3)*	130	–	–	–	–	–	–
GV2L14 *(3)***…L20**	20	–	–	–	–	–	–
GV3L25…L65	50	–	–	–	–	–	–
NS80HMA	65	–	–	–	–	–	–
NSX100●MA … NSX250●MA	–	20	35	50	65	90	130
NSX400●, NSX630●	–	–	30	42	65	90	130
NS800L Micrologic 2 or 5 **NS1000L Micrologic 2 or 5**	–	–	–	–	–	–	130

(3) GV2L14: Icu of 130 when combined with an ATV61HU22N4, Icu of 20 when combined with an ATV61HU30N4.
(4) Composition of contactors:
LC1D09 to LC1D150: 3 poles + 1 N/O auxiliary contact and 1 N/C auxiliary contact.
LC1F225 to LC1F630: 3 poles. To add auxiliary contacts or other accessories, please refer to the "Motor-starter solutions - Control and protection components" catalogue.
(5) Replace ●● with the control circuit voltage reference given in the table below:

	Volts ∿	24	48	110	220	230	240
LC1D09…D150	50 Hz	**B5**	**E5**	**F5**	**M5**	**P5**	**U5**
	60 Hz	**B6**	**E6**	**F6**	**M6**	**–**	**U6**
	50/60 Hz	**B7**	**E7**	**F7**	**M7**	**P7**	**U7**
LC1F265, LC1F330	40…400 Hz (LX1 coil)	**B7**	**E7**	**F7**	**M7**	**P7**	**U7**
LC1F400…F630	40…400 Hz (LX1 coil)	**–**	**E7**	**F7**	**M7**	**P7**	**U7**

For other voltages available between 24 V and 660 V, or a DC control circuit, please contact our Customer Care Centre.

Variable speed drives: page 1/16
Options: page 1/46
Drive/option combinations: page 1/34

Variable speed drives

Altivar 61

Motor starters: 440…480 V supply voltage

PF095316

+

DF526158

+

PF107492SE

NSX100●MA150
+
LC1D115●●
+
ATV61WD55N4

Motor starters for IP 54 drives

Motor Power (1) kW	HP	Drive Reference	Circuit-breaker Reference (2)	Rating A	Irm A	Line contactor Reference (4) (5)
Three-phase supply voltage: 440…480 V 50/60 Hz. Type 2 coordination						
0.75	1	ATV61W075N4 ATV61W075N4C	GV2L07	2.5	–	LC1D09●●
1.5	2	ATV61WU15N4 ATV61WU15N4C	GV2L08	4	–	LC1D09●●
2.2	3	ATV61WU22N4 ATV61WU22N4C	GV2L10	6.3	–	LC1D09●●
3	–	ATV61WU30N4 ATV61WU30N4C	GV2L10	6.3	–	LC1D09●●
4	5	ATV61WU40N4 ATV61WU40N4C	GV2L14	10	–	LC1D25●●
5.5	7.5	ATV61WU55N4 ATV61WU55N4C	GV2L14	10	–	LC1D25●●
7.5	10	ATV61WU75N4 ATV61WU75N4C	GV3L32	32	–	LC1D40A●●
11	15	ATV61WD11N4 ATV61WD11N4C	GV3L40	40	–	LC1D40A●●
15	20	ATV61WD15N4 ATV61WD15N4C	GV3L50	50	–	LC1D50A●●
18.5	25	ATV61WD18N4 ATV61WD18N4C	GV3L50	50	–	LC1D50A●●
22	30	ATV61WD22N4 ATV61WD22N4C	GV3L65	65	–	LC1D65A●●
30	40	ATV61WD30N4 ATV61WD30N4C	NS80HMA50	50	300	LC1D80●●
37	50	ATV61WD37N4 ATV61WD37N4C	NS80HMA80	80	480	LC1D80●●
45	60	ATV61WD45N4 ATV61WD45N4C	NS80HMA80	80	480	LC1D80●●
55	75	ATV61WD55N4 ATV61WD55N4C	NSX100●MA100	100	600	LC1D115●●
75	100	ATV61WD75N4 ATV61WD75N4C	NSX160●MA150	150	1350	LC1D150●●
90	125	ATV61WD90N4 ATV61WD90N4C	NSX250●MA220	220	1980	LC1F185●●

(1) Standard power ratings for 400 V 50/60 Hz 4-pole motors.
The values expressed in HP conform to the NEC (National Electrical Code).
(2) For references to be completed, replace the dot with the letter corresponding to the circuit-breaker breaking performance (B, F, N, H, S or L).
Breaking capacity of circuit-breakers according to standard IEC 60947-2:

Circuit-breaker	Icu (kA) for 440 V	B	F	N	H	S	L
GV2L07…L14 *(3)*	130	–	–	–	–	–	–
GV2L14 *(3)* **GV3L32…L65**	50	–	–	–	–	–	–
NS80HMA	70	–	–	–	–	–	–
NSX100●MA… NSX250●MA	–	20	35	50	65	90	130

(3) GV2L14: Icu of 130 when combined with an ATV61WU40N4, Icu of 50 when combined with an ATV61WU55N4.
(4) Composition of contactors:
LC1D09 to LC1D150: 3 poles + 1 N/O auxiliary contact and 1 N/C auxiliary contact.
LC1F185: 3 poles. To add auxiliary contacts or other accessories, please refer to the "Motor-starter solutions - Control and protection components" catalogue.
(5) Replace ●● with the control circuit voltage reference given in the table below:

	Volts ∼	24	48	110	220	230	240
LC1D09…D150	50 Hz	B5	E5	F5	M5	P5	U5
	60 Hz	B6	E6	F6	M6	–	U6
	50/60 Hz	B7	E7	F7	M7	P7	U7
LC1F185	50 Hz (LX1 coil)	B5	E5	F5	M5	P5	U5
	60 Hz (LX1 coil)	–	E6	F6	M6	–	U6
	40…400 Hz (LX9 coil)	–	E7	F7	M7	P7	U7

For other voltages available between 24 V and 660 V, or a DC control circuit, please contact our Customer Care Centre.

Variable speed drives: page 1/16
Options: page 1/46
Drive/option combinations: page 1/34

Schneider Electric

Variable speed drives

Altivar 61

Motor starters: 440…480 V supply voltage

PB101591_SE

+

DF526157

+

PF107492SE

NS80HMA80
+
LC1D80●●
+
ATV61WD45N4

Motor starters for IP 54 drives

Motor Power *(1)* kW	HP	Drive Reference	Circuit-breaker Reference *(2)*	Rating A	Irm A	Line contactor Reference *(4) (5)*
Three-phase supply voltage: 440…480 V 50/60 Hz. Type 1 coordination						
0.75	*1*	**ATV61W075N4** **ATV61W075N4C**	**GV2L07**	2.5	–	**LC1D09●●**
1.5	*2*	**ATV61WU15N4** **ATV61WU15N4C**	**GV2L08**	4	–	**LC1D09●●**
2.2	*3*	**ATV61WU22N4** **ATV61WU22N4C**	**GV2L10**	6.3	–	**LC1D09●●**
3	–	**ATV61WU30N4** **ATV61WU30N4C**	**GV2L10**	6.3	–	**LC1D09●●**
4	*5*	**ATV61WU40N4** **ATV61WU40N4C**	**GV2L14**	10	–	**LC1D18●●**
5.5	*7.5*	**ATV61WU55N4** **ATV61WU55N4C**	**GV2L14**	10	–	**LC1D18●●**
7.5	*10*	**ATV61WU75N4** **ATV61WU75N4C**	**GV3L32**	32	–	**LC1D25●●**
11	*15*	**ATV61WD11N4** **ATV61WD11N4C**	**GV3L40**	40	–	**LC1D40A●●**
15	*20*	**ATV61WD15N4** **ATV61WD15N4C**	**GV3L50**	50	–	**LC1D50A●●**
18.5	*25*	**ATV61WD18N4** **ATV61WD18N4C**	**GV3L50**	50	–	**LC1D50A●●**
22	*30*	**ATV61WD22N4** **ATV61WD22N4C**	**GV3L65**	65	–	**LC1D65A●●**
30	*40*	**ATV61WD30N4** **ATV61WD30N4C**	**NS80HMA50**	50	300	**LC1D65A●●**
37	*50*	**ATV61WD37N4** **ATV61WD37N4C**	**NS80HMA80**	80	480	**LC1D65A●●**
45	*60*	**ATV61WD45N4** **ATV61WD45N4C**	**NS80HMA80**	80	480	**LC1D80●●**
55	*75*	**ATV61WD55N4** **ATV61WD55N4C**	**NSX100●MA100**	100	600	**LC1D115●●**
75	*100*	**ATV61WD75N4** **ATV61WD75N4C**	**NSX160●MA150**	150	1350	**LC1D150●●**
90	*125*	**ATV61WD90N4** **ATV61WD90N4C**	**NSX250●MA220**	220	1980	**LC1F185●●**

(1) Standard power ratings for 400 V 50/60 Hz 4-pole motors.
The values expressed in HP conform to the NEC (National Electrical Code).
(2) For references to be completed, replace the dot with the letter corresponding to the circuit-breaker breaking performance (B, F, N, H, S or L).
Breaking capacity of circuit-breakers according to standard IEC 60947-2:

Circuit-breaker	Icu (kA) for 440 V	B	F	N	H	S	L
GV2L07…L14 *(3)*	130	–	–	–	–	–	–
GV2L14 *(3)* **GV3L32…L65**	50	–	–	–	–	–	–
NS80HMA	70	–	–	–	–	–	–
NSX100●MA… NSX250●MA	–	20	35	50	65	90	130

(3) GV2L14: Icu of 130 when combined with an ATV61WU40N4 (C) and Icu of 50 when combined with an ATV61WU55N4 (C).
(4) Composition of contactors:
LC1D09 to LC1D150: 3 poles + 1 N/O auxiliary contact and 1 N/C auxiliary contact.
LC1F185: 3 poles. To add auxiliary contacts or other accessories, please refer to the "Motor-starter solutions - Control and protection components" catalogue.
(5) Replace ●● with the control circuit voltage reference given in the table below:

	Volts ∿	24	48	110	220	230	240
LC1D09…D150	50 Hz	**B5**	**E5**	**F5**	**M5**	**P5**	**U5**
	60 Hz	**B6**	**E6**	**F6**	**M6**	**–**	**U6**
	50/60 Hz	**B7**	**E7**	**F7**	**M7**	**P7**	**U7**
LC1F185	50 Hz (LX1 coil)	**B5**	**E5**	**F5**	**M5**	**P5**	**U5**
	60 Hz (LX1 coil)	**–**	**E6**	**F6**	**M6**	**–**	**U6**
	40…400 Hz (LX9 coil)	**–**	**E7**	**F7**	**M7**	**P7**	**U7**

For other voltages available between 24 V and 660 V, or a DC control circuit, please contact our Customer Care Centre.

Variable speed drives: page 1/16
Options: page 1/46
Drive/option combinations: page 1/34

Variable speed drives

Altivar 61

Motor starters: 690 V supply voltage

DF526131

+

DF526156

+

PF107582SE

GV2L20
+
LC1D40A●●
+
ATV61HD11Y

Motor starters for IP 20 drives

Motor Power *(1)* kW	Drive Reference	Circuit-breaker Reference *(2)*	Rating A	Irm A	Line contactor Reference *(3) (4)*
Three-phase supply voltage: 690 V 50/60 Hz. Type 2 coordination					
3	**ATV61HU30Y**	**GV2L10**	6.3	–	**LC1D25●●**
4	**ATV61HU40Y**	**GV2L14**	10	–	**LC1D25●●**
5.5	**ATV61HU55Y**	**GV2L14**	10	–	**LC1D25●●**
7.5	**ATV61HU75Y**	**GV2L16**	14	–	**LC1D25●●**
11	**ATV61HD11Y**	**GV2L20**	18	–	**LC1D40A●●**
15	**ATV61HD15Y**	**GV2L22**	25	–	**LC1D40A●●**
18.5	**ATV61HD18Y**	**GV3L25**	25	–	**LC1D40A●●**
22	**ATV61HD22Y**	**GV3L32**	32	–	**LC1D65A●●**
30	**ATV61HD30Y**	**GV3L40**	40	–	**LC1D80●●**
37	**ATV61HD37Y**	**GV3L50**	50	–	**LC1D80●●**
45	**ATV61HD45Y**	**GV3L65**	65	–	**LC1D115●●**
55	**ATV61HD55Y**	**NS100LMA100**	100	1100	**LC1D115●●**
75	**ATV61HD75Y**	**NS100LMA100**	100	1100	**LC1D115●●**
90	**ATV61HD90Y**	**NS400LMA320**	320	2880	**LC1F265●●**
110	**ATV61HC11Y**	**NS400LMA320**	320	2880	**LC1F265●●**
132	**ATV61HC13Y**	**NS400LMA320**	320	2880	**LC1F265●●**
160	**ATV61HC16Y**	**NS400LMA320**	320	2880	**LC1F265●●**
200	**ATV61HC20Y**	**NS400LMA320**	320	2880	**LC1F330●●**
250	**ATV61HC25Y**	**NS630bLB Micrologic 2 or 5 (LR OFF)**	630	2880	**LC1F630●●**
315	**ATV61HC31Y**	**NS630bLB Micrologic 2 or 5 (LR OFF)**	630	4500	**LC1F630●●**
400	**ATV61HC40Y**	**NS630bLB Micrologic 2 or 5 (LR OFF)**	630	4500	**LC1F630●●**
500	**ATV61HC50Y**	**NS630bLB Micrologic 2 or 5 (LR OFF)**	630	4500	**LC1F630●●**
630	**ATV61HC63Y**	**NS800LB Micrologic 2 or 5 (LR OFF)**	800	5670	**LC1F780●●**

(1) Standard power ratings for 690 V 50 Hz 4-pole motors.
(2) Breaking capacity of circuit-breakers according to standard IEC 60947-2:

Circuit-breaker	Icu (kA) for 690 V
GV2L10…L22 **GV3L25, GV3L32**	4
GV3L40…L65	5
NS●●●LMA **NS630bLB Micrologic 2 or 5** **NS800LB Micrologic 2 or 5**	75

(3) Composition of contactors:
LC1D25 to LC1D115: 3 poles + 1 N/O auxiliary contact and 1 N/C auxiliary contact.
LC1F265 to LC1F780: 3 poles. To add auxiliary contacts or other accessories, please refer to the "Motor-starter solutions - Control and protection components" catalogue.
(4) Replace ●● with the control circuit voltage reference given in the table below:

	Volts ∿	24	48	110	220	230	240
LC1D25…D115	50 Hz	**B5**	**E5**	**F5**	**M5**	**P5**	**U5**
	60 Hz	**B6**	**E6**	**F6**	**M6**	**–**	**U6**
	50/60 Hz	**B7**	**E7**	**F7**	**M7**	**P7**	**U7**
LC1F265, LC1F330	40…400 Hz (LX1 coil)	**B7**	**E7**	**F7**	**M7**	**P7**	**U7**
LC1F630	40…400 Hz (LX1 coil)	**–**	**E7**	**F7**	**M7**	**P7**	**U7**
LC1F780	40…400 Hz (LX1 coil)	**–**	**–**	**F7**	**M7**	**P7**	**U7**

For other voltages available between 24 V and 660 V, or a DC control circuit, please contact our Customer Care Centre.

Variable speed drives: page 1/16
Options: page 1/46
Drive/option combinations: page 1/34

Schneider Electric

Variable speed drives

Altivar 61

Motor starters: 690 V supply voltage

PF103273

+

DF526089

+

PF107586SE

NSX630LMA500
+
LC1F400●●
+
ATV61HC25Y

Motor starters for IP 20 drives

Motor Power *(1)* kW	Drive Reference	Circuit-breaker Reference *(2)*	Rating A	Irm A	Line contactor Reference *(3) (4)*
Three-phase supply voltage: 690 V 50/60 Hz. Type 1 coordination					
250	**ATV61HC25Y**	**NS630bLB Micrologic 2 or 5 (LR OFF)**	630	–	**LC1F400●●**
315	**ATV61HC31Y**	**NS630bLB Micrologic 2 or 5 (LR OFF)**	630	–	**LC1F500●●**
400	**ATV61HC40Y**	**NS630bLB Micrologic 2 or 5 (LR OFF)**	630	–	**LC1F630●●**
500	**ATV61HC50Y**	**NS630bLB Micrologic 2 or 5 (LR OFF)**	630	–	**LC1BL33●●**
630	**ATV61HC63Y**	**NS800LB Micrologic 5 (LR OFF)**	800	–	**LC1BL34●●**

(1) Standard power ratings for 690 V 50 Hz 4-pole motors.
(2) Breaking capacity of circuit-breakers according to standard IEC 60947-2:

Circuit-breaker	Icu (kA) for 690 V
NS630bLB Micrologic 2 or 5 **NS800LB Micrologic 5**	75

(3) Composition of contactors:
LC1F400 to LC1F630, LC1BL3●: 3 poles. To add auxiliary contacts or other accessories, please refer to the "Motor-starter solutions - Control and protection components" catalogue.
(4) Replace ●● with the control circuit voltage reference given in the table below:

	Volts ∿	24	48	110	220	230	240
LC1F●●●	40…400 Hz (LX1 coil)	–	E7	F7	M7	P7	U7
LC1BL●●	50…400 Hz (WB1 coil)	–	–	F	M	D	U

For other voltages available between 24 V and 660 V, or a DC control circuit, please contact our Customer Care Centre.

Variable speed drives: page 1/16
Options: page 1/46
Drive/option combinations: page 1/34

2

Contents

2 - Altivar 61 Plus variable speed drives

■ **Altivar 61 Plus variable speed drives** ..... ***page 2/2***

□ Pre-equipped IP 54 floor-standing enclosure kit ..... *page 2/2*

□ “Ready to use” IP 54 floor-standing enclosure ..... *page 2/4*

□ “Ready to use” IP 23 or IP 54 floor-standing enclosure with harmonic filtering ..... *page 2/6*

□ IP 23 or IP 54 floor-standing enclosure with separate air flows..... *page 2/8*

□ IP 23 or IP 54 floor-standing enclosure (compact version) ..... *page 2/12*

□ Options ..... *page 2/16*

■ **Product reference index**..... ***page 3/0***

2

Variable speed drives
Altivar 61
Pre-equipped IP 54 floor-standing enclosure kit

PF107555SE

IP 54 floor-standing enclosure kit

Presentation

The pre-equipped kit solution is used to create an IP 54 certified floor-standing enclosure for 110 kW to 630 kW IP 20 Altivar 61 variable speed drives for a 380…480 V three-phase supply voltage.

This kit has been designed to:
- ■ Reduce the setup time with:
- □ Simplified assembly
- □ Optimized thermal and mechanical dimensioning

The cooling systems used enable the equipment to be installed in difficult and dusty environments.

The temperature must not exceed + 45°C outside the enclosure or + 50°C inside the enclosure; the temperature is monitored by a thermostat which can shut down the equipment if these limits are exceeded.

DF600349

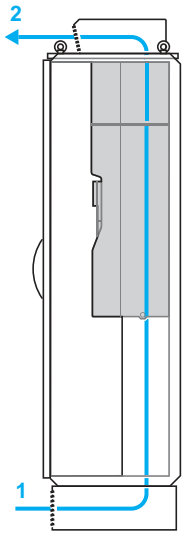

Cooling system with a single air circuit

Cooling systems

There are two types of cooling, depending on the model:
- ■ **VW3A9541 and VW3A9542** enclosure kits with a single air circuit for the power section:
- □ Air inlet via the plinth 1
- □ Air outlet on the enclosure roof 2

- ■ **VW3A9543…548** enclosure kits with three separate air circuits:
- □ One for the power section:
  - Air inlet via the plinth 1
  - Air outlet on the enclosure roof 2

- □ Two for the control section with cooling system using an air/air exchanger:
  - External air circuit 3 for cooling the heat exchanger 5
  - Internal air circuit 4 cooled by the heat exchanger 5

This system makes it possible to isolate the air circulating in the power section from the control section, thereby helping ensure better protection against the entry of contaminants (in hostile and dusty environments).

DF600350

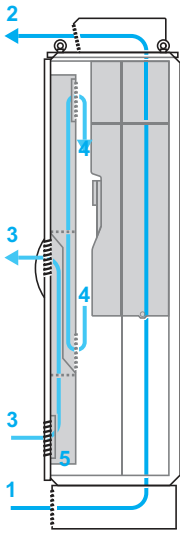

Cooling system with three separate air circuits

Options

There are two additional 600 and 800 mm empty enclosure kits **VW3A955●** for adding accessories or options.

The additional empty enclosure kit must be installed on the left side of the pre-equipped IP 54 enclosure kit. In this case, the left-hand panel of the pre-equipped IP 54 enclosure kit is mounted on the left side of the additional empty enclosure kit, which is supplied without side panels.

Variable speed drives

Altivar 61

Pre-equipped IP 54 floor-standing enclosure kit

Description

The kit consists of:

- Air/air heat exchanger (except for enclosure kits **VW3A9541** or **VW3A9542**) 1
- IP 65 graphic display terminal remote mounting kit 2
- Handle with a pushbutton-operated opening mechanism 3
- Document holder 4
- Plinth 5
- Lower air duct 6
- EMC plate 7
- Drive support rack 8
- Roof extension 9
- Upper air duct
- 24 V ⎓ 600 mA supplementary power supply
- Fixing accessories, seals
- Technical documentation containing parts lists, electrical diagrams and mechanical assembly drawings

References

Description	For use with	Dimensions	Reference	Weight
		W x H x D		kg
Pre-equipped IP 54 floor-standing enclosure kit	ATV61HC11N4 *(1)* ATV61HD90N4 *(1)*	600 x 2362 x 642	**VW3A9541**	220.000
	ATV61HC13N4 *(1)*	600 x 2362 x 642	**VW3A9542**	220.000
	ATV61HC16N4 *(1)*	600 x 2362 x 642	**VW3A9543**	252.000
	ATV61HC22N4 *(1)*	600 x 2362 x 642	**VW3A9544**	252.000
	ATV61HC25N4 *(1)* without braking unit ATV61HC31N4 *(1)* without braking unit	800 x 2362 x 642	**VW3A9545**	300.000
	ATV61HC25N4 *(1)* with braking unit VW3A7101 *(2)* ATV61HC31N4 *(1)* with braking unit VW3A7101 *(2)*	800 x 2362 x 642	**VW3A9546**	300.000
	ATV61HC40N4 *(1)* without braking unit ATV61HC50N4 *(1)* without braking unit	1000 x 2362 x 642	**VW3A9547**	360.000
	ATV61HC63N4 *(1)* without braking unit	1200 x 2362 x 642	**VW3A9548**	470.000
	VW3A7102 braking unit	600 x 2362 x 642	**VW3A9549** *(3)*	252.000
Additional empty enclosure kit 600 mm	Options and accessories *(4)*	600 x 2209 x 642	**VW3A9550**	200.000
Additional empty enclosure kit 800 mm	Options and accessories *(4)*	800 x 2209 x 642	**VW3A9551**	210.000

(1) Drive to be ordered separately (see page 1/17).
(2) Braking unit for drives ATV61HC25N4, HC31N4, to be ordered separately (see page 1/60).
(3) Enclosure kit VW3A9549 is designed to take braking unit VW3A7102 for high-power drives ATV61HC40N4…HC63N4; it is mounted on the left of enclosure kit VW3A9547 or VW3A9548. The braking unit must be ordered separately (see page 1/60).
(4) For any additional information, please contact our Customer Care Centre.

Variable speed drives

Altivar 61 Plus

“Ready to use” IP 54 floor-standing enclosure

PF095305

“Ready to use” IP 54 floor-standing enclosure

Presentation

Altivar 61 variable speed drives can also be supplied in a “ready to use” IP 54 certified floor-standing enclosure, which makes it possible to achieve an IP 54 degree of protection for IP 20 Altivar 61 drives.

The range has been designed to offer a simple and economical “ready to use”solution, with setup time reduced to a minimum. The enclosures are supplied ready-assembled and ready to connect, making wiring fast and easy.

This standardized version enables the equipment to be made available very quickly.

It covers motor power ratings from 90 kW to 630 kW for a 380…415 V three-phase supply.

DF600351

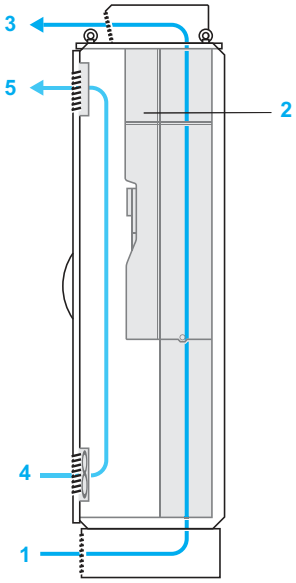

Cooling system with two separate air circuits

Cooling system

The cooling system used helps ensure optimum ventilation of the equipment, even in difficult and dusty environments.

Cooling is provided by two separate air circuits:

- One for the power section:
  - Air entry via an intake grille on the plinth 1
  - Air outlet via a metal cover with protection against water splashes on the enclosure roof 3
- One for the control section:
  - Air entry via an intake grille with fan (fitted with a filter) on the enclosure door 4
  - Air outlet through a filter 5

The incoming air temperature must be 0…+ 40°C.
The temperature is monitored by a thermostat which can shut down the equipment.

Variable speed drives: page 1/16
Options: page 1/46
Drive/option combinations: page 1/34

Variable speed drives

Altivar 61 Plus

“Ready to use” IP 54 floor-standing enclosure

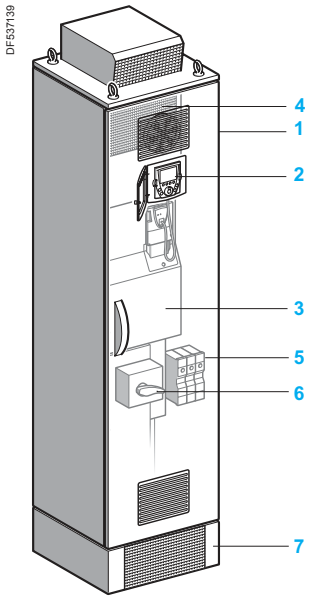

Description

The offer comprises:

- A wired, ready-assembled Sarel “Spacial SF” enclosure 1
- A drive on heatsink ATV61HD90N4…HC63N4 3
- An IP 65 remote mounting kit for graphic display terminal 2
- A DC choke 4
- Motor terminals 5
- A magnetic circuit-breaker 6
- A plinth 7

References

Degree of protection	Motor Power indicated on rating plate *(1)*	With drive	Dimensions	Reference	Weight
	kW		W x H x D		kg
Three-phase supply voltage 380…415 V 50/60 Hz *(2)*					
IP 54	90	ATV61HD90N4	600 x 2362 x 642	**ATV61ES5D90N4**	300.000
	110	ATV61HC11N4	600 x 2362 x 642	**ATV61ES5C11N4**	300.000
	132	ATV61HC13N4	600 x 2362 x 642	**ATV61ES5C13N4**	300.000
	160	ATV61HC16N4	600 x 2362 x 642	**ATV61ES5C16N4**	320.000
	200	ATV61HC22N4	600 x 2362 x 642	**ATV61ES5C22N4**	330.000
	220				
	250	ATV61HC25N4	800 x 2362 x 642	**ATV61ES5C25N4**	440.000
	280	ATV61HC31N4	800 x 2362 x 642	**ATV61ES5C31N4**	440.000
	315				
	355	ATV61HC40N4	1400 x 2362 x 642	**ATV61ES5C40N4**	700.000
	400				
	500	ATV61HC50N4	1400 x 2362 x 642	**ATV61ES5C50N4**	720.000
	560	ATV61HC63N4	1600 x 2362 x 642	**ATV61ES5C63N4**	850.000
	630				

(1) These values are given for a nominal switching frequency of 4 kHz for ATV61HD90N4 or 2.5 kHz for ATV61HC11N4…HC63N4 drives for use in continuous operation.
The switching frequency is adjustable from 2…8 kHz forATV61HD90N4…ATV61HC63N4 drives.
Above 2.5, 4 or 12 kHz, depending on the rating, the drive will reduce the switching frequency automatically in the event of an excessive temperature rise. For continuous operation above the nominal switching frequency, derate the nominal drive current, see derating curves on our website www.schneider-electric.com.

(2) The maximum prospective line Isc is of 50 kA. These values are given for use with upstream fuses (see the characteristics on our website www.schneider-electric.com).

Variable speed drives:
page 1/16

Options:
page 1/46

Drive/option combinations:
page 1/34

Variable speed drives

Altivar 61 Plus - LH

“Ready to use” IP 23 or IP 54 floor-standing enclosure with harmonic filtering

“Ready to use” IP 23 or IP 54 floor-standing enclosure with harmonic filtering

Presentation

The Altivar 61 Plus - LH (Low Harmonic) offer has been designed with harmonic filtering to suit applications requiring a very low harmonic level (THDI ⩽ 5 %).
They comply with the conditions imposed by standard IEEE 519 - 1992.

Altivar 61 Plus - LH drives are supplied in an IP 23 or IP 54 certified floor-standing enclosure, which makes it possible to achieve an IP 23 or IP 54 degree of protection for IP 20 Altivar 61 drives.

The enclosures are supplied ready-assembled and ready to connect, thus offering a simple and economical “ready to use” solution which keeps setup time to a minimum. Wiring is fast and easy, the setup parameters are factory-set.
Thanks to this “ready to use” solution the standard offer is available very quickly.

The standard offer is supplemented by a wide selection of options depending on the drive rating (see pages 2/18 to 2/23).

The offer covers motor power ratings from 55 kW to 630 kW for a 380…415 V, 50/60 Hz three-phase supply voltage and from 800 kW to 2400 kW for a 690 V, 50/60 Hz three-phase supply voltage.

The incoming air temperature must be between 0 and + 40°C.
The internal temperature is monitored by a thermostat which can shut down the equipment.

DF600774

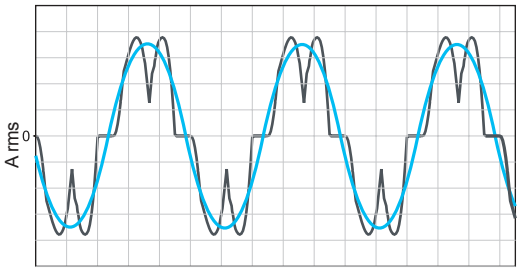

Harmonic level without harmonic filtering (THDI ~ 48 %)
Harmonic level with harmonic filtering (THDI ⩽ 5 %)

Harmonic filtering

The harmonic filtering system is used to keep the harmonic level to less than 5 %.
Its design optimizes motor efficiency and reduces energy consumption by significantly decreasing harmonic distortions.

It also offers the following advantages:
- Maximum motor power maintained in the event of a weak line supply by boosted DC voltage
- Power factor (cos Phi ~ 1) independent of load or of return energy
- Reduction in drive electromagnetic emissions in accordance with standard IEC/EN 61800-3 category C3 due to the integrated filter
- Configurable energy recovery onto the line supply, for example for an installation with diesel generator
- Line supply short-circuits tolerated up to 100 kA

Variable speed drives: page 1/16
Options: page 1/46
Drive/option combinations: page 1/34

Variable speed drives

Altivar 61 Plus - LH

"Ready to use" IP 23 or IP 54 floor-standing enclosure with harmonic filtering

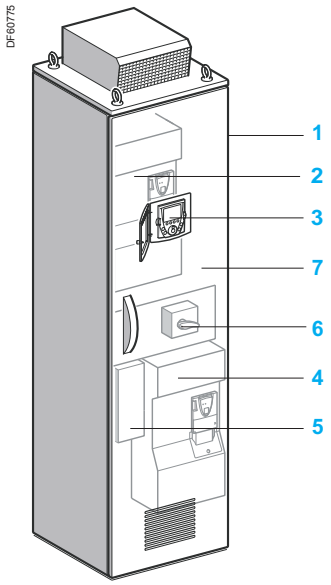

Description

The offer comprises:

- A wired, ready-assembled Sarel "Spacial SF" enclosure 1
- A built-in drive based on ATV61 technology *(1)* 2
- An IP 65 remote mounting kit for graphic display terminal 3
- An active infeed converter 4
- Filter components including EMC filter 5
- A switch, fast-acting fuses and motor terminals 6
- A slot for optional motor choke 7

References

Degree of protection	Motor Power indicated on rating plate *(2)*	With drive	Dimensions	Reference	Weight
	kW		W x H x D		kg
Three-phase supply voltage 380…415 V 50/60 Hz *(3)*					
IP 23	55	ATV61HD55N4	400 x 2157 x 642	**ATV61EXC2D55N4H**	370.000
	75	ATV61HD75N4	600 x 2157 x 642	**ATV61EXC2D75N4H**	465.000
	90	ATV61HD90N4	600 x 2157 x 642	**ATV61EXC2D90N4H**	465.000
	110	ATV61HC11N4	600 x 2157 x 642	**ATV61EXC2C11N4H**	480.000
	132	ATV61HC13N4	800 x 2157 x 642	**ATV61EXC2C13N4H**	605.000
	160	ATV61HC16N4	800 x 2157 x 642	**ATV61EXC2C16N4H**	610.000
	200 220	ATV61HC22N4	1200 x 2157 x 642	**ATV61EXC2C22N4H**	820.000
	250	ATV61HC25N4	1600 x 2157 x 642	**ATV61EXC2C25N4H**	980.000
	280 315	ATV61HC31N4	1600 x 2157 x 642	**ATV61EXC2C31N4H**	980.000
	355 400	ATV61HC40N4	2000 x 2157 x 642	**ATV61EXC2C40N4H**	1455.000
	500	ATV61HC50N4	2000 x 2157 x 642	**ATV61EXC2C50N4H**	1455.000
	560 630	ATV61HC63N4	2400 x 2157 x 642	**ATV61EXC2C63N4H**	1755.000
IP 54	55	ATV61HD55N4	400 x 2237 x 642	**ATV61EXC5D55N4H**	370.000
	75	ATV61HD75N4	600 x 2237 x 642	**ATV61EXC5D75N4H**	465.000
	90	ATV61HD90N4	600 x 2237 x 642	**ATV61EXC5D90N4H**	465.000
	110	ATV61HC11N4	600 x 2237 x 642	**ATV61EXC5C11N4H**	480.000
	132	ATV61HC13N4	800 x 2237 x 642	**ATV61EXC5C13N4H**	600.000
	160	ATV61HC16N4	800 x 2237 x 642	**ATV61EXC5C16N4H**	605.000
	200 220	ATV61HC22N4	1200 x 2237 x 642	**ATV61EXC5C22N4H**	810.000
	250	ATV61HC25N4	1600 x 2237 x 642	**ATV61EXC5C25N4H**	995.000
	280 315	ATV61HC31N4	1600 x 2237 x 642	**ATV61EXC5C31N4H**	995.000
	355 400	ATV61HC40N4	2000 x 2237 x 642	**ATV61EXC5C40N4H**	1470.000
	500	ATV61HC50N4	2000 x 2237 x 642	**ATV61EXC5C50N4H**	1480.000
	560 630	ATV61HC63N4	2400 x 2237 x 642	**ATV61EXC5C63N4H**	1770.000
Three-phase supply voltage 690 V 50/60 Hz *(3)*					
IP 23	800	ATV61EC80Y *(1)*	3800 x 2237 x 642	**ATV61EXA2C80YH**	2940.000
	1000	ATV61EM10Y *(1)*	3800 x 2237 x 642	**ATV61EXA2M10YH**	2940.000
	1200	ATV61EM12Y *(1)*	3800 x 2237 x 642	**ATV61EXA2M12YH**	2940.000
	1500	ATV61EM15Y *(1)*	7400 x 2237 x 642	**ATV61EXA2M15YH**	6060.000
	1800	ATV61EM18Y *(1)*	7400 x 2237 x 642	**ATV61EXA2M18YH**	6060.000
	2100	ATV61EM21Y *(1)*	7400 x 2237 x 642	**ATV61EXA2M21YH**	6060.000
	2400	ATV61EM24Y *(1)*	7400 x 2237 x 642	**ATV61EXA2M24YH**	6060.000
IP 54	800	ATV61EC80Y *(1)*	3800 x 2237 x 642	**ATV61EXA5C80YH**	2940.000
	1000	ATV61EM10Y *(1)*	3800 x 2237 x 642	**ATV61EXA5M10YH**	2940.000
	1200	ATV61EM12Y *(1)*	3800 x 2237 x 642	**ATV61EXA5M12YH**	2940.000
	1500	ATV61EM15Y *(1)*	7400 x 2237 x 642	**ATV61EXA5M15YH**	6060.000
	1800	ATV61EM18Y *(1)*	7400 x 2237 x 642	**ATV61EXA5M18YH**	6060.000
	2100	ATV61EM21Y *(1)*	7400 x 2237 x 642	**ATV61EXA5M21YH**	6060.000
	2400	ATV61EM24Y *(1)*	7400 x 2237 x 642	**ATV61EXA5M24YH**	6060.000

(1) Reference of the drive mounted in the enclosure; this reference cannot be ordered on its own.

(2) These values are given for a nominal switching frequency of 12 kHz up to ATV61HD75N4, 4 kHz for ATV61HD90N4 or 2.5 kHz for ATV61HC11N4…HC63N4 drives for use in continuous operation.
The switching frequency is adjustable from 1…16 kHz up to ATV61HD75N4 and from 2…8 kHz for ATV61HD90N4…ATV61HC63N4 drives.
Above 2.5, 4 or 12 kHz, depending on the rating, the drive will reduce the switching frequency automatically in the event of an excessive temperature rise. For continuous operation above the nominal switching frequency, derate the nominal drive current, see derating curves on our website www.schneider-electric.com.

(3) The maximum prospective line Isc if of 100 kA. These values are given for use with a circuit-breaker, which is available as an option, or fuses placed upstream (see the characteristics on our website www.schneider-electric.com).

Variable speed drives: page 1/16
Options: page 1/46
Drive/option combinations: page 1/34

Variable speed drives

Altivar 61 Plus

IP 23 or IP 54 floor-standing enclosure
with separate air flows

Presentation

The Altivar 61 Plus offer with separate air flows has been designed to meet requirements for harsh and highly polluted environments (such as in tunnels, subways, smoke extraction and pumping applications, etc.).

Altivar 61 variable speed drives are supplied in an IP 23 or IP 54 ready-assembled floor-standing enclosure to facilitate their installation and setup, while helping ensure optimum ventilation.

The enclosures are supplied ready to connect.

The offer comprises two versions:
■ The **ATV61EXS5●●●●●** version consists of a single enclosure providing IP 54 protection.
It covers motor power ratings from 90 kW to 800 kW with three types of power supply:
□ 380…415 V three-phase, 90 kW to 630 kW (**ATV61EXS5●●●N4**)
□ 500 V three-phase, 90 kW to 630 kW (**ATV61EXS5●●●N**)
□ 690 V three-phase, 110 kW to 800 kW (**ATV61EXS5●●●Y**)
Two separate cooling circuits for the control section and the power section help ensure optimum enclosure ventilation.

■ The **ATV61EXA●●●●●●** version consists of a set of 4 or more enclosures providing IP 23 or IP 54 protection, depending on the model.
It covers motor power ratings from 630 kW to 2400 kW with three types of power supply:
□ 380…415 V three-phase, 630 kW to 1400 kW (**ATV61EXA●●●●N4**)
□ 500 V three-phase, 630 kW to 1800 kW (**ATV61EXA●●●●N**)
□ 690 V three-phase, 800 kW to 2400 kW (**ATV61EXA●●●●Y**)
Two separate cooling circuits, one for the control section and one for the power section, also help ensure enclosure ventilation.
In addition, a water circuit is integrated in the power enclosure to help ensure excellent cooling for power electronics.

The incoming air temperature must be between 0°C and + 40°C (- 10°C and + 40°C with enclosure heater) and may reach + 50°C with derating (class 3K3 according to IEC/EN 60721-3-3).
The internal temperature is monitored by a thermostat which can shut down the equipment.

The entire range includes the choice of:
■ A standard offer
■ A modular offer, in which a wide selection of options can be incorporated depending on the drive rating

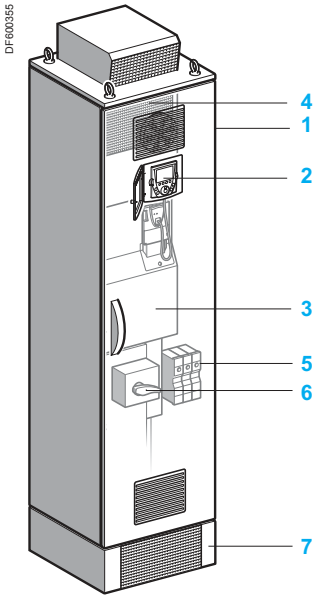

Standard ATV61EXS5●●●●● offer

The standard ATV61EXS5●●●●● offer

This consists of:

■ A wired, ready-assembled Sarel “Spacial SF” enclosure 1
■ A drive on heatsink ATV61HD90N4…HC63N4 or ATV61HC11Y…ATV61HC80Y 3
■ An IP 65 remote mounting kit for graphic display terminal 2
■ A DC choke 4 (ATV61EXS5●●●N4) or a line choke in an additional enclosure (ATV61EXS5●●●N and ATV61EXS5●●●Y)
■ Motor terminals 5
■ A switch and fast-acting fuses 6
■ A plinth 7

See pages 2/10 and 2/11.

Variable speed drives

Altivar 61 Plus

IP 23 or IP 54 floor-standing enclosure
with separate air flows

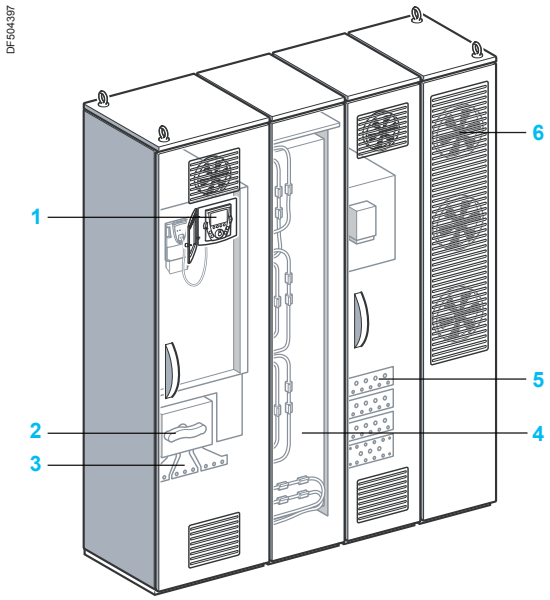

Standard ATV61EXA●●●●● offer

The standard ATV61EXA●●●●●● offer

The ATV61EXA●●●●●● offer is supplied in wired, ready-assembled Sarel "Spacial SF" enclosures.

Configuration example for a standard ATV61EXA●●●●●● offer:
- An enclosure for the power supply with an IP 65 remote mounting kit for graphic display terminal 1, a switch 2, terminals 3 and fast-acting fuses
- An enclosure for the power section cooled by an integrated water circuit 4
- An enclosure with motor connection terminals 5
- An enclosure for the power section cooling circuit with heat exchanger and fans 6

See pages 2/10 and 2/11.

Modular offer

This consists of:

- The standard separate air flow offer ATV61EXS5●●●●● or ATV61EXA●●●●●●
- One or more options (see pages 2/16 to 2/23)

As well as these specific options, the options available for Altivar 61 drives can be used, at the same rating, with the enclosed drives offer (see the summary tables of possible drive, option and accessory combinations on pages 1/36, 1/37 and 1/42 to 1/45).

For any configuration other than those shown on pages 2/16 to 2/23, please contact our Customer Care Centre.

Common options

These options can be integrated, whatever the enclosure model, without any need for modifications to the enclosure:

- Adaptor for 115 V ∿ logic inputs
- Encoder interface cards
- I/O expansion cards
- Multipump cards and "Controller Inside" programmable card
- Modbus TCP Daisy Chain, EtherNet/IP, DeviceNet, InterBus, CC-Link, Modbus/Uni-Telway, PROFIBUS DP V0 or V1, LonWorks, METASYS N2, APOGEE FLN, BACnet communication cards
- "Preventa type AC" or "Preventa type ATE" fault relay
- PTC relays, PT100 relays
- Motor heater
- Additional 24 V ⎓ power supply
- Enclosure lighting
- Emergency stop button
- Key switch (Local/Remote)
- Power supply circuit for external fan

See pages 2/16 and 2/17. For other options, please contact our Customer Care Centre.

Options dependent on the drive rating

These options depend on the drive rating. Some may lead to modification of the size of the enclosure:

- Braking unit
- Isolating handle for switch
- Circuit-breaker
- Line contactor
- Control transformer
- Ammeter
- Enclosure heater
- Motor choke
- Sinus filter
- Air conditioning

See pages 2/18 to 2/23. For other options, please contact our Customer Care Centre.

Variable speed drives

Altivar 61 Plus

IP 23 or IP 54 floor-standing enclosure
with separate air flows

PF095305

ATV61EXS5●●●●●

IP 23 or IP 54 floor-standing enclosure with separate air flows

Degree of protection	Motor Power indicated on rating plate *(2)*	With drive	Dimensions	Reference *(1)*	Weight
	kW		W x H x D		kg
Three-phase supply voltage 380…415 V 50/60 Hz					
IP 54 *(4)*	90	ATV61HD90N4	600 x 2362 x 642	**ATV61EXS5D90N4**	310.000
	110	ATV61HC11N4	600 x 2362 x 642	**ATV61EXS5C11N4**	310.000
	132	ATV61HC13N4	600 x 2362 x 642	**ATV61EXS5C13N4**	335.000
	160	ATV61HC16N4	600 x 2362 x 642	**ATV61EXS5C16N4**	345.000
	200	ATV61HC22N4	600 x 2362 x 642	**ATV61EXS5C22N4**	395.000
	220				
	250	ATV61HC25N4	800 x 2362 x 642	**ATV61EXS5C25N4**	480.000
	280	ATV61HC31N4	800 x 2362 x 642	**ATV61EXS5C31N4**	480.000
	315				
	355	ATV61HC40N4	1000 x 2362 x 642	**ATV61EXS5C40N4**	745.000
	400				
	500	ATV61HC50N4	1000 x 2362 x 642	**ATV61EXS5C50N4**	765.000
	560	ATV61HC63N4	1200 x 2362 x 642	**ATV61EXS5C63N4**	900.000
	630				
IP 23 or IP 54 *(5)*	630	ATV61EC63N4 *(3)*	1800 x 2009 x 642	**ATV61EXA●C63N4**	950.000
	710	ATV61EC71N4 *(3)*	1800 x 2009 x 642	**ATV61EXA●C71N4**	950.000
	900	ATV61EC90N4 *(3)*	3400 x 2009 x 642	**ATV61EXA●C90N4**	1825.000
	1100	ATV61EM11N4 *(3)*	3400 x 2009 x 642	**ATV61EXA●M11N4**	1825.000
	1300	ATV61EM13N4 *(3)*	3400 x 2009 x 642	**ATV61EXA●M13N4**	1825.000
	1400	ATV61EM14N4 *(3)*	3400 x 2009 x 642	**ATV61EXA●M14N4**	1825.000
Three-phase supply voltage 500 V 50/60 Hz					
IP 54 *(4)*	90	ATV61HC11Y	600 x 2362 x 642	**ATV61EXS5D90N**	446.000
	110	ATV61HC13Y	600 x 2362 x 642	**ATV61EXS5C11N**	446.000
	132	ATV61HC16Y	600 x 2362 x 642	**ATV61EXS5C13N**	497.000
	160	ATV61HC20Y	600 x 2362 x 642	**ATV61EXS5C16N**	497.000
	200	ATV61HC25Y	800 x 2362 x 642	**ATV61EXS5C20N**	573.000
	250	ATV61HC31Y	800 x 2362 x 642	**ATV61EXS5C25N**	623.000
	315	ATV61HC40Y	800 x 2362 x 642	**ATV61EXS5C31N**	623.000
	400	ATV61HC50Y	1200 x 2362 x 642	**ATV61EXS5C40N**	912.000
	500	ATV61HC63Y	1200 x 2362 x 642	**ATV61EXS5C50N**	1000.000
	630	ATV61HC80Y	1200 x 2362 x 642	**ATV61EXS5C63N**	1000.000
IP 23 or IP 54 *(5)*	630	ATV61EC80Y *(3)*	1800 x 2009 x 642	**ATV61EXA●C63N**	950.000
	800	ATV61EM10Y *(3)*	1800 x 2009 x 642	**ATV61EXA●C80N**	950.000
	900	ATV61EM12Y *(3)*	1800 x 2009 x 642	**ATV61EXA●C90N**	950.000
	1100	ATV61EM15Y *(3)*	3400 x 2009 x 642	**ATV61EXA●M11N**	1825.000
	1300	ATV61EM18Y *(3)*	3400 x 2009 x 642	**ATV61EXA●M13N**	1825.000
	1500	ATV61EM21Y *(3)*	3400 x 2009 x 642	**ATV61EXA●M15N**	1825.000
	1800	ATV61EM24Y *(3)*	3400 x 2009 x 642	**ATV61EXA●M18N**	1825.000

(1) To obtain the complete enclosure reference, replace the p with a 2 for IP 23 protection or a 5 for IP 54 protection.
Example for IP 23 protection: ATV61EXA●C63N4 becomes ATV61EXA2C63N4.
(2) These values are given for a nominal switching frequency from 2.5…4.9 kHz for ATV61HD90N4 ...HC63N4 and ATV61HC11Y…HC80Y drives. Above 2.5 kHz, 4 kHz or 12 kHz, depending on the rating, the drive will reduce the switching frequency automatically in the event of an excessive temperature rise. The switching frequency is adjustable from 2…8 kHz for ATV61HD90N4…ATV61HC63N4 drives.
For continuous operation above the nominal switching frequency, derate the nominal drive current, see derating curves on our website www.schneider-electric.com.
(3) Reference of the drive mounted in the enclosure; this reference cannot be ordered on its own.
(4) The maximum prospective line Isc is of 50 kA.These values are given for use with upstream fuses (see the characteristics on our website www.schneider-electric.com).
(5) The maximum prospective line Isc is of 100 kA.These values are given for use with upstream fuses (see the characteristics on our website www.schneider-electric.com).

Variable speed drives: page 1/16
Options: page 1/46
Drive/option combinations: page 1/34

Variable speed drives

Altivar 61 Plus

IP 23 or IP 54 floor-standing enclosure
with separate air flows

PF095306

ATV61EXA●●●●●

IP 23 or IP 54 floor-standing enclosure with separate air flows (continued)

Three-phase supply voltage 690 V 50/60 Hz

Degree of protection	Motor Power indicated on rating plate *(2)*	With drive	Dimensions	Reference *(1)*	Weight
	kW		W x H x D		kg
IP 54 *(3)*	110	ATV61HC11Y	600 x 2362 x 642	**ATV61EXS5C11Y**	446.000
	132	ATV61HC13Y	600 x 2362 x 642	**ATV61EXS5C13Y**	446.000
	160	ATV61HC16Y	600 x 2362 x 642	**ATV61EXS5C16Y**	497.000
	200	ATV61HC20Y	600 x 2362 x 642	**ATV61EXS5C20Y**	497.000
	250	ATV61HC25Y	800 x 2362 x 642	**ATV61EXS5C25Y**	573.000
	315	ATV61HC31Y	800 x 2362 x 642	**ATV61EXS5C31Y**	623.000
	400	ATV61HC40Y	800 x 2362 x 642	**ATV61EXS5C40Y**	623.000
	500	ATV61HC50Y	1200 x 2362 x 642	**ATV61EXS5C50Y**	912.000
	630	ATV61HC63Y	1200 x 2362 x 642	**ATV61EXS5C63Y**	1000.000
	800	ATV61HC80Y	1200 x 2362 x 642	**ATV61EXS5C80Y**	1000.000
IP 54 or IP 23 *(4)*	800	ATV61EC80Y *(5)*	1800 x 2009 x 642	**ATV61EXA●C80Y**	950.000
	1000	ATV61EM10Y *(5)*	1800 x 2009 x 642	**ATV61EXA●M10Y**	950.000
	1200	ATV61EM12Y *(5)*	1800 x 2009 x 642	**ATV61EXA●M12Y**	950.000
	1500	ATV61EM15Y *(5)*	3400 x 2009 x 642	**ATV61EXA●M15Y**	1825.000
	1800	ATV61EM18Y *(5)*	3400 x 2009 x 642	**ATV61EXA●M18Y**	1825.000
	2100	ATV61EM21Y *(5)*	3400 x 2009 x 642	**ATV61EXA●M21Y**	1825.000
	2400	ATV61EM24Y *(5)*	3400 x 2009 x 642	**ATV61EXA●M24Y**	1825.000

*(1) To obtain the complete enclosure reference, replace the ● with a **2** for IP 23 protection or a **5** for IP 54 protection.*
*Example for IP 23 protection: ATV61EXA●C63N4 becomes **ATV61EXA2C63N4**.*
(2) These values are given for a nominal switching frequency from 2.5…4.9 kHz for ATV61HC11Y…HC80Y drives. Above 2.5 kHz or 4 kHz, depending on the rating, the drive will reduce the switching frequency automatically in the event of an excessive temperature rise. For continuous operation above the nominal switching frequency, derate the nominal drive current, see derating curves on our website www.schneider-electric.com.
(3) The maximum prospective line Isc is of 50 kA. These values are given for use with upstream fuses (see the characteristics on our website www.schneider-electric.com).
(4) The maximum prospective line Isc is of 100 kA. These values are given for use with upstream fuses (see the characteristics on our website www.schneider-electric.com).
(5) Reference of the drive mounted in the enclosure; this reference cannot be ordered on its own.

Variable speed drives: page 1/16
Options: page 1/46
Drive/option combinations: page 1/34

Variable speed drives

Altivar 61 Plus

IP 23 or IP 54 floor-standing enclosure compact version

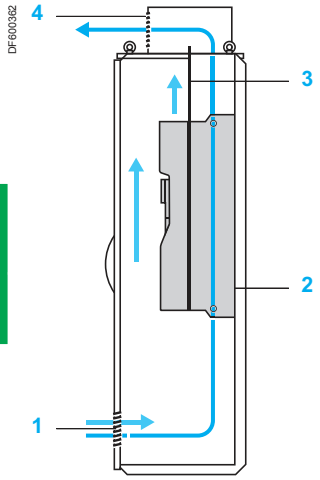

IP 23 cooling circuit

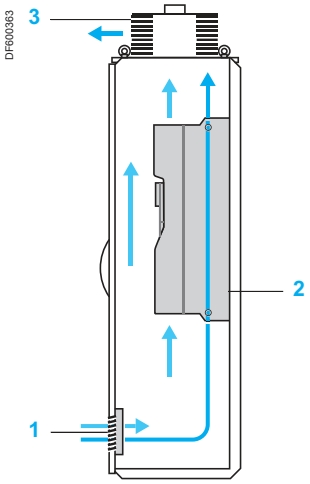

IP 54 cooling circuit

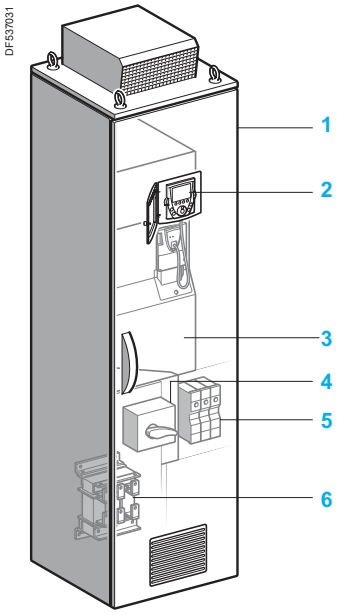

The standard ATV61EXC●●●●●● offer

Presentation

The ATV61EXC●●●●●● offer consists of a compact floor-standing enclosure providing IP 23 or IP 54 protection for industrial environments and infrastructures (tunnels, subways, smoke extraction and pumping, etc.).

Altivar 61 variable speed drives are supplied in an IP 23 or IP 54 ready-assembled enclosure to facilitate installation and setup and, in particular, to help ensure optimum ventilation.

The enclosure is supplied ready to connect.

One common air circuit provides enclosure ventilation, cooling the power section and the control section. A fan 2 integrated in the drive provides ventilation for the power section.

■ **IP 23 air circuit:**
□ Air intake 1 is via a grille on the lower part of the enclosure door.
□ Air outlet 4 is via a metal cover with protection against water splashes on the enclosure roof.
□ A separating plate 3 helps preventing internal turbulence.

■ **IP 54 air circuit:**
□ The grille 1 on the lower part of the door is fitted with a protective filter.
□ The air outlet 3 on the enclosure roof is fitted with a fan with filter.

The incoming air temperature must be between 0°C and 40°C (- 10°C and 40°C with enclosure heater) and may reach + 50°C with derating (class 3K3 according to IEC/EN 60721-3-3).
The internal temperature is monitored by a thermostat which can shut down the equipment.

The ATV61EXC●●●●●● offer covers motor power ratings from 90 kW to 800 kW with three types of power supply:
■ 380…415 V three-phase, 90 kW to 630 kW (**ATV61EXC●●●●N4**)
■ 500 V three-phase, 90 kW to 630 kW (**ATV61EXC●●●●N**)
■ 690 V three-phase, 110 kW to 800 kW (**ATV61EXC●●●●Y**)

It includes the choice of:
■ A standard compact offer
■ A modular offer, in which a wide selection of options can be incorporated depending on the drive rating

The standard compact offer

This consists of:

■ A wired, ready-assembled Sarel “Spacial SF” enclosure 1
■ A drive on heatsink ATV61HD90N4D…HC63N4D or ATV61HC11Y…HC80Y 3
■ An IP 65 remote mounting kit for graphic display terminal 2
■ A switch and fast-acting fuses 4
■ Motor terminals 5
■ A line choke 6

See pages 2/14 and 2/15.

Modular offer

This consists of:

- The standard compact offer
- One or more options (see pages 2/16 to 2/23)

As well as these specific options, the options available for Altivar 61 drives can be used, at the same rating, with the enclosed drives offer (see the summary tables of possible drive, option and accessory combinations on pages 1/36, 1/37 and 1/42 to 1/45).

For any configuration other than those shown on pages 2/16 to 2/23, please contact our Customer Care Centre.

Common options

These options can be integrated, whatever the enclosure model, without any need for modifications to the enclosure:

- Adaptor for 115 V ∿ logic inputs
- Encoder interface cards
- I/O expansion cards
- Multipump cards and “Controller Inside” programmable card
- Modbus TCP, EtherNet/IP, DeviceNet, InterBus, CC-Link, Modbus/Uni-Telway, PROFIBUS DP V0 or V1, LonWorks, METASYS N2, APOGEE FLN, BACnet communication cards
- “Preventa type AC” or “Preventa type ATE” fault relay
- PTC relays, PT100 relays
- Motor heater
- Additional 24 V ⎓ power supply
- Emergency stop button
- Enclosure lighting
- Key switch (Local/Remote)
- Power supply circuit for external fan

See pages 2/16 and 2/17. For other options, please contact our Customer Care Centre.

Options dependent on the drive rating

These options depend on the drive rating. Some may lead to modification of the size of the enclosure:

- Braking unit
- Isolating handle for switch
- Circuit-breaker
- Line contactor
- Control transformer
- Ammeter
- Enclosure heater
- Motor choke
- Sinus filter
- Plinth

See pages 2/18 to 2/23. For other options, please contact our Customer Care Centre.

Variable speed drives

Altivar 61 Plus

IP 23 or IP 54 floor-standing enclosure compact version

PF095307

ATV61EXC2●●●●●

IP 23 or IP 54 floor-standing enclosure compact version

Degree of protection	Motor Power indicated on rating plate (1)	With drive	Dimensions	Reference	Weight
	kW		W x H x D		kg
Three-phase supply voltage 380…415 V 50/60 Hz *(2)*					
IP 23	90	ATV61HD90N4D	600 x 2162 x 642	**ATV61EXC2D90N4**	315.000
	110	ATV61HC11N4D	600 x 2162 x 642	**ATV61EXC2C11N4**	315.000
	132	ATV61HC13N4D	600 x 2162 x 642	**ATV61EXC2C13N4**	335.000
	160	ATV61HC16N4D	600 x 2162 x 642	**ATV61EXC2C16N4**	350.000
	200	ATV61HC22N4D	800 x 2162 x 642	**ATV61EXC2C22N4**	380.000
	220				
	250	ATV61HC25N4D	800 x 2162 x 642	**ATV61EXC2C25N4**	485.000
	280	ATV61HC31N4D	800 x 2162 x 642	**ATV61EXC2C31N4**	485.000
	315				
	355	ATV61HC40N4D	1200 x 2162 x 642	**ATV61EXC2C40N4**	640.000
	400				
	500	ATV61HC50N4D	1200 x 2162 x 642	**ATV61EXC2C50N4**	680.000
	560	ATV61HC63N4D	1200 x 2162 x 642	**ATV61EXC2C63N4**	805.000
	630				
IP 54	90	ATV61HD90N4D	600 x 2262 x 642	**ATV61EXC5D90N4**	325.000
	110	ATV61HC11N4D	600 x 2262 x 642	**ATV61EXC5C11N4**	325.000
	132	ATV61HC13N4D	600 x 2262 x 642	**ATV61EXC5C13N4**	345.000
	160	ATV61HC16N4D	600 x 2262 x 642	**ATV61EXC5C16N4**	360.000
	200	ATV61HC22N4D	800 x 2262 x 642	**ATV61EXC5C22N4**	385.000
	220				
	250	ATV61HC25N4D	800 x 2262 x 642	**ATV61EXC5C25N4**	485.000
	280	ATV61HC31N4D	800 x 2262 x 642	**ATV61EXC5C31N4**	485.000
	315				
	355	ATV61HC40N4D	1200 x 2262 x 642	**ATV61EXC5C40N4**	660.000
	400				
	500	ATV61HC50N4D	1200 x 2262 x 642	**ATV61EXC5C50N4**	700.000
	560	ATV61HC63N4D	1200 x 2262 x 642	**ATV61EXC5C63N4**	835.000
	630				
Three-phase supply voltage 500 V 50/60 Hz *(2)*					
IP 23	90	ATV61HC11Y	600 x 2162 x 642	**ATV61EXC2D90N**	361.000
	110	ATV61HC13Y	600 x 2162 x 642	**ATV61EXC2C11N**	361.000
	132	ATV61HC16Y	600 x 2162 x 642	**ATV61EXC2C13N**	412.000
	160	ATV61HC20Y	600 x 2162 x 642	**ATV61EXC2C16N**	412.000
	200	ATV61HC25Y	800 x 2162 x 642	**ATV61EXC2C20N**	503.000
	250	ATV61HC31Y	800 x 2162 x 642	**ATV61EXC2C25N**	553.000
	315	ATV61HC40Y	800 x 2162 x 642	**ATV61EXC2C31N**	553.000
	400	ATV61HC50Y	1200 x 2162 x 642	**ATV61EXC2C40N**	828.000
	500	ATV61HC63Y	1200 x 2162 x 642	**ATV61EXC2C50N**	916.000
	630	ATV61HC80Y	1200 x 2162 x 642	**ATV61EXC2C63N**	916.000
IP 54	90	ATV61HC11Y	600 x 2262 x 642	**ATV61EXC5D90N**	371.000
	110	ATV61HC13Y	600 x 2262 x 642	**ATV61EXC5C11N**	371.000
	132	ATV61HC16Y	600 x 2262 x 642	**ATV61EXC5C13N**	422.000
	160	ATV61HC20Y	600 x 2262 x 642	**ATV61EXC5C16N**	422.000
	200	ATV61HC25Y	800 x 2262 x 642	**ATV61EXC5C20N**	503.000
	250	ATV61HC31Y	800 x 2262 x 642	**ATV61EXC5C25N**	553.000
	315	ATV61HC40Y	800 x 2262 x 642	**ATV61EXC5C31N**	553.000
	400	ATV61HC50Y	1200 x 2262 x 642	**ATV61EXC5C40N**	858.000
	500	ATV61HC63Y	1200 x 2262 x 642	**ATV61EXC5C50N**	946.000
	630	ATV61HC80Y	1200 x 2262 x 642	**ATV61EXC5C63N**	946.000

(1) These values are given for a nominal switching frequency 4 kHz for ATV61HD90N4D or 2.5 kHz for ATV61HC11N4D…HC63N4D drives or of 2.5 kHz for ATV61HC11Y…HC80Y drives for use in continuous operation.
The switching frequency is adjustable from 2…8 kHz for ATV61HD90N4D…ATV61HC63N4D drives and from 2.5…4.9 kHz for ATV61HC11Y…HC80Y drives. Above 2.5 or 4 kHz depending on the rating, the drive will reduce the switching frequency automatically in the event of an excessive temperature rise. For continuous operation above the nominal switching frequency, derate the nominal drive current, see derating curves on our website www.schneider-electric.com.

(2) The maximum prospective line Isc is of 100 kA. These values are given for use with upstream fuses (see the characteristics on our website www.schneider-electric.com).

Variable speed drives: page 1/16
Options: page 1/46
Drive/option combinations: page 1/34

Variable speed drives

Altivar 61 Plus

IP 23 or IP 54 floor-standing enclosure compact version

IP 23 or IP 54 floor-standing enclosure compact version (continued)

Degree of protection	Motor Power indicated on rating plate (1)	With drive	Dimensions	Reference	Weight
	kW		W x H x D		kg
Three-phase supply voltage 690 V 50/60 Hz *(2)*					
IP 23	110	ATV61HC11Y	600 x 2162 x 642	**ATV61EXC2C11Y**	361.000
	132	ATV61HC13Y	600 x 2162 x 642	**ATV61EXC2C13Y**	361.000
	160	ATV61HC16Y	600 x 2162 x 642	**ATV61EXC2C16Y**	412.000
	200	ATV61HC20Y	600 x 2162 x 642	**ATV61EXC2C20Y**	412.000
	250	ATV61HC25Y	800 x 2162 x 642	**ATV61EXC2C25Y**	503.000
	315	ATV61HC31Y	800 x 2162 x 642	**ATV61EXC2C31Y**	553.000
	400	ATV61HC40Y	800 x 2162 x 642	**ATV61EXC2C40Y**	553.000
	500	ATV61HC50Y	1200 x 2162 x 642	**ATV61EXC2C50Y**	828.000
	630	ATV61HC63Y	1200 x 2162 x 642	**ATV61EXC2C63Y**	916.000
	800	ATV61HC80Y	1200 x 2162 x 642	**ATV61EXC2C80Y**	916.000
IP 54	110	ATV61HC11Y	600 x 2262 x 642	**ATV61EXC5C11Y**	371.000
	132	ATV61HC13Y	600 x 2262 x 642	**ATV61EXC5C13Y**	371.000
	160	ATV61HC16Y	600 x 2262 x 642	**ATV61EXC5C16Y**	422.000
	200	ATV61HC20Y	600 x 2262 x 642	**ATV61EXC5C20Y**	422.000
	250	ATV61HC25Y	800 x 2262 x 642	**ATV61EXC5C25Y**	503.000
	315	ATV61HC31Y	800 x 2262 x 642	**ATV61EXC5C31Y**	553.000
	400	ATV61HC40Y	800 x 2262 x 642	**ATV61EXC5C40Y**	553.000
	500	ATV61HC50Y	1200 x 2262 x 642	**ATV61EXC5C50Y**	858.000
	630	ATV61HC63Y	1200 x 2262 x 642	**ATV61EXC5C63Y**	946.000
	800	ATV61HC80Y	1200 x 2262 x 642	**ATV61EXC5C80Y**	946.000

(1) These values are given for a nominal switching frequency of 2.5 kHz for ATV61HC11Y…HC80Y for use in continuous operation.
The switching frequency is adjustable from 2.5…4.9 kHz for ATV61HC11Y…HC80Y drives. Above 2.5 kHz or 4 kHz, depending on the rating, the drive will reduce the switching frequency automatically in the event of an excessive temperature rise. For continuous operation above the nominal switching frequency, derate the nominal drive current, see derating curves on our website www.schneider-electric.com

(2) The maximum prospective line Isc is of 100 kA. These values are given for use with upstream fuses (see the characteristics on our website www.schneider-electric.com).

Variable speed drives: page 1/16
Options: page 1/46
Drive/option combinations: page 1/34

Variable speed drives

Altivar 61 Plus

Floor-standing enclosure with separate air flows or compact version

Common options

Common options without modification of the enclosure *(1)*

Description	Reference	Weight kg
Adaptor for 115 V ∼ logic inputs	**VW3A3E101** *(2)*	0.200
Encoder interface cards with RS 422, 5 V compatible differential outputs	**VW3A3E401** *(3)*	0.200
Encoder interface card with 12 V open collector outputs	**VW3A3E403** *(3)*	0.200
Encoder interface card with 15 V open collector outputs	**VW3A3E404** *(3)*	0.200
Encoder interface card with 12 V push-pull outputs	**VW3A3E405** *(3)*	0.200
Encoder interface card with 15 V push-pull outputs	**VW3A3E406** *(3)*	0.200
Encoder interface card with 24 V push-pull outputs	**VW3A3E407** *(3)*	0.200
Logic I/O expansion card	**VW3A3E201** *(4)*	0.320
Extended I/O expansion card	**VW3A3E202** *(4)*	0.300
Multi-pump card	**VW3A3E502** *(5) (6)*	0.320
"Water solution" multi-pump card	**VW3A3E503** *(5) (6)*	0.320
"Controller Inside" programmable card	**VW3A3E501** *(6) (7)*	0.300
Modbus TCP Daisy Chain communication card	**VW3A3E310D** *(8)*	0.300
EtherNet/IP communication card	**VW3A3E316** *(8)*	0.300
DeviceNet communication card	**VW3A3E309** *(8)*	0.300
InterBus communication card	**VW3A3E304** *(8)*	0.300
CC-Link communication card	**VW3A3E317** *(8)*	0.320
Modbus Plus communication card	**VW3A3E302** *(8)*	0.300
Modbus/Uni-Telway communication card	**VW3A3E303** *(8)*	0.300
PROFIBUS DP V0 communication card	**VW3A3E307** *(8)*	0.300
PROFIBUS DP V1 communication card	**VW3A3E307S371** *(8)*	0.300
LonWorks communication card	**VW3A3E312** *(8)*	0.300
METASYS N2 communication card	**VW3A3E313** *(8)*	0.300
APOGEE FLN communication card	**VW3A3E314** *(8)*	0.300
BACnet communication card	**VW3A3E319** *(8)*	0.300

(1) For any other configuration, please contact our Customer Care Centre.
(2) The characteristics of the VW3A3E101 adaptor are identical to those of the VW3A3101 adaptor (see page 1/29 or consult our website www.schneider-electric.com).
(3) The characteristics of the VW3A3E401 and 403…407 encoder interface cards are identical to those of the VW3A3401 and 403...407 encoder interface cards (see page 1/46 or consult our website www.schneider-electric.com).
(4) The characteristics of the VW3A3E201 and VW3A3E202 I/O expansion cards are identical to those of the VW3A3201 and VW3A3202 expansion cards (see page 1/47 or consult our website www.schneider-electric.com).
(5) The characteristics of the VW3A3E502 and VW3A3E503 I/O multi-pump cards are identical to those of the VW3A3502 and VW3A3 03 multi-pump cards (see pages 1/48 and 1/49) or consult our website www.schneider-electric.com).
(6) If the power consumption does not exceed 200 mA, this card can be powered by the drive. For a power consumption in excess of 200 mA, the additional 24 V ⎓ power supply option, reference VW3AE1401, should be ordered separately (see page 2/17).
(7) The characteristics of the VW3A3E501 Controller Inside programmable card are identical to those of the VW3A3501 Controller Inside programmable card (see pages 1/50 to 1/53 or consult our website www.schneider-electric.com).
(8) The characteristics of the VW3A3E302…319 communication cards are identical to those of the VW3A3302…319 communication cards (see page 1/54 to 1/59 or consult our website www.schneider-electric.com).

Variable speed drives

Altivar 61 Plus

Floor-standing enclosure with separate air flows or compact version

Common options

Common options without modification of the enclosure (continued) (1)		
Description	**Reference**	**Weight kg**
Remote control terminals X12	**VW3AE1201**	0.700
Remote option card terminals X13 *(2)* for I/O expansion cards VW3A3E201 and 202	**VW3AE1202**	0.900
External 230 V ∿ supply terminals	**VW3AE1301**	0.100
Additional 24 V ⎓ power supply, nominal current 2 A *(3) (4)*	**VW3AE1401**	2.200
External 24 V ⎓ supply terminals	**VW3AE1402**	0.100
Emergency stop button	**VW3AE1501**	0.100
"Preventa type AC" fault relay *(5)*	**VW3AE1502**	0.100
"Preventa type ATE" fault relay *(5)*	**VW3AE1503**	0.100
Enclosure lighting *(4)*	**VW3AE1601**	1.500
Key switch (Local/Remote)	**VW3AE1801**	0.200
Additional electrical input isolation *(5)*	**VW3AE1901**	0.100
Additional electrical output isolation *(5)*	**VW3AE1902**	0.100
PTC relay *(4)*	**VW3AE2001**	0.100
PTC relay with PTB (ATEX) certification *(4) (6)*	**VW3AE2002**	0.100
PT100 relay *(5)* for motor winding	**VW3AE2003**	0.300
PT100 relay *(5)* for motor bearings	**VW3AE2004**	0.300
PT100 relay *(5)* for line supply transformer	**VW3AE2005**	0.300
Motor heater 200 W, 230 V *(4)*	**VW3AE2101**	0.200
Power supply circuit with protection *(4)* for 1000 W external fan	**VW3AE2102**	0.200
Relay for logic output *(5)*	**VW3AE2201**	0.100
Voltmeter three-phase supply voltage 380…415 V	**VW3AE2301**	0.400
Voltmeter three-phase supply voltage 500 V	**VW3AE2302**	0.400
Voltmeter three-phase supply voltage 690 V	**VW3AE2303**	0.400
Fan interruption *(4)*	**VW3AE2901**	0.100
Modified colors for Australia	**VW3AE3001**	0.100
Insulation monitoring device on an IT system *(4)*	**VW3AE2601**	5.000
Selector for IT system	**VW3AE2701**	–

(1) For any other configuration, please contact our Customer Care Centre.
(2) The X13 terminals, reference VW3AE1202, include the X12 terminals, reference VW3AE1201.
(3) Essential if the power consumption of the option cards exceeds 200 mA.
(4) This option requires a 230 V ∿ supply, reference VW3AE1301.
(5) This option requires a 24 V ⎓ supply voltage, reference VW3AE1401.
(6) ATEX: Please refer to the ATEX guide which is available on our website www.schneider-electric.com.

Variable speed drives

Altivar 61 Plus

Floor-standing enclosure with separate air flows or compact version

Options dependent on the drive rating

Options dependent on the drive rating *(1)*

Three-phase supply voltage 380…415 V 50/60 Hz

Description	For ATV 61 enclosure	Reference	Weight kg
Resistance braking unit	EXC●C25N4, C31N4 EXS5C25N4, C31N4	**VW3A7E101** *(3)*	31.000
	EXC●C40N4…C63N4	**VW3AE1003** *(2)*	190.000
	EXS5C40N4…C63N4	**VW3A7E102** *(3)*	205.000
Isolating handle for switch	EXC●D55N4H	**VW3AE0190**	0.500
	EXC●D90N4...C13N4 EXC●D75N4H…C11N4H EXS5D90N4...C13N4	**VW3AE0103**	1.000
	EXC●C16N4...C31N4 EXC●C13N4H…C31N4H EXS5C16N4...C31N4	**VW3AE0104**	2.000
	EXC●C40N4...C63N4 EXC●C40N4H...C63N4H EXS5C40N4…C63N4 EXA●C63N4…M14N4	**VW3AE0105**	2.000
Circuit-breaker *(4)*	EXC●D90N4...C11N4 EXS5D90N4...C11N4	**VW3AE0142**	–
	EXC●C13N4 EXS5C13N4	**VW3AE0143**	–
	EXC●C16N4 EXS5C16N4	**VW3AE0146**	1.400
	EXC●C22N4 EXS5C22N4	**VW3AE0147**	1.400
	EXC●C25N4 EXS5C25N4	**VW3AE0148**	1.400
	EXC●C31N4 EXS5C31N4	**VW3AE0110**	9.400
	EXC●C40N4 EXS5C40N4	**VW3AE0151**	–
	EXC●C50N4 EXS5C50N4	**VW3AE0169**	–
	EXC●C63N4 EXS5C63N4 EXA●C63N4, C71N4	**VW3AE0170**	–
	EXA●C90N4	**VW3AE0171**	–
	EXA●M11N4	**VW3AE0172**	–
	EXA●M13N4, M14N4	**VW3AE0173**	–
	EXC●D75N4H	**VW3AE0141**	0.500
	EXC●D90N4H…C11N4H	**VW3AE0142**	–
	EXC●C13N4H, C16N4H	**VW3AE0146**	1.400
	EXC●C22N4H, C25N4H	**VW3AE0147**	1.400
	EXC●C31N4H	**VW3AE0148**	1.400
	EXC●C40N4H, C50N4H	**VW3AE0151**	–
	EXC●C63N4H	**VW3AE0169**	–
Door handle for circuit-breaker	EXC●D90N4...C11N4 EXC●D75N4H...C11N4H EXS5D90N4...C11N4	**VW3AE0114**	1.000
	EXC●C13N4...C25N4 EXC●C13N4H…C31N4H EXS5C13N4...C25N4	**VW3AE0115**	2.000
	EXC●C31N4...C63N4 EXC●C40N4H...C63N4H EXS5C31N4...C63N4 EXA●C63N4, C71N4	**VW3AE0116**	2.000

(1) For any other configuration, please contact our Customer Care Centre.
(2) This option depends on the drive rating and may lead to modification of the size of the enclosure. Please refer to the dimensions on our website www.schneider-electric.com.
(3) The characteristics of the VW3A7E101 and VW3A7E102 braking units are identical to those of the VW3A7101 and VW3A7102 braking units (see page 1/60 or consult our website www.schneider-electric.com).
(4) The circuit-breaker replaces the switch in the standard offer.

Variable speed drives

Altivar 61 Plus

Floor-standing enclosure with separate air flows or compact version

Options dependent on the drive rating

Options dependent on the drive rating (continued) *(1)*

Three-phase supply voltage 380…415 V 50/60 Hz (continued)

Description	For ATV 61 enclosure	Reference	Weight kg
Line contactor *(2)*	EXC●D90N4 EXS5D90N4	**VW3AE0206**	7.000
	EXC●C11N4 EXS5C11N4	**VW3AE0207**	7.000
	EXC●C13N4 EXS5C13N4	**VW3AE0218**	10.000
	EXC●C16N4 EXS5C16N4	**VW3AE0208**	11.000
	EXC●C22N4	**VW3AE0209**	12.000
	EXS5C22N4...C31N4	**VW3AE0216**	10.000
	EXC●C25N4	**VW3AE0210**	14.000
	EXC●C31N4, C40N4 EXS5C40N4	**VW3AE0211**	21.000
	EXC●C50N4 EXS5C50N4	**VW3AE0213**	28.000
	EXC●C63N4 EXS5C63N4	**VW3AE0214**	42.000
	EXA●C63N4, C71N4 *(3)*	**VW3AE0227**	42.000
	EXA●C90N4...M14N4	**VW3AE0224**	84.000
Switch for 12-pulse input	EXA●C63N4, C71N4	**VW3AE2416**	–
	EXA●C90N4	**VW3AE2418**	–
	EXA●M11N4	**VW3AE2419**	–
	EXA●M13N4, M14N4	**VW3AE2420**	–
Line choke	EXA●C63N4, C71N14	**VW3AE2501**	132.000
	EXA●C90N4	**VW3AE2502** *(4)*	202.000
	EXA●M11N4…M14N14	**VW3AE2503** *(4)*	264.000
500 VA ∼ control transformer, 230 V ∼ output	EXC●D90N4…C22N4 EXS5D90N4…C22N4	**VW3AE0302**	8.000
800 VA ∼ control transformer, 230 V ∼ output	EXC●C25N4…C63N4 EXS5C25N4…C63N4	**VW3AE0303**	11.000
Ammeter	EXC●D90N4 EXC●D75N4H, D90N4H EXS5D90N4	**VW3AE0404**	0.200
	EXC●C11N4…C16N4 EXC●C11N4H…C16N4H EXS5C11N4…C16N4	**VW3AE0406**	0.200
	EXC●C22N4, C25N4 EXC●C22N4H…C31N4H EXS5C22N4, C25N4	**VW3AE0426**	0.200
	EXC●C31N4, C40N4 EXC●C40N4H...C50N4H EXS5C31N4, C40N4	**VW3AE0409**	0.200
	EXC●C50N4 EXC●C63N4H EXS5C50N4	**VW3AE0427**	0.200
	EXC●C63N4 EXS5C63N4	**VW3AE0411**	0.200
	EXA●C63N4, C71N4	**VW3AE0411** *(5)* **VW3AE0421** *(6)*	0.200
	EXA●C90N4	**VW3AE0413** *(5)* **VW3AE0421** *(6)*	0.200
	EXA●M11N4	**VW3AE0414** *(5)* **VW3AE0429** *(6)*	0.200
	EXA●M13N4, M14N4	**VW3AE0415** *(5)* **VW3AE0423** *(6)*	0.200

(1) For any other configuration, please contact our Customer Care Centre.
(2) This option requires a 230 V ∼ supply, reference VW3AE1301.
(3) If a line contactor and choke are used, order reference VW3AE0225 (50.000 kg) (see note 3).
(4) These options depend on the drive rating and may lead to modification of the size of the enclosure. Please refer to the dimensions on our website www.schneider-electric.com.
(5) For 6-pulse mounting.
(6) For 12-pulse mounting.

Variable speed drives: page 1/16
Options: page 1/46
Drive/option combinations: page 1/34

Variable speed drives

Altivar 61 Plus

Floor-standing enclosure with separate air flows or compact version

Options dependent on the drive rating

Options dependent on the drive rating (continued) *(1)*

Three-phase supply voltage 380…415 V 50/60 Hz (continued)

Description	For ATV 61 enclosure	Reference	Weight kg
Enclosure heater *(2)*	EXC●D90N4…C31N4 EXC●D75N4H…C31N4H EXS5D90N4…C31N4	**VW3AE0501**	0.500
	EXC●C40N4…C63N4 EXC●C40N4H…C63N4H EXS5C40N4…C63N4 EXA●C63N4, C71N4	**VW3AE0502**	1.000
	EXA●C90N4…M14N4	**VW3AE0503**	1.500
	EXA●M15YH…M24YH	**VW3AE0504**	2.000
Motor choke	EXC●D90N4 EXC●D55N4H…D90N4H	**VW3AE0603**	17.000
	EXS5D90N4	**VW3AE0615**	37.000
	EXC●C11N4, C13N4 EXC●C11N4H, C13N4H	**VW3AE0604**	35.000
	EXS5C11N4	**VW3AE0616**	55.000
	EXS5C13N4	**VW3AE0617**	55.000
	EXC●C16N4, C22N4 EXC●C16N4H, C22N4H	**VW3AE0605**	64.000
	EXS5C16N4	**VW3AE0618** *(3)*	154.000
	EXS5C22N4	**VW3AE0619** *(3)*	157.000
	EXC●C25N4, C31N4 EXC●C25N4H, C31N4H	**VW3AE0606**	102.000
	EXS5C25N4, C31N4	**VW3AE0621** *(3)*	192.000
	EXC2C40N4 EXC●C40N4H	**VW3AE0608** *(3)*	222.000
	EXC5C40N4	**VW3AE0612** *(3)*	222.000
	EXS5C40N4	**VW3AE0623** *(3)*	222.000
	EXC2C50N4 EXC●C50N4H	**VW3AE0609** *(3)*	228.000
	EXC5C50N4	**VW3AE0613** *(3)*	228.000
	EXS5C50N4	**VW3AE0624** *(3)*	228.000
	EXC2C63N4 EXC●C63N4H	**VW3AE0610** *(3)*	234.000
	EXC5C63N4	**VW3AE0614** *(3)*	234.000
	EXS5C63N4	**VW3AE0625** *(3)*	234.000
	EXA●C63N4, C71N4	**VW3AE0635**	132.000
	EXA●C90N4…M14N4	**VW3AE0636**	264.000
Sinus filter *(3) (4)*	EXC2D90N4, C11N4	**VW3AE0641**	318.000
	EXC5D90N4, C11N4	**VW3AE0653**	348.000
	EXS5D90N4, C11N4	**VW3AE0665**	318.000
	EXC2C13N4	**VW3AE0643**	357.000
	EXC5C13N4	**VW3AE0655**	357.000
	EXS5C13N4	**VW3AE0667**	357.000
	EXC2C16N4	**VW3AE0644**	365.000
	EXC5C16N4	**VW3AE0656**	365.000
	EXS5C16N4	**VW3AE0668**	365.000
	EXC2C22N4	**VW3AE0646**	384.000
	EXC5C22N4	**VW3AE0658**	384.000
	EXS5C22N4	**VW3AE0670**	384.000
	EXC2C25N4, C31N4	**VW3AE0648**	434.000
	EXC5C25N4, C31N4	**VW3AE0660**	434.000
	EXS5C25N4, C31N4	**VW3AE0672**	434.000
	EXC2C40N4	**VW3AE0650**	870.000
	EXC5C40N4	**VW3AE0662**	870.000
	EXS5C40N4	**VW3AE0674**	870.000
	EXC2C50N4	**VW3AE0651**	870.000
	EXC5C50N4	**VW3AE0663**	900.000
	EXS5C50N4	**VW3AE0675**	900.000
	EXC2C63N4	**VW3AE0652**	900.000
	EXC5C63N4	**VW3AE0664**	930.000
	EXS5C63N4	**VW3AE0676**	930.000

(1) For any other configuration, please contact our Customer Care Centre.
(2) This option requires a 230 V ∼ supply, reference VW3AE1301.
(3) These options depend on the drive rating and may lead to modification of the size of the enclosure. Please refer to the dimensions on our website www.schneider-electric.com.
(4) The sinus filter option is not compatible with the motor choke option.

Variable speed drives: page 1/16
Options: page 1/46
Drive/option combinations: page 1/34

Variable speed drives

Altivar 61 Plus

Floor-standing enclosure with separate air flows or compact version

Options dependent on the drive rating

Options dependent on the drive rating (continued) *(1)*

Three-phase supply voltage 380…415 V 50/60 Hz (continued)

Description		For ATV 61 enclosure	Reference	Weight kg
200 mm plinth	Without motor choke	EXC●D55N4H	**VW3AE0807**	9.000
		EXC●D90N4…C22N4 EXC●D75N4H…C11N4H	**VW3AE0801**	11.000
		EXC●C25N4, C31N4 EXC●C13N4H, C16N4H	**VW3AE0802**	13.000
		EXC●C22N4H	**VW3AE0827**	22.000
		EXC●C25N4H, C31N4H	**VW3AE0828**	26.000
		EXC●C40N4, C50N4	**VW3AE0803**	15.000
		EXC●C40N4H, C50N4H	**VW3AE0829**	30.000
		EXC●C63N4	**VW3AE0804**	17.000
		EXC●C63N4H	**VW3AE0830**	34.000
		EXA●C63N4, C71N4	**VW3AE0820** *(2)*	38.000
		EXA●C90N4…M14N4	**VW3AE0822**	69.000
	With motor choke	EXC●D55N4H	**VW3AE0807**	9.000
		EXC●D90N4…C22N4 EXC●D75N4H…C11N4H	**VW3AE0801**	11.000
		EXC●C25N4, C31N4 EXC●C13N4H, C16N4H	**VW3AE0802**	13.000
		EXC●C22N4H	**VW3AE0827**	22.000
		EXC●C25N4H, C31N4H	**VW3AE0828**	26.000
		EXC●C40N4, C50N4	**VW3AE0805**	24.000
		EXC●C40N4H, C50N4H	**VW3AE0831**	39.000
		EXC●C63N4	**VW3AE0806**	26.000
		EXC●C63N4H	**VW3AE0832**	43.000
		EXA●C63N4, C71N4	**VW3AE0820** *(2)*	38.000
		EXA●C90N4…M14N4	**VW3AE0822**	69.000
	With line choke	EXA●C63N4, C71N4	**VW3AE0820** *(2)*	38.000
		EXA●C90N4…M14N4	**VW3AE0824**	78.000
Plinth for braking unit		EXC●C40N4…C63N4	**VW3AE0810**	9.000
Plinth for sinus filter		EXC●D90N4…C31N4	**VW3AE0816**	11.000
		EXC●C40N4...C63N4	**VW3AE0817**	13.000

(1) For any other configuration, please contact our Customer Care Centre.
(2) If a line choke and a line contactor are used, order reference VW3AE0821 (40.000 kg).

Variable speed drives: page 1/16
Options: page 1/46
Drive/option combinations: page 1/34

Variable speed drives

Altivar 61 Plus

Floor-standing enclosure with separate air flows or compact version

Options dependent on the drive rating

Options dependent on the drive rating (continued) *(1)*

Three-phase supply voltage 500 V and 690 V 50/60 Hz

Description	For ATV 61 enclosure		Reference	Weight kg
	500 V	690 V		
Resistance braking unit	EXC●C20N…C31N	EXC●C25Y…C40Y	**VW3AE1004** *(2)*	190.000
	EXS5C20N…C31N	EXS5C25Y…C40Y	**VW3A7E103** *(2) (3)*	205.000
	EXC●C40N…C63N	EXC●C50Y…C80Y	**VW3AE1005** *(2)*	190.000
	EXS5C40N…C63N	EXS5C50Y…C80Y	**VW3A7E104** *(2) (3)*	205.000
Isolating handle for switch	EXC●D90N…C16N EXS5D90N…C16N	EXC●C11Y…C20Y EXS5C11Y…C20Y	**VW3AE0103**	1.000
	EXC●C20N…C31N EXS5C20N…C31N	EXC●C25Y…C40Y EXS5C25Y…C40Y	**VW3AE0104**	2.000
	EXC●C40N…C63N EXS5C40N…C63N EXA●C63N…M18N	EXC●C50Y…C80Y EXS5C50Y…C80Y EXA●C80Y…M24Y EXA●C80YH...M24YH	**VW3AE0105**	2.000
Circuit-breaker *(4)*	EXC●D90N, EXS5D90N	–	**VW3AE0141**	–
	EXC●C11N, EXC●C13N EXS5C11N, EXS5C13N	–	**VW3AE0142**	–
	EXC●C16N EXS5C16N	EXC●C11Y, C20Y EXS5C11Y, C20Y	**VW3AE0143**	4.000
	EXC●C20N, EXS5C20N	–	**VW3AE0146**	1.400
	EXC●C25N EXS5C25N	EXC●C25Y…C40Y EXS5C25Y…C40Y	**VW3AE0147**	1.400
	EXC●C31N, EXS5C31N	–	**VW3AE0148**	1.400
	EXC●C40N EXS5C40N	EXC●C50Y, C63Y EXS5C50Y, C63Y	**VW3AE0150**	–
	EXC●C50N EXS5C50N	EXC●C80Y EXS5C80Y	**VW3AE0151**	–
	EXC●C63N, EXS5C63N	–	**VW3AE0152**	–
	EXA●C63N	EXA●C80Y EXA●C80YH	**VW3AE0169**	–
	EXA●C80N, C90N	EXA●M10Y, M12Y EXA●M10YH, M12YH	**VW3AE0170**	–
	EXA●M11N	EXA●M15Y EXA●M15YH	**VW3AE0171**	–
	EXA●M13N	EXA●M18Y EXA●M18YH	**VW3AE0172**	–
	EXA●M15N, M18N	EXA●M21Y, M24Y EXA●M21YH, M24YH	**VW3AE0173**	–
Door handle for circuit-breaker	EXC●C11N, C13N EXS5C11N, C13N	–	**VW3AE0114**	1.000
	EXC●C16N…C31N EXS5C16N…C31N	EXC●C11Y…C40Y EXS5C11Y…C40Y	**VW3AE0115**	2.000
	EXC●C40N…C63N EXS5C40N…C63N EXA●C63N…C90N	EXC●C50Y, C63Y EXS5C50Y, C63Y EXA●C80Y…M12Y EXA●C80YH...M12YH	**VW3AE0116**	2.000
Line contactor *(5)*	EXC●D90N, EXS5D90N	–	**VW3AE0205**	4.000
	EXC●C11N, EXS5C11N	–	**VW3AE0206**	7.000
	EXC●C13N EXS5C13N	EXC●C11Y…C16Y EXS5C11Y…C16Y	**VW3AE0218**	10.000
	–	EXC●C20Y, EXS5C20Y	**VW3AE0208**	11.000
	EXC●C16N...C20N EXS5C16N...C20N	EXC●C25Y, EXS5C25Y	**VW3AE0209**	12.000
	EXC●C25N, C31N EXS5C25N, C31N	EXC●C31Y EXS5C31Y	**VW3AE0210**	14.000
	–	EXC●C40Y, EXS5C40Y	**VW3AE0211**	21.000
	EXC●C40N, EXS5C40N	EXC●C50Y, EXS5C50Y	**VW3AE0212**	24.000
	EXC●C50N, C63N EXS5C50N, C63N	EXC●C63Y, C80Y EXS5C20Y, C80Y	**VW3AE0213**	28.000
	EXA●C63N…C90N	EXA●C80Y…M12Y	**VW3AE0227** *(6)*	42.000
	EXA●M11N…M18N	EXA●M15Y…M24Y	**VW3AE0226**	84.000
Switch for 12-pulse input	EXA●C63N	EXA●C80Y	**VW3AE2415**	–
	EXA●C80N, C90N	EXA●M10Y, M12Y	**VW3AE2416**	–
	EXA●M11N	EXA●M15Y	**VW3AE2418**	–
	EXA●M13N	EXA●M18Y	**VW3AE2419**	–
	EXA●M15N, M18N	EXA●M21Y, M24Y	**VW3AE2420**	–

(1) For any other configuration, please contact our Customer Care Centre.
(2) These options depend on the drive rating and may lead to modification of the size of the enclosure. Please refer to the dimensions on our website www.schneider-electric.com.
(3) The characteristics of the VW3A7E103 and VW3A7E104 braking units are identical to those of the VW3A7103 and VW3A7104 braking units (see page 1/60 or consult our website www.schneider-electric.com).
(4) The circuit-breaker replaces the switch in the standard offer.
(5) This option requires a 230 V ∿ supply, reference VW3AE1301.
(6) If a line contactor and choke are used, order reference VW3AE0225 (50.000 kg) (see note 2).

Variable speed drives

Altivar 61 Plus

Floor-standing enclosure with separate air flows or compact version

Options dependent on the drive rating

Options dependent on the drive rating (continued) *(1)*

Three-phase supply voltage 500 V and 690 V 50/60 Hz (continued)

Description		For ATV 61 enclosure 500 V	For ATV 61 enclosure 690 V	Reference	Weight kg
Line choke		EXA●C63N	EXA●C80Y	**VW3AE2504**	154.000
		EXA●C80N	EXA●M10Y	**VW3AE2505**	121.000
		EXA●C90N	EXA●M12Y	**VW3AE2506**	136.000
		EXA●M11N	EXA●M15Y	**VW3AE2507** *(2)*	308.000
		EXA●M13N, M15N	EXA●M18Y, M21Y	**VW3AE2508** *(2)*	242.000
		EXA●M18N	EXA●M24Y	**VW3AE2509** *(2)*	273.000
Ammeter		EXC●D90N, C11N EXS5D90N, C11N	EXC●C11Y… C16Y EXS5C11Y… C16Y	**VW3AE0404**	0.200
		EXC●C13N…C20N EXS5C13N…C20N	EXC●C20Y… C31Y EXS5C20Y… C31Y	**VW3AE0406**	0.200
		EXC●C25N, C31N EXS5C25N, C31N	EXC●C40Y EXS5C40Y	**VW3AE0426**	0.200
		EXC●C40N, C50N EXS5C40N,C50N	EXC●C50Y…C80Y EXS5C50Y…C80Y EXA●C80YH	**VW3AE0409**	0.200
		EXC●C63N EXS5C63N	EXA●M10YH	**VW3AE0427**	0.200
		EXA●C63N	–	**VW3AE0427** *(3)* **VW3AE0428** *(4)*	0.200
		–	EXA●C80Y	**VW3AE0409** *(3)* **VW3AE0428** *(4)*	0.200
		EXA●C80N, C90N	EXA●M10Y, M12Y, M12YH	**VW3AE0411** *(3)* **VW3AE0421** *(4)*	0.200
		EXA●M11N	EXA●M15Y, M15YH…M18YH	**VW3AE0413** *(3)* **VW3AE0421** *(4)*	0.200
		EXA●M13N, M15N	EXA●M18Y, M21Y, M21YH	**VW3AE0414** *(3)* **VW3AE0429** *(4)*	0.200
		EXA●M18N	EXA●M18Y, M24YH	**VW3AE0415** *(3)* **VW3AE0423** *(4)*	0.200
Enclosure heater *(5)*		EXC●D90N…C31N EXS5D90N…C31N	EXC●C11Y…C40Y	**VW3AE0501**	0.500
		EXC●C40N…C63N EXS5C40N…C63N EXA●C63N…C90N	EXC●C50Y…C80Y EXA●C80Y…M12Y	**VW3AE0502**	1.000
		EXA●M11N…M18N	EXA●M15Y…M24Y	**VW3AE0503**	1.500
Motor choke		EXC●D90N, C11N EXS5D90N, C11N	EXC●C11Y, C13Y EXS5C11Y, C13Y	**VW3AE0603**	17.000
		EXC●C13N, C16N EXS5C13N, C16N	EXC●C16Y, C20Y EXS5C16Y, C20Y	**VW3AE0604**	35.000
		EXC●C20N, C25N EXS5C20N, C25N	EXC●C25Y, C31Y EXS5C25Y, C31Y	**VW3AE0605**	64.000
		EXC●C31N EXS5C31N	EXC●C40Y EXS5C40Y	**VW3AE0606**	102.000
		EXC2C40N	EXC2C50Y	**VW3AE0626** *(2)*	192.000
		EXC5C40N	EXC5C50Y	**VW3AE0628** *(2)*	192.000
		EXS5C40N	EXS5C50Y	**VW3AE0630** *(2)*	197.000
		EXC2C50N, C63N	EXC2C63Y, C80Y	**VW3AE0627** *(2)*	234.000
		EXC5C50N, C63N	EXC5C63Y, C80Y	**VW3AE0629** *(2)*	234.000
		EXS5C50N, C63N	EXS5C63Y, C80Y	**VW3AE0631** *(2)*	234.000
		EXA●C63N…C90N	EXA●C80Y…M12Y EXA●C80YH...M12YH	**VW3AE0635**	132.000
		EXA●M11N…M18N	EXA●M15Y…M24Y EXA●M15YH...M24YH	**VW3AE0636**	264.000
200 mm plinth	Without option	EXC●D90N…C16N	EXC●C11Y…C20Y	**VW3AE0801**	11.000
		EXC●C20N…C31N	EXC●C25Y…C40Y	**VW3AE0802**	13.000
		EXC●C40N…C63N	EXC●C50Y…C80Y	**VW3AE0804**	17.000
		EXA●C63N…C90N	EXA●C80Y…M12Y	**VW3AE0820** *(6)*	38.000
		–	EXA●C80YH...M12YH	**VW3AE0835**	–
		EXA●M11N…M18N	EXA●M15Y…M24Y	**VW3AE0822**	69.000
		–	EXA●M15YH...M24YH	**VW3AE0836**	–
	With motor choke	EXC●D90N…C16N	EXC●C11Y…C20Y	**VW3AE0801**	11.000
		EXC●C20N…C31N	EXC●C25Y…C45Y	**VW3AE0802**	13.000
		EXC●C40N…C63N	EXC●C50Y…C80Y	**VW3AE0806**	26.000
		EXA●C63N…C90N	EXA●C80Y…M12Y	**VW3AE0820** *(6)*	38.000
		EXA●M11N…M18N	EXA●M15Y…M24Y	**VW3AE0822**	69.000
	With line choke	EXA●C63N…C90N	EXA●C80Y…M12Y	**VW3AE0820** *(6)*	38.000
		EXA●M11N…M18N	EXA●M15Y…M24Y	**VW3AE0824**	78.000
Plinth for braking unit		EXC●C20N…C63N	EXC●C25Y…C80Y	**VW3AE0810**	9.000

(1) For any other configuration, please contact our Customer Care Centre.
(2) These options may lead to modification of the size of the enclosure. Please refer to the dimensions on our website www.schneider-electric.com.
(3) For 6-pulse mounting.
(4) For 12-pulse mounting (not available for ATV61EXA●●●●YH).
(5) This option requires a 230 V ∼ supply, reference VW3AE1301.
(6) If a line contactor and choke are used, order reference VW3AE0821 (40.000 kg).

Product reference index

4

490NAD91103 1/59
490NAD91104 1/59
490NTW00002 1/58
490NTW00005 1/58
490NTW00012 1/58
490NTW00040 1/58
490NTW00080 1/58

A

ATV61E5075N4 1/20
ATV61E5D11N4 1/20
ATV61E5D15N4 1/20
ATV61E5D18N4 1/20
ATV61E5D22N4 1/20
ATV61E5D30N4 1/20
ATV61E5D37N4 1/20
ATV61E5D45N4 1/20
ATV61E5D55N4 1/20
ATV61E5D75N4 1/20
ATV61E5D90N4 1/20
ATV61E5U15N4 1/20
ATV61E5U22N4 1/20
ATV61E5U30N4 1/20
ATV61E5U40N4 1/20
ATV61E5U55N4 1/20
ATV61E5U75N4 1/20
ATV61ES5C11N4 2/5
ATV61ES5C13N4 2/5
ATV61ES5C16N4 2/5
ATV61ES5C22N4 2/5
ATV61ES5C25N4 2/5
ATV61ES5C31N4 2/5
ATV61ES5C40N4 2/5
ATV61ES5C50N4 2/5
ATV61ES5C63N4 2/5
ATV61ES5D90N4 2/5
ATV61EXA●C63N 2/10
ATV61EXA●C63N4 2/10
ATV61EXA●C71N4 2/10
ATV61EXA●C80N 2/10
ATV61EXA●C80Y 2/11
ATV61EXA●C90N 2/10
ATV61EXA●C90N4 2/10
ATV61EXA●M10Y 2/11
ATV61EXA●M11N 2/10
ATV61EXA●M11N4 2/10
ATV61EXA●M12Y 2/11
ATV61EXA●M13N 2/10
ATV61EXA●M13N4 2/10
ATV61EXA●M14N4 2/10
ATV61EXA●M15N 2/10
ATV61EXA●M15Y 2/11
ATV61EXA●M18N 2/10
ATV61EXA●M18Y 2/11
ATV61EXA●M21Y 2/11
ATV61EXA●M24Y 2/11
ATV61EXA2C80YH 2/7
ATV61EXA2M10YH 2/7
ATV61EXA2M12YH 2/7
ATV61EXA2M15YH 2/7
ATV61EXA2M18YH 2/7
ATV61EXA2M21YH 2/7
ATV61EXA2M24YH 2/7
ATV61EXA5C80YH 2/7
ATV61EXA5M10YH 2/7
ATV61EXA5M12YH 2/7
ATV61EXA5M15YH 2/7
ATV61EXA5M18YH 2/7
ATV61EXA5M21YH 2/7
ATV61EXA5M24YH 2/7
ATV61EXC2C11N 2/14
ATV61EXC2C11N4 2/14
ATV61EXC2C11N4H 2/7
ATV61EXC2C11Y 2/15
ATV61EXC2C13N 2/14
ATV61EXC2C13N4 2/14
ATV61EXC2C13N4H 2/7
ATV61EXC2C13Y 2/15
ATV61EXC2C16N 2/14
ATV61EXC2C16N4 2/14
ATV61EXC2C16N4H 2/7
ATV61EXC2C16Y 2/15
ATV61EXC2C20N 2/14
ATV61EXC2C20Y 2/15
ATV61EXC2C22N4 2/14
ATV61EXC2C22N4H 2/7
ATV61EXC2C25N 2/14
ATV61EXC2C25N4 2/14
ATV61EXC2C25N4H 2/7
ATV61EXC2C25Y 2/15
ATV61EXC2C31N 2/14
ATV61EXC2C31N4 2/14
ATV61EXC2C31N4H 2/7
ATV61EXC2C31Y 2/15
ATV61EXC2C40N 2/14
ATV61EXC2C40N4 2/14
ATV61EXC2C40N4H 2/7
ATV61EXC2C40Y 2/15
ATV61EXC2C50N 2/14
ATV61EXC2C50N4 2/14
ATV61EXC2C50N4H 2/7
ATV61EXC2C50Y 2/15
ATV61EXC2C63N 2/14
ATV61EXC2C63N4 2/14
ATV61EXC2C63N4H 2/7
ATV61EXC2C63Y 2/15
ATV61EXC2C80Y 2/15
ATV61EXC2D55N4H 2/7
ATV61EXC2D75N4H 2/7
ATV61EXC2D90N 2/14
ATV61EXC2D90N4 2/14
ATV61EXC2D90N4H 2/7
ATV61EXC5C11N 2/14
ATV61EXC5C11N4 2/14
ATV61EXC5C11N4H 2/7
ATV61EXC5C11Y 2/15
ATV61EXC5C13N 2/14
ATV61EXC5C13N4 2/14
ATV61EXC5C13N4H 2/7
ATV61EXC5C13Y 2/15
ATV61EXC5C16N 2/14
ATV61EXC5C16N4 2/14
ATV61EXC5C16N4H 2/7
ATV61EXC5C16Y 2/15
ATV61EXC5C20N 2/14
ATV61EXC5C20Y 2/15
ATV61EXC5C22N4 2/14
ATV61EXC5C22N4H 2/7
ATV61EXC5C25N 2/14
ATV61EXC5C25N4 2/14
ATV61EXC5C25N4H 2/7
ATV61EXC5C25Y 2/15
ATV61EXC5C31N 2/14
ATV61EXC5C31N4 2/14
ATV61EXC5C31N4H 2/7
ATV61EXC5C31Y 2/15
ATV61EXC5C40N 2/14
ATV61EXC5C40N4 2/14
ATV61EXC5C40N4H 2/7
ATV61EXC5C40Y 2/15
ATV61EXC5C50N 2/14
ATV61EXC5C50N4 2/14
ATV61EXC5C50N4H 2/7
ATV61EXC5C50Y 2/15
ATV61EXC5C63N 2/14
ATV61EXC5C63N4 2/14
ATV61EXC5C63N4H 2/7
ATV61EXC5C63Y 2/15
ATV61EXC5C80Y 2/15
ATV61EXC5D55N4H 2/7
ATV61EXC5D75N4H 2/7
ATV61EXC5D90N 2/14
ATV61EXC5D90N4 2/14
ATV61EXC5D90N4H 2/7
ATV61EXS5C11N 2/10
ATV61EXS5C11N4 2/10
ATV61EXS5C11Y 2/11
ATV61EXS5C13N 2/10
ATV61EXS5C13N4 2/10
ATV61EXS5C13Y 2/11
ATV61EXS5C16N 2/10
ATV61EXS5C16N4 2/10
ATV61EXS5C16Y 2/11
ATV61EXS5C20N 2/10
ATV61EXS5C20Y 2/11
ATV61EXS5C22N4 2/10
ATV61EXS5C25N 2/10
ATV61EXS5C25N4 2/10
ATV61EXS5C25Y 2/11
ATV61EXS5C31N 2/10
ATV61EXS5C31N4 2/10
ATV61EXS5C31Y 2/11
ATV61EXS5C40N 2/10
ATV61EXS5C40N4 2/10
ATV61EXS5C40Y 2/11
ATV61EXS5C50N 2/10
ATV61EXS5C50N4 2/10
ATV61EXS5C50Y 2/11
ATV61EXS5C63N 2/10
ATV61EXS5C63N4 2/10
ATV61EXS5C63Y 2/11
ATV61EXS5C80Y 2/11
ATV61EXS5D90N 2/10
ATV61EXS5D90N4 2/10
ATV61H075M3 1/16
ATV61H075N4 1/17
ATV61HC11N4 1/17
ATV61HC11Y 1/21
ATV61HC13N4 1/17
ATV61HC13Y 1/21
ATV61HC16N4 1/17
ATV61HC16Y 1/21
ATV61HC20Y 1/21
ATV61HC22N4 1/17
ATV61HC25N4 1/17
ATV61HC25Y 1/21
ATV61HC31N4 1/17
ATV61HC31Y 1/21
ATV61HC40N4 1/17
ATV61HC40Y 1/21
ATV61HC50N4 1/17
ATV61HC50Y 1/21
ATV61HC63N4 1/17
ATV61HC63Y 1/21
ATV61HC80Y 1/21
ATV61HD11M3X 1/16
ATV61HD11N4 1/17
ATV61HD11Y 1/21
ATV61HD15M3X 1/16
ATV61HD15N4 1/17
ATV61HD15Y 1/21
ATV61HD18M3X 1/16
ATV61HD18N4 1/17
ATV61HD18Y 1/21
ATV61HD22M3X 1/16
ATV61HD22N4 1/17
ATV61HD22Y 1/21
ATV61HD30M3X 1/16
ATV61HD30N4 1/17
ATV61HD30Y 1/21
ATV61HD37M3X 1/16
ATV61HD37N4 1/17
ATV61HD37Y 1/21
ATV61HD45M3X 1/16
ATV61HD45N4 1/17
ATV61HD45Y 1/21
ATV61HD55M3X 1/16
ATV61HD55N4 1/17
ATV61HD55Y 1/21
ATV61HD75M3X 1/16
ATV61HD75N4 1/17
ATV61HD75Y 1/21
ATV61HD90M3X 1/16
ATV61HD90N4 1/17
ATV61HD90Y 1/21
ATV61HU15M3 1/16
ATV61HU15N4 1/17
ATV61HU22M3 1/16
ATV61HU22N4 1/17
ATV61HU22S6X 1/21
ATV61HU30M3 1/16
ATV61HU30N4 1/17
ATV61HU30S6X 1/21
ATV61HU30Y 1/21
ATV61HU40M3 1/16
ATV61HU40N4 1/17
ATV61HU40S6X 1/21
ATV61HU40Y 1/21
ATV61HU55M3 1/16
ATV61HU55N4 1/17
ATV61HU55S6X 1/21
ATV61HU55Y 1/21
ATV61HU75M3 1/16
ATV61HU75N4 1/17
ATV61HU75S6X 1/21
ATV61HU75Y 1/21
ATV61QC11N4 1/18
ATV61QC13N4 1/18
ATV61QC13Y 1/22
ATV61QC16N4 1/18
ATV61QC16Y 1/22
ATV61QC20N4 1/18
ATV61QC20Y 1/22
ATV61QC25N4 1/18
ATV61QC25Y 1/22
ATV61QC31N4 1/18
ATV61QC31Y 1/22
ATV61QC40N4 1/18
ATV61QC40Y 1/22
ATV61QC50N4 1/18
ATV61QC50Y 1/22
ATV61QC63N4 1/18
ATV61QC63Y 1/22
ATV61QC80Y 1/22
ATV61W075N4 1/19
ATV61W075N4C 1/19
ATV61WD11N4 1/19
ATV61WD11N4C 1/19
ATV61WD15N4 1/19
ATV61WD15N4C 1/19
ATV61WD18N4 1/19
ATV61WD18N4C 1/19
ATV61WD22N4 1/19
ATV61WD22N4C 1/19
ATV61WD30N4 1/19
ATV61WD30N4C 1/19
ATV61WD37N4 1/19
ATV61WD37N4C 1/19
ATV61WD45N4 1/19
ATV61WD45N4C 1/19
ATV61WD55N4 1/19
ATV61WD55N4C 1/19
ATV61WD75N4 1/19
ATV61WD75N4C 1/19
ATV61WD90N4 1/19
ATV61WD90N4C 1/19
ATV61WU15N4 1/19
ATV61WU15N4C 1/19
ATV61WU22N4 1/19
ATV61WU22N4C 1/19
ATV61WU30N4 1/19
ATV61WU30N4C 1/19
ATV61WU40N4 1/19
ATV61WU40N4C 1/19
ATV61WU55N4 1/19
ATV61WU55N4C 1/19
ATV61WU75N4 1/19
ATV61WU75N4C 1/19

L

LU9GC3 1/32
1/57

T

TCSCTN023F13M03 1/56
TCSCTN026M16M 1/56

Schneider Electric

Product reference index

TSXCANCA100 1/53 1/56
TSXCANCA300 1/53 1/56
TSXCANCA50 1/53 1/56
TSXCANCB100 1/53 1/56
TSXCANCB300 1/53 1/56
TSXCANCB50 1/53 1/56
TSXCANCD100 1/53 1/56
TSXCANCD50 1/53
TSXCANCD300 1/53 1/56
TSXCANCD50 1/56
TSXCANKCDF180T 1/53
TSXPBSCA100 1/59
TSXPBSCA400 1/59
TSXSCA62 1/58

V

VW3A1101 1/31
VW3A1102 1/31 1/32
VW3A1103 1/31
VW3A1104R10 1/31 1/32
VW3A1104R100 1/31 1/32
VW3A1104R30 1/31 1/32
VW3A1104R50 1/31 1/32
VW3A1105 1/31
VW3A3101 1/29
VW3A3201 1/47
VW3A3202 1/47
VW3A3303 1/58
VW3A3304 1/58
VW3A3307 1/59
VW3A3307S371 1/59
VW3A3309 1/58
VW3A3310D 1/58
VW3A3312 1/59
VW3A3314 1/59
VW3A3316 1/58
VW3A3317 1/58
VW3A3318 1/59
VW3A3319 1/59
VW3A3320 1/58
VW3A3321 1/59
VW3A3326 1/59
VW3A3327 1/59
VW3A3401 1/46
VW3A3403 1/46
VW3A3404 1/46
VW3A3405 1/46
VW3A3406 1/46
VW3A3407 1/46
VW3A3501 1/53
VW3A3502 1/49
VW3A3503 1/49
VW3A3E101 2/16
VW3A3E201 2/16
VW3A3E202 2/16
VW3A3E302 2/16
VW3A3E303 2/16
VW3A3E304 2/16
VW3A3E307 2/16
VW3A3E307S371 2/16
VW3A3E309 2/16
VW3A3E310D 2/16
VW3A3E312 2/16
VW3A3E313 2/16
VW3A3E314 2/16
VW3A3E316 2/16
VW3A3E317 2/16
VW3A3E319 2/16
VW3A3E401 2/16
VW3A3E403 2/16
VW3A3E404 2/16
VW3A3E405 2/16
VW3A3E406 2/16
VW3A3E407 2/16
VW3A3E501 2/16
VW3A3E502 2/16
VW3A3E503 2/16
VW3A4401 1/81
VW3A4402 1/81
VW3A4403 1/81
VW3A4404 1/81
VW3A4405 1/81
VW3A4406 1/81
VW3A4407 1/81
VW3A4408 1/81
VW3A4410 1/81
VW3A4411 1/81
VW3A4412 1/81
VW3A4413 1/81
VW3A4501 1/65
VW3A4502 1/65
VW3A4503 1/65
VW3A4504 1/65
VW3A4505 1/65
VW3A4506 1/65
VW3A4507 1/65
VW3A4508 1/65
VW3A4509 1/65
VW3A4510 1/65
VW3A4511 1/65
VW3A4512 1/65
VW3A4551 1/67 1/68
VW3A4552 1/67 1/68
VW3A4553 1/67 1/68
VW3A4554 1/67 1/68
VW3A4555 1/67 1/68
VW3A4556 1/67 1/68
VW3A4557 1/67
VW3A4558 1/67
VW3A4559 1/67
VW3A4560 1/67 1/68
VW3A4561 1/67
VW3A4563 1/67
VW3A4564 1/67
VW3A4565 1/67
VW3A4568 1/67 1/68
VW3A4569 1/67
VW3A4570 1/68
VW3A4571 1/68
VW3A4572 1/68
VW3A4573 1/67
VW3A46101 1/70
VW3A46102 1/70
VW3A46103 1/70
VW3A46104 1/70
VW3A46105 1/70
VW3A46106 1/70
VW3A46107 1/70
VW3A46108 1/70
VW3A46109 1/70
VW3A46110 1/70
VW3A46111 1/70
VW3A46112 1/70
VW3A46113 1/70
VW3A46114 1/70
VW3A46115 1/70
VW3A46116 1/70
VW3A46117 1/70
VW3A46118 1/70
VW3A46119 1/70
VW3A46120 1/71 1/72
VW3A46121 1/71 1/72
VW3A46122 1/71 1/72
VW3A46123 1/71 1/72
VW3A46124 1/71 1/72
VW3A46125 1/71 1/72
VW3A46126 1/71 1/72
VW3A46127 1/71 1/72
VW3A46128 1/71 1/72
VW3A46129 1/71 1/72
VW3A46130 1/71 1/72
VW3A46131 1/71 1/72
VW3A46132 1/72
VW3A46133 1/72
VW3A46134 1/72
VW3A46135 1/72
VW3A46136 1/72
VW3A46137 1/72
VW3A46138 1/72
VW3A46139 1/73
VW3A46140 1/73
VW3A46141 1/73
VW3A46142 1/73
VW3A46143 1/73
VW3A46144 1/73
VW3A46145 1/73
VW3A46146 1/73
VW3A46147 1/73
VW3A46148 1/73
VW3A46149 1/73
VW3A46150 1/73
VW3A46151 1/73
VW3A46152 1/73
VW3A46153 1/73
VW3A46154 1/73
VW3A46155 1/73
VW3A46156 1/73
VW3A46157 1/73
VW3A46158 1/74 1/75
VW3A46159 1/74 1/75
VW3A46160 1/74 1/75
VW3A46161 1/74 1/75
VW3A46162 1/74 1/75
VW3A46163 1/74 1/75
VW3A46164 1/74 1/75
VW3A46165 1/74 1/75
VW3A46166 1/74 1/75
VW3A46167 1/74 1/75
VW3A46168 1/74 1/75
VW3A46169 1/74 1/75
VW3A46170 1/75
VW3A46171 1/75
VW3A46172 1/75
VW3A46173 1/75
VW3A46174 1/75
VW3A46175 1/75
VW3A46176 1/75
VW3A5101 1/84
VW3A5102 1/84 1/85
VW3A5103 1/84 1/85
VW3A5104 1/84 1/85
VW3A5105 1/84 1/85
VW3A5106 1/84 1/85
VW3A5107 1/84 1/85
VW3A5108 1/84 1/85
VW3A5201 1/87
VW3A5202 1/87
VW3A5203 1/87
VW3A5204 1/87
VW3A5205 1/87
VW3A5206 1/87
VW3A5207 1/87
VW3A5208 1/87
VW3A5209 1/87
VW3A5210 1/87
VW3A5211 1/87
VW3A5212 1/87
VW3A5213 1/87
VW3A5214 1/87
VW3A58501 1/67
VW3A58502 1/67
VW3A7101 1/60
VW3A7102 1/60
VW3A7103 1/60
VW3A7104 1/60
VW3A7250 1/77 1/78
VW3A7251 1/77 1/78
VW3A7253 1/77
VW3A7254 1/77 1/78
VW3A7255 1/77 1/78
VW3A7256 1/77
VW3A7257 1/77
VW3A7258 1/77 1/78
VW3A7260 1/77 1/78
VW3A7261 1/77 1/78
VW3A7262 1/77 1/78
VW3A7263 1/79
VW3A7264 1/79
VW3A7265 1/77 1/78
VW3A7266 1/77 1/78
VW3A7267 1/77 1/78
VW3A7268 1/79
VW3A7269 1/79
VW3A7270 1/79
VW3A7271 1/79
VW3A7272 1/79
VW3A7273 1/79
VW3A7274 1/79
VW3A7275 1/79
VW3A7276 1/79
VW3A7277 1/79
VW3A7278 1/79
VW3A7283 1/78
VW3A7286 1/78
VW3A7287 1/78
VW3A7701 1/61 1/62 1/63
VW3A7702 1/61 1/62 1/63
VW3A7703 1/61 1/62 1/63
VW3A7704 1/61 1/62 1/63
VW3A7705 1/61 1/62 1/63
VW3A7706 1/61 1/62
VW3A7707 1/61 1/62 1/63
VW3A7708 1/61
VW3A7709 1/61
VW3A7710 1/62
VW3A7711 1/62
VW3A7712 1/62
VW3A7713 1/61
VW3A7714 1/61
VW3A7715 1/62
VW3A7716 1/62
VW3A7716 1/63
VW3A7717 1/62
VW3A7717 1/63
VW3A7718 1/62
VW3A7718 1/63
VW3A7805 1/63
VW3A7806 1/63
VW3A7806 1/63

Product reference index

VW3A7814 1/63
VW3A7816 1/63
VW3A7E101 2/18
VW3A7E102 2/18
VW3A7E103 2/22
VW3A7E104 2/22
VW3A8106 1/53
VW3A8120 1/33
VW3A8121 1/33
VW3A83062 1/58
VW3A8306R 1/57
VW3A8306R03 1/32 1/57
VW3A8306R10 1/32 1/57
VW3A8306R30 1/32 1/57
VW3A8306RC 1/32 1/57
VW3A8306TF03 1/32 1/57
VW3A8306TF10 1/32 1/57
VW3A9101 1/27
VW3A9102 1/27
VW3A9103 1/27
VW3A9104 1/27
VW3A9105 1/27
VW3A9106 1/27
VW3A9107 1/27
VW3A9108 1/27
VW3A9109 1/27
VW3A9110 1/27
VW3A9111 1/27
VW3A9112 1/27
VW3A9113 1/27
VW3A9114 1/27
VW3A9115 1/27
VW3A9116 1/27
VW3A9117 1/27
VW3A9201 1/26
VW3A9202 1/26
VW3A9203 1/26
VW3A9204 1/26
VW3A9205 1/26
VW3A9206 1/26
VW3A9207 1/26
VW3A9208 1/26
VW3A9209 1/26
VW3A9210 1/26
VW3A9211 1/26
VW3A9212 1/26
VW3A9213 1/26
VW3A9214 1/26
VW3A9217 1/26
VW3A9302 1/30
VW3A9304 1/30
VW3A9305 1/30
VW3A9306 1/30
VW3A9307 1/30
VW3A9308 1/30
VW3A9309 1/30
VW3A9310 1/30
VW3A9312 1/30
VW3A9404 1/28
VW3A9405 1/28
VW3A9406 1/28
VW3A9407 1/28
VW3A9501 1/25
VW3A9502 1/25
VW3A9503 1/25
VW3A9504 1/25
VW3A9505 1/25
VW3A9506 1/25
VW3A9507 1/25
VW3A9508 1/25
VW3A9509 1/25
VW3A9510 1/25
VW3A9511 1/25
VW3A9512 1/25
VW3A9513 1/25
VW3A9514 1/25
VW3A9515 1/25
VW3A9541 2/3
VW3A9542 2/3
VW3A9543 2/3
VW3A9544 2/3
VW3A9545 2/3
VW3A9546 2/3
VW3A9547 2/3
VW3A9548 2/3
VW3A9549 2/3
VW3A9550 2/3
VW3A9551 2/3
VW3A9612 1/85
VW3A9613 1/85
VW3A9901 1/29
VW3A9902 1/29
VW3A9903 1/29
VW3A9904 1/29
VW3A9905 1/29
VW3A9906 1/29
VW3A9907 1/29
VW3A9908 1/29
VW3A9909 1/29
VW3A9910 1/29
VW3AE0103 2/18 2/22
VW3AE0104 2/18 2/22
VW3AE0105 2/18 2/22
VW3AE0110 2/18
VW3AE0114 2/18 2/22
VW3AE0115 2/18 2/22
VW3AE0116 2/18 2/22
VW3AE0141 2/18 2/22
VW3AE0142 2/18 2/22
VW3AE0143 2/18 2/22
VW3AE0146 2/18 2/22
VW3AE0147 2/18 2/22
VW3AE0148 2/18 2/22
VW3AE0150 2/22
VW3AE0151 2/18 2/22
VW3AE0152 2/22
VW3AE0169 2/18 2/22
VW3AE0170 2/18 2/22
VW3AE0171 2/18 2/22
VW3AE0172 2/18 2/22
VW3AE0173 2/18 2/22
VW3AE0190 2/18
VW3AE0205 2/22
VW3AE0206 2/19 2/22
VW3AE0207 2/19
VW3AE0208 2/19 2/22
VW3AE0209 2/19 2/22
VW3AE0210 2/19 2/22
VW3AE0211 2/19 2/22
VW3AE0212 2/22
VW3AE0213 2/19 2/22
VW3AE0214 2/19
VW3AE0216 2/19
VW3AE0218 2/19 2/22
VW3AE0224 2/19
VW3AE0226 2/22
VW3AE0227 2/19 2/22
VW3AE0302 2/19
VW3AE0303 2/19
VW3AE0404 2/19 2/23
VW3AE0406 2/19 2/23
VW3AE0409 2/19 2/23
VW3AE0411 2/19 2/23
VW3AE0413 2/19 2/23
VW3AE0414 2/19 2/23
VW3AE0415 2/19 2/23
VW3AE0421 2/19 2/23
VW3AE0423 2/19 2/23
VW3AE0426 2/19 2/23
VW3AE0427 2/19 2/23
VW3AE0428 2/23
VW3AE0429 2/19 2/23
VW3AE0501 2/20 2/23
VW3AE0502 2/20 2/23
VW3AE0503 2/20 2/23
VW3AE0504 2/20
VW3AE0603 2/20 2/23
VW3AE0604 2/20 2/23
VW3AE0605 2/20 2/23
VW3AE0606 2/20 2/23
VW3AE0608 2/20
VW3AE0609 2/20
VW3AE0610 2/20
VW3AE0612 2/20
VW3AE0613 2/20
VW3AE0614 2/20
VW3AE0615 2/20
VW3AE0616 2/20
VW3AE0617 2/20
VW3AE0618 2/20
VW3AE0619 2/20
VW3AE0621 2/20
VW3AE0623 2/20
VW3AE0624 2/20
VW3AE0625 2/20
VW3AE0626 2/23
VW3AE0627 2/23
VW3AE0628 2/23
VW3AE0629 2/23
VW3AE0630 2/23
VW3AE0631 2/23
VW3AE0635 2/20 2/23
VW3AE0636 2/20 2/23
VW3AE0641 2/20
VW3AE0643 2/20
VW3AE0644 2/20
VW3AE0646 2/20
VW3AE0648 2/20
VW3AE0650 2/20
VW3AE0651 2/20
VW3AE0652 2/20
VW3AE0653 2/20
VW3AE0655 2/20
VW3AE0656 2/20
VW3AE0658 2/20
VW3AE0660 2/20
VW3AE0662 2/20
VW3AE0663 2/20
VW3AE0664 2/20
VW3AE0665 2/20
VW3AE0667 2/20
VW3AE0668 2/20
VW3AE0670 2/20
VW3AE0672 2/20
VW3AE0674 2/20
VW3AE0675 2/20
VW3AE0676 2/20
VW3AE0801 2/21 2/23
VW3AE0802 2/21 2/23
VW3AE0803 2/21
VW3AE0804 2/21 2/23
VW3AE0805 2/21
VW3AE0806 2/21 2/23
VW3AE0807 2/21
VW3AE0810 2/21 2/23
VW3AE0816 2/21
VW3AE0817 2/21
VW3AE0820 2/21 2/23
VW3AE0822 2/21 2/23
VW3AE0824 2/21 2/23
VW3AE0827 2/21
VW3AE0828 2/21
VW3AE0829 2/21
VW3AE0830 2/21
VW3AE0831 2/21
VW3AE0832 2/21
VW3AE0835 2/23
VW3AE0836 2/23
VW3AE1003 2/18
VW3AE1004 2/22
VW3AE1005 2/22
VW3AE1201 2/17
VW3AE1202 2/17
VW3AE1301 2/17
VW3AE1401 2/17
VW3AE1402 2/17
VW3AE1501 2/17
VW3AE1502 2/17
VW3AE1503 2/17
VW3AE1601 2/17
VW3AE1801 2/17
VW3AE1901 2/17
VW3AE1902 2/17
VW3AE2001 2/17
VW3AE2002 2/17
VW3AE2003 2/17
VW3AE2004 2/17
VW3AE2005 2/17
VW3AE2101 2/17
VW3AE2102 2/17
VW3AE2201 2/17
VW3AE2301 2/17
VW3AE2302 2/17
VW3AE2303 2/17
VW3AE2415 2/22
VW3AE2416 2/19 2/22
VW3AE2418 2/19 2/22
VW3AE2419 2/19 2/22
VW3AE2420 2/19 2/22
VW3AE2501 2/19
VW3AE2502 2/19
VW3AE2503 2/19
VW3AE2504 2/23
VW3AE2505 2/23
VW3AE2506 2/23
VW3AE2507 2/23
VW3AE2508 2/23
VW3AE2509 2/23
VW3AE2601 2/17
VW3AE2701 2/17
VW3AE2901 2/17
VW3AE3001 2/17
VW3CANA71 1/53 1/56
VW3CANCARR03 1/56
VW3CANCARR1 1/56
VW3CANKCDF180T 1/56

Schneider Electric Industries SAS

Head Office
35, rue Joseph Monier
F-92500 Rueil-Malmaison
France

www.schneider-electric.com

The information provided in this documentation contains general descriptions and/or technical characteristics of the performance of the products contained herein. This documentation is not intended as a substitute for and is not to be used for determining suitability or reliability of these products for specific user applications. It is the duty of any such user or integrator to perform the appropriate and complete risk analysis, evaluation and testing of the products with respect to the relevant specific application or use thereof. Neither Schneider Electric nor any of its affiliates or subsidiaries shall be responsible or liable for misuse of the information contained herein.

Design: Schneider Electric
Photos: Schneider Electric
Printed by:

DIA2ED2140406EN

April 2014