Variable speed drives Altivar 12

For 3-phase asynchronous motors
from 0.18 to 4 kW/0.25 to 5 HP

Catalog

January 2015

Schneider Electric

How can you fit a 6000-page catalog in your pocket ?

Schneider Electric provides you with the complete set of industrial automation catalogs all on a handy USB key for PC or in an application for tablets

Digi-Cat, a handy USB key for PC

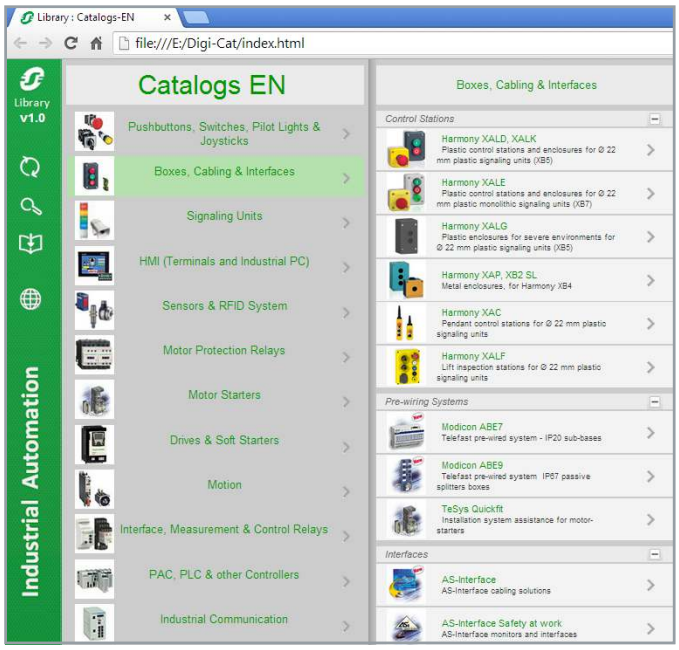

- Convenient to carry
- Always up-to-date
- Environmentally friendly
- Easy-to-share format

Contact your local representative to get your own Digi-Cat

e-Library, the app for tablets

If you have an iPad®:

- Go to the App Store and search for e-Library
- or scan the QR code

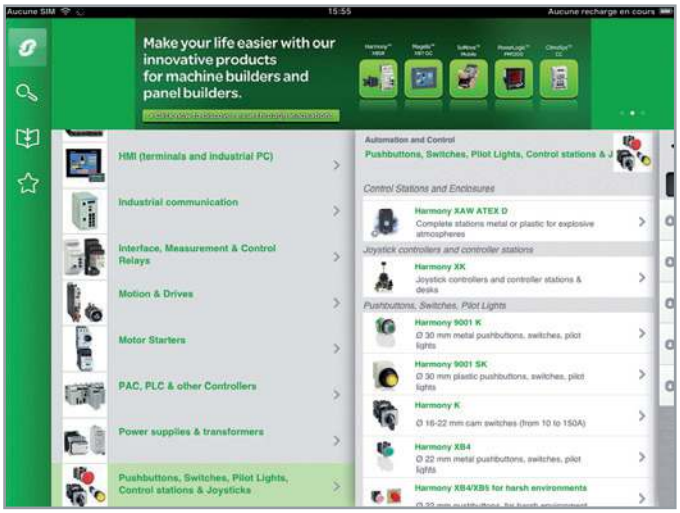

If you have an Android tablet:

- Go to the Google Play Store™ and search for eLibrary
- or scan the QR code

Contents

Variable speed drives Altivar 12

■ **Brochure** . . . . . page 2

IP 20 or IP 21 variable speed drives for asynchronous and synchronous motors selection guide . . . . . page 6

IP 54 or IP 55 variable speed drives for asynchronous and synchronous motors selection guide . . . . . page 8

Variable speed drives Altivar 61 Plus and Altivar 71 Plus selection guide. . . . . . page 10

■ **Presentation of the Altivar 12 speed drives**

□ Presentation . . . . . page 12

□ Applications . . . . . page 12

□ Functions . . . . . page 13

□ An optimized offer . . . . . page 13

□ Complementary characteristics . . . . . page 14

■ **References**

□ Drives with heatsink . . . . . page 16

□ Drives on a base plate . . . . . page 17

□ Accessories . . . . . page 18

□ Configuration tools . . . . . page 19

□ Remote display terminals and associated cordsets . . . . . page 20

□ Additional EMC input filters . . . . . page 20

□ Motor chokes . . . . . page 21

□ Ferrite suppressors . . . . . page 21

□ Modbus serial links . . . . . page 21

□ Replacement parts . . . . . page 21

■ **Motor starters**

□ Applications . . . . . page 22

□ Motor starters . . . . . page 22

□ Combinations . . . . . page 23

■ **Product reference index** . . . . . page 24

Designing technology that frees you from technical tasks

Small + Intuitive

Reliable + High-performance

With the Altivar 12, you get greater reliability and simplicity of operation and save even more time for all your applications.

- The smallest drive with integrated EMC for compact machines
- Ever more intuitive and user-friendly programming and menus
- Can be configured in complete safety with the power off, even in its packaging
- A design that can withstand even the harshest environments
- Quick and simple to set up
- With no compromise on quality, and components designed to last 10 years

Collaborative design
We surveyed our customers and users to determine their needs. The result is the innovative Altivar 12.

Make the most of your energy

Combining efficiency with intelligence

The Altivar 12 is particularly suitable for use in applications involving simple industrial machines or certain consumer machines. Its compact size, high performance and discreet appearance make it particularly attractive for use in the following sectors:

- The food industry (ventilation of catering kitchens, bagging machines, bakers' kneading machines, greenhouses, etc.)
- Small handling applications (car washes, conveyors, etc.)
- The medical and health sector (medical beds, fitness machines)
- Machines with a single-phase socket (wood-working machines, surface polishing and cleaning machines, swimming pool or irrigation pumps, hydromassage bathtubs, etc.)
- New markets (solar applications, etc.)
- Simple mechanical applications (2-speed motors, DC motors, mechanical drives, etc.)

A design focussed on integration

- Upgrade your machines and make them more competitive: with its advanced functions (integrated PID, multi-speed) the Altivar 12 increases your productivity
- Communicate easily with all the other parts of your machine via the integrated universal Modbus serial link
- Reduce the depth of your equipment: the baseplate mounted version dissipates heat into the machine frame

Small

The small format and advanced functions of the Altivar 12 mean that it can easily replace any existing drive in its category.

Economical

- Design: Save time by using the SoMove software workshop
- Commissioning: Quicker configuration with the power off download function
- Wiring and mounting: Quicker and easier installation with integrated Modbus communication

Choose peace of mind

The Altivar 12 integrates as standard all the technologies that will make you forget it is there. Its design and choice of components make the Altivar 12 an extremely efficient, reliable and durable drive.

No compromise on quality

- Ever higher performance for your motors assured by:
  - The factory settings, which provide a high quality drive from the very first time the power is turned on
  - The integration of Standard (U/f), Performance (sensorless flux vector control, or SVC) and Pump/Fan (quadratic profile Kn^2) control profiles
  - High dynamic performance on acceleration as well as on braking
  - Excellent speed regulation on machine load surges
- Reduced noise and maintenance:
  - No fan on models up to 0.75 kW at 240 V
  - Cassette type fan, operates automatically on detection of specific temperature setting
- Designed for easy fitting and wiring of the drive:
  - A single tool
  - Power terminals not tightened, ready for wiring
  - Easy access angles
  - Numerous, easy to identify markings
- Fast detection and protection against the motor current peaks associated with certain applications (motor switching, catching on the fly, etc.)
- Perfect integration of single-phase 240 V model into the electrical network thanks to its built-in EMC filter

Sturdy

- New generation long-life components (10-year service life under normal operating conditions)
- Cards are coated as standard and resistance to disturbed power supplies has been increased to withstand harsh environments

The fan, which is the only wearing part, can be changed without the need for any tool.

Practical, recyclable packaging. You can configure your product in its packaging without breaking the guarantee seal.

Easy to identify

- All the identification markings on the product are on a hinged door on the front panel
- Easy identification of the connections

Ecological

- An average of 30% energy savings (with the Pump/Fan control profile) for the majority of applications
- Less cardboard to be recycled - only one box is used for bulk orders

Energy Efficiency

Communicate intuitively with all your applications

The Altivar 12 is immediately operational. It is configured using the notched wheel or from the SoMove software workshop. The file that is generated can be downloaded to the product even while it is still in its packaging, using the Multi-Loader console. You save commissioning time so that you can spend more time doing your job.

Fast

With the Multi-Loader console you can configure 10 drives in their packaging is less than 5 minutes, with no power supply!

Save time on commissioning

- The drive can be configured before it is received (by the distributor), during storage (by the storekeeper) or during fitting before the electrical enclosure is powered up for the first time
- No adjustment is required and there is a quick start guide for immediate setup
- Work in the language of your choice with the SoMove software workshop that can be downloaded free of charge from www.schneider-electric.com
- Select the functions you need from the menu
- Bluetooth option for PC for greater ease of use

Save time on wiring

- Easy access to all the wiring and adjustment functions on the front panel via a sealable hinged door
- Integrated EMC filter in 240 V single-phase versions
- No need to remove the terminal cover to wire the power section
- Only one screwdriver needed for wiring both the control and power sections
- Less wiring due to the integrated Modbus communication

Save time on programming

- A navigation button for easy menu access: you can set the parameters of your application with just a few clicks
- A three-level tree structure
- Reference Mode: In local operation (On/Off buttons) and for speed adjustment and display
- Monitoring Mode: For displaying parameters
- Configuration Mode: For configuring your applications and settings

Versatile

The Altivar 12 range is designed for 120 to 240 V power supplies. For your productivity requirements in the most varied applications, see the complete Altivar® range on our website: www.schneider-electric.com

Use SoMove to customise your menus and save time during operation (possible for up to 25 parameters)

IP 20 or IP 21 variable speed drives for asynchronous and synchronous motors

Type of machine		Simple machines		Pumps and fans (building (HVAC)) *(1)*
Power range for 50…60 Hz (kW/*HP*) line supply		**0.18…4/*0.25...5***	**0.18…15/*0.25...20***	**0.75…75/*1...100***
	Single-phase 100…120 V (kW/*HP*)	0.18…0.75/*0.25...1*	–	–
	Single-phase 200…240 V (kW/*HP*)	0.18…2.2/*0.25...3*	0.18…2.2/*0.25...3*	–
	Three-phase 200…230 V (kW/*HP*)	–	–	–
	Three-phase 200…240 V (kW/*HP*)	0.18…4/*0.25...5*	0.18…15/*0.25...20*	0.75…30/*1...40*
	Three-phase 380…480 V (kW/*HP*)	–	–	0.75…75/*1...100*
	Three-phase 380…500 V (kW/*HP*)	–	0.37…7.5/*0.5...10*	–
	Three-phase 500…600 V (kW/*HP*)	–	–	–
	Three-phase 525…600 V (kW/*HP*)	–	0.75…15/*1...20*	–
	Three-phase 500…690 V (kW/*HP*)	–	–	–
Degree of protection		IP 20	IP 21	
Type of cooling *(2)*		Heatsink or base plate	Heatsink	
Drive	Output frequency	0.1…400 Hz	0.1…500 Hz	0.5…200 Hz
	Type of control – Asynchronous motor	Standard (voltage/frequency) Performance (sensorless flux vector control) Pump/fan (Kn² quadratic ratio)	Standard (voltage/frequency) Performance (sensorless flux vector control) Energy saving ratio	Sensorless flux vector control Voltage/frequency ratio (2 points) Energy saving ratio
	Synchronous motor	–		
	Transient overtorque	150…170% of the nominal motor torque	170…200% of the nominal motor torque	120% of the nominal motor torque
Functions				
Number of functions		40	50	50
Number of preset speeds		8	16	7
Number of I/O	Analog inputs	1	3	2
	Logic inputs	4	6	3
	Analog outputs	1	1	1
	Logic outputs	1	–	–
	Relay outputs	1	2	2
Communication	Integrated	Modbus	Modbus and CANopen	Modbus, METASYS N2, APOGEE FLN, BACnet
	Available as an option	–	CANopen Daisy Chain, DeviceNet, PROFIBUS DP, Modbus TCP, Fipio	LonWorks
Cards (available as an option)		–		
Dialogue tools		IP 54 or IP 65 remote terminal	IP 54 or IP 65 remote terminal IP 54 remote graphic display terminal	IP 54 or IP 65 remote graphic display terminal
Configuration tools	Setup software	SoMove		PCSoft for ATV 212
	Configuration tools	Simple Loader, Multi-Loader		Multi-Loader
Standards and certifications		IEC 61800-5-1 IEC 61800-3 (environments 1 and 2, categories C1 to C3, cat. C1 with option for ATV 212)		
		CE, UL, CSA, C-Tick, NOM, GOST	CE, UL, CSA, DNV, C-Tick, NOM, GOST	EN 55011: Group 1, class A and class B with option card. CE, UL, CSA, C-Tick, NOM
References		**ATV 12**	**ATV 312**	**ATV 212**
Catalogues		"Altivar 12 variable speed drives"	"Altivar 312 variable speed drives"	"Altivar 212 variable speed drives"

(1) Heating, Ventilation and Air Conditioning

Pumps and fans (industrial)		Complex machines	
0.37…800/*0.5...900*		**0.37…630/*0.5...700***	
–		–	
0.37…5.5/*0.5...7.5*		0.37…5.5/*0.5...7.5*	
–		–	
0.75…90/*1...125*		0.37…75/*0.5...100*	
0.75…630/*1...900*		0.75…500/*1...700*	
–		–	
2.2…7.5/*3...10*		1.5…7.5/*2...10*	
–		–	
2.2…800/*3...800*		1.5…630/*2...700*	
IP 20			
Heatsink or water-cooled system		Heatsink, base plate or water-cooled system	
0.1…500 Hz for the entire range 0.1…599 Hz up to 37 kW/*50 HP* at 200…240 V ∿ and 380…480 V ∿		0.1…500 Hz for the entire range 0.1…599 Hz up to 37 kW/*50 HP* at 200…240 V ∿ and 380…480 V ∿	
Sensorless flux vector control Voltage/frequency ratio (2 or 5 points) Energy saving ratio		Flux vector control with or without sensor Voltage/frequency ratio (2 or 5 points) ENA System	
Vector control without speed feedback		Vector control with or without speed feedback	
120% of the nominal motor torque for 60 seconds		220% of the nominal motor torque for 2 seconds 170% for 60 seconds	
> 100		> 150	
8		16	
2…4		2…4	
6…20		6…20	
1…3		1…3	
0…8		0…8	
2…4		2…4	
Modbus and CANopen			
Modbus TCP Daisy Chain, Modbus/Uni-Telway, EtherNet/IP (RSTP), DeviceNet, PROFIBUS DP V0 and V1, InterBus, CC-Link, LonWorks, METASYS N2, APOGEE FLN, BACnet, Profinet, EtherCAT, POWERLINK		Modbus TCP Daisy Chain, Modbus/Uni-Telway, EtherNet/IP (RSTP), DeviceNet, PROFIBUS DP V0 and V1, InterBus, CC-Link, Profinet, EtherCAT, POWERLINK	
I/O extension cards, "Controller Inside" programmable card, multi-pump cards, encoder interface cards		Interface cards for incremental, resolver, SinCos, SinCos Hiperface®, EnDat® or SSI encoders, I/O extension cards, Controller Inside programmable card	
IP 54 or IP 65 remote graphic display terminal			
SoMove			
Simple Loader, Multi-Loader			
IEC 61800-5-1 IEC 61800-3 (environments 1 and 2, categories C1 to C3), IEC 61000-4-2/4-3/4-4/4-5/4-6/4-11			
CE, UL, CSA, DNV, C-Tick, NOM, GOST			
ATV 61		**ATV 71**	
"Altivar 61 variable speed drives"		"Altivar 71 variable speed drives"	

(2) The type of cooling depends on the model. Please consult pages 16 to 17.

IP 54 or IP 55 variable speed drives for asynchronous and synchronous motors

Type of machine			Simple machines	Pumps and fans (building (HVAC)) *(1)*
Power range for 50…60 Hz (kW/*HP*) line supply			**0.18…15/*0.25...20***	**0.75…75/*1...100***
	Single-phase 200…240 V (kW/*HP*)		0.18…*2.2/0.25...3*	–
	Three-phase 380…480 V (kW/*HP*)		–	0.75…*75/1...100*
	Three-phase 380…500 V (kW/*HP*)		0.37…15/*0.5...20*	–
Degree of protection			IP 55	IP 55
Variants			Enclosure user-definable up to 4 kW/*5 HP*: Vario switch disconnector, LEDs, selector switch, potentiometer	–
Drive	Output frequency		0.1…500 Hz	0.1…200 Hz
	Type of control	Asynchronous motor	Sensorless flux vector control Voltage/frequency ratio	Sensorless flux vector control Voltage/frequency ratio (2 points) Energy saving ratio
		Synchronous motor	–	–
	Transient overtorque		170…200% of the nominal motor torque	120% of the nominal motor torque for 60 seconds
Functions Number of functions			50	50
Number of preset speeds			16	7
Number of I/O	Analog inputs		3	2
	Logic inputs		6	3
	Analog outputs		1	1
	Logic outputs		–	–
	Relay outputs		2	2
Communication	Integrated		Modbus and CANopen	Modbus, METASYS N2, APOGEE FLN, BACnet
	Available as an option		Modbus TCP, Fipio, PROFIBUS DP, DeviceNet	LonWorks
Cards (available as an option)			–	–
Dialogue tools			IP 65 remote terminal	IP 54 or IP 65 remote graphic display terminal
Configuration tools	Setup software		SoMove	PCSoft for ATV 212 drive
	Configuration tool		Simple Loader	Multi-Loader
Standards and certifications			IEC 61800-5-1, IEC 61800-3 (environments 1 and 2, categories C1 to C3) CE, UL, CSA, C-Tick, GOST	
References			**ATV 31C**	**ATV 212W**
Catalogues			"Altivar 31C variable speed drives"	"Altivar 212 variable speed drives"

(1) Heating, Ventilation and Air Conditioning

Type of machine			Pumps and fans (industrial)		Complex machines	
Power range for 50…60 Hz (kW/*HP*) line supply			**0.75…90/*1...125***		**0.75…75/*1...100***	
	Single-phase 200…240 V (kW/*HP*)		–			
	Three-phase 380…480 V (kW/*HP*)		0.75…90/*1...125*		0.75…75/*1...100*	
	Three-phase 380…500 V (kW/*HP*)		–			
Degree of protection			IP 54			
Variants			–	Equipped with a Vario switch disconnector	–	Equipped with a Vario switch disconnector
Drive	Output frequency		0.1…599 Hz from 0.75 to 45 kW/*1...60 HP* 0.1…500 Hz from 55…90 kW/*75...125 HP*		0.1…599 Hz from 0.75 to 37 kW/*1...50 HP* 0.1…500 Hz from 45 to 75 kW/*60...100 HP*	
	Type of control	Asynchronous motor	Sensorless flux vector control Voltage/frequency ratio (2 or 5 points) Energy saving ratio		Sensorless flux vector control Voltage/frequency ratio (2 or 5 points) ENA System	
		Synchronous motor	Vector control without speed feedback		Vector control with or without speed feedback	
	Transient overtorque		110% of the nominal motor torque for 60 seconds		220% of the nominal motor torque for 2 seconds 170% for 60 seconds	
Functions Number of functions			>100		>150	
Number of preset speeds			8		16	
Number of I/O	Analog inputs		2…4		2…4	
	Logic inputs		6…20		6…20	
	Analog outputs		1…3		1…3	
	Logic outputs		0…8		0…8	
	Relay outputs		2…4		2…4	
Communication	Integrated		Modbus and CANopen			
	Available as an option		Modbus TCP Daisy Chain, Modbus/Uni-Telway, EtherNet/IP (RSTP), DeviceNet, PROFIBUS DP V0 and V1, InterBus, CC-Link, LonWorks, METASYS N2, APOGEE FLN, BACnet, Profinet, EtherCAT, POWERLINK		Modbus TCP Daisy Chain, Modbus/Uni-Telway, EtherNet/IP (RSTP), DeviceNet, PROFIBUS DP V0 and V1, InterBus, CC-Link, Profinet, EtherCAT, POWERLINK	
Cards (available as an option)			I/O extension cards, "Controller Inside" programmable card, multi-pump cards, encoder interface cards		Interface cards for incremental, resolver, SinCos, SinCos Hiperface®, EnDat® or SSI encoders, I/O extension cards, Controller Inside programmable card	
Dialogue tools			IP 54 or IP 65 remote graphic display terminal			
Configuration tools	Setup software		SoMove			
	Configuration tool		Simple Loader, Multi-Loader			
Standards and certifications			IEC 61800-5-1, IEC 61800-3 (environments 1 and 2, categories C1 to C3), IEC 61000-4-2/4-3/4-4/4-5/4-6/4-11 CE, UL, CSA, DNV, C-Tick, NOM, GOST			
References			**ATV 61W**	**ATV 61E5**	**ATV 71W**	**ATV 71E5**
Catalogues			"Altivar 61 variable speed drives"		"Altivar 71 variable speed drives"	

Variable speed drives
Altivar 61 Plus and Altivar 71 Plus
Integrated solutions

Type of machine	Pumps and fans (industrial)		
Power range for 50…60 Hz (kW/*HP*) line supply	**90…630/*125...900***	**90…800/*125...900***	**630…2400/*800...2500***
Three-phase 380…415 V (kW)	90...630	90...630	630...1400
Three-phase 480 V *(HP)*	*125...900*	*125...900*	*900...2000*
Three-phase 500 V (kW)	–	90...630	630...1800
Three-phase 600 V *(HP)*	–	*125...800*	*800...2500*
Three-phase 690 V (kW)	–	110...800	800...2400
Main characteristics	With enhanced protection		With enhanced protection and integrated cooling circuit
Variants	Ready to use	Standard offer Modular with integrated options User-definable on request	
Low Harmonic	–	Yes, only for ATV 61 Plus - LH	
Drive – Output frequency	0.1...500 Hz		
Type of control – Asynchronous motor	Sensorless flux vector control Voltage/frequency ratio 2 or 5 points Energy saving ratio		
Synchronous motor	Flux vector control without speed feedback		
Transient overtorque	120% of the nominal motor torque for 60 seconds		
Communication – Embedded	Modbus and CANopen		
As an option	Modbus TCP, Modbus/Uni-Telway, EtherNet/IP, DeviceNet, PROFIBUS DP V0 and V1, InterBus, CC-Link LonWorks, METASYS N2, APOGEE FLN, BACnet		
Cards (available as an option)	"Controller Inside" programmable card Multi-pump cards		
Degree of protection	IP 54 with separate air flows, **ATV61ES5**	IP 23 compact version, **ATV61EXC2** IP 54 compact version, **ATV61EXC5** IP 54 with separate air flows, **ATV61EXS5**	With integrated air-cooled circuit: IP 23: **ATV61EXA2** IP 54: **ATV61EXA5** With external water-cooled system: IP 55, on request
Type of drive	**ATV 61 Plus**	**ATV 61 Plus / ATV 61 Plus - LH**	
Catalogues	"Altivar 61 and Altivar 61 Plus variable speed drives"		

More technical information on www.schneider-electric.com

Complex machines (industrial and infrastructure)		
90…500/*125...700*	**90…630/*125...700***	**500…2000/*550...2100***
90…500	90…500	500…1300
125...700	*125...700*	*550...1800*
–	90…500	500…1500
–	*125...700*	*700...2100*
–	110…630	630…2000
With enhanced protection		With enhanced protection and integrated cooling circuit
Ready to use	Standard offer Modular with integrated options User-definable on request	
–	Yes, for power regeneration to the mains supply, only for ATV 71 Plus - LH	
0.1…500 Hz		
Flux vector control with or without sensor Voltage/frequency ratio (2 or 5 points) ENA System		
Vector control with or without speed feedback		
220% of the nominal motor torque for 2 seconds 170% of the nominal motor torque for 60 seconds		
Modbus and CANopen		
Modbus TCP, Modbus/Uni-Telway, EtherNet/IP, DeviceNet, PROFIBUS DP V0 and V1, InterBus, CC-Link		
"Controller Inside" programmable card		
IP 54 with separate air flows, **ATV71ES5**	IP 23 compact version, **ATV71EXC2** IP 54 compact version, **ATV71EXC5** IP 54 with separate air flows, **ATV71EXS5**	IP 23, with integrated air-cooled circuit, **ATV71EXA2** IP 54, with integrated air-cooled circuit, **ATV71EXA5** IP 55, with external water-cooled system (on request)
ATV 71 Plus	**ATV 71 Plus / ATV 71 Plus - LH**	
"Altivar 71 and Altivar 71 Plus variable speed drives"		

More technical information on www.schneider-electric.com

PF513412

ATV12 controlling an access barrier

PF513418

ATV12 controlling a mixer

Presentation

The Altivar 12 drive is a frequency inverter for three-phase 200…240 V asynchronous motors rated from 0.18 kW/0.25 HP to 4 kW/5 HP.

The Altivar 12's ease of installation, based on the principle of Plug&Play, its compact size, its integrated functions and its alternative base plate version make it particularly suitable for applications involving simple industrial machines and certain consumer machines.
By taking account of the constraints governing installation and use at the product design stage, we have been able to offer a cost-effective solution to manufacturers of compact simple machines (OEMs) and installers.

Examples of solutions provided:
- Drive factory-configured for start-up without the need for any adjustment
- Multi-Loader configuration tool for loading a configuration onto the drive without taking it out of its packaging
- Labelled terminals to reduce wiring time; drive identification on the front panel
- Alternative delivery option of multiple units in a single special package *(1)*. Like with the individually-shipped drives, it is possible to load a configuration into each drive without taking them out of the packaging.

Applications

Applications for simple industrial machines

- Handling (small conveyors, etc.)
- Packaging (small labelling machines, small bagging machines, etc.)
- Pumping applications (suction pumps, centrifugal pumps, circulating pumps, mono-pump and multi-pump stations, etc.)
- Machines equipped with a fan (air or smoke extraction, plastic film making machines, ovens, boilers, washing machines, etc.)

Applications for consumer machines

- Handling (access barriers, rotating advertising hoardings, etc.)
- Machines for health-related areas (medical beds, hydromassage equipment, running machines, etc.)
- Food and beverage industry machines (mills, kneading machines, mixers, etc.)

Other types of application

- Food and beverage industry (battery farming, greenhouses, etc.)
- Miscellaneous applications (mobile machines and small appliances equipped with a power socket, etc.)
- Applications which traditionally use other solutions:
  - 2-speed motor, DC motor, mechanical drive, etc.
  - Single-phase motor for pump and fan applications using mechanical control; the “Altivar 12 + three-phase motor” solution adapts the power to the requirements of the driving application, thus reducing energy consumption.

(1) Depending on the model (see page 16).

PF 513419

ATV12 controlling a pumping station

PF 513415

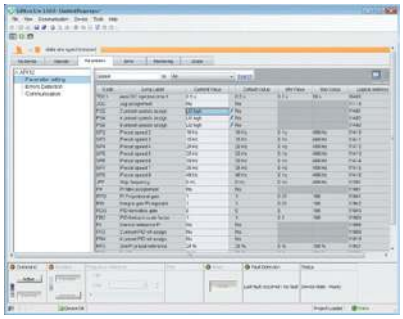

Preset speeds with SoMove

Drive with heatsink
ATV12H075M2

Drive on base plate
ATV12P075M2

ATV12H075M2 with door on front panel open

Functions

In addition to the functions usually available on this type of drive, the Altivar 12 drive also features the following:

Application functions *(1)*

- Switching between local control and control via the terminals
- Motor control profiles: standard, performance and pump/fan
- Frequency skip
- Preset speeds
- PID regulator
- S ramp, U ramp, ramp switching
- Freewheel stop, fast stop
- Jog operation
- Configuring the logic and analog I/O
- Underload and overload detection
- Viewing the state of the logic inputs on the drive display
- Configuring how the parameters are displayed
- Error log, etc.

Functions for pumping applications

- Sleep/wake-up
- PID functions
- Protection functions :
  - Protection against overloads and overcurrents in continuous operation (pump jamming)
  - Machine mechanical protection with control of operating direction
  - Protection of the installation by means of underload and overload detection

An optimized offer

The Altivar 12 range of variable speed drives extends across a range of motor power ratings from 0.18 kW/0.25 HP to 4 kW/5 HP on three types of power supply: Two standard versions are available:

- Drive with heatsink for normal environments and fan-cooled enclosure:
  - 100…120 V single-phase, 0.18 kW/0.25 HP to 0.75 kW/1 HP (**ATV12H●●●F1**)
  - 200…240 V single-phase, 0.18 kW/0.25 HP to 2.2 kW/3 HP (**ATV12H●●●M2**)
  - 200…240 V three-phase, 0.18 kW/0.25 HP to 4 kW/5 HP (**ATV12H●●●M3**)
- Drive on a base plate for mounting on the machine frame; the frame surface area should allow heat to dissipate:
  - 100…120 V single-phase, 0.18 kW/0.25 HP to 0.37 kW/0.5 HP (**ATV12H018F1, P037F1**)
  - 200…240 V single-phase, 0.18 kW/0.25 HP to 0.75 kW/1 HP (**ATV12H018M2, P●●●M2**)
  - 200…240 V three-phase, 0.18 kW/0.25 HP to 4 kW/5 HP (**ATV12H018M3, P●●●M3**)

***Note**: The Altivar 12 drive output voltage is 200…240 V three-phase, regardless of the type of drive line supply.*

The Altivar 12 drive integrates as standard the Modbus communication protocol, which can be accessed via the RJ45 connector located on the underside of the drive **1** with a 2-wire RS 485 physical interface. To communicate on the network, the Altivar 12 speed drive uses the Modbus RTU transmission mode. For more information on the complementary characteristics of the Modbus port (transmission speed, address, messaging...), please consult our website www.schneider-electric.com.

The entire range conforms to international standards IEC/EN 61800-5-1 and IEC/EN 61800-3, is UL, CSA, C-Tick, NOM, GOST certified and has been developed to meet the requirements of directives regarding the protection of the environment (RoHS, WEEE) as well as those of European Directives to obtain the CE mark.

(1) For the implementation of functions please consult the user manual on our website www.schneider-electric.com.

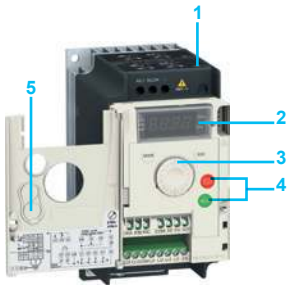

ATV12H075M2 with door on front panel open

An optimized offer (continued)

Electromagnetic compatibility (EMC)

The integration of a level C1 EMC filter in ATV12●●●●M2 drives and the handling of EMC simplify installation and make it very inexpensive to bring the device into conformity to obtain the CE mark.
This EMC filter can be disconnected via an internal switch 1.
This filter is conform to the IEC61800-3 standard, environnement 1, categories C1 and C2 depending on the model and on the motor cable length (see pages 16 and 17).

ATV12●●●●F1 and ATV12●●●●M3 drives are designed without an EMC filter. Filters are available as an option and can be installed by the customer to reduce the level of emissions (see page 18).The ATV12●●●●M2 speed drives can also have an additionnal filter (see page 19).

External accessories and options

External accessories and options can be used with Altivar 12 drives:
- EMC conformity kits, plates for direct mounting on 35 mm/1.38 in ⊥ rail, etc.
- Motor chokes, ferrite suppressors, additional EMC input filters, etc.

Multi-Loader configuration tool

Dialogue and configuration tools

Human-Machine Interface (HMI)

The 4-digit display 2 can be used to display states and faults, access parameters and modify them via the navigation button 3.
The RUN and STOP buttons 4 can be made accessible on the front panel by removing the blanking plate 5 from the door; they must be configured in order to be active.

Simple Loader and Multi-Loader configuration tools

The Simple Loader tool enables one powered-up drive's configuration to be duplicated on another powered-up drive.
The Multi-Loader tool enables configurations from a PC or drive to be copied and duplicated on another drive; the drives do not need to be powered up.

SoMove setup software

The SoMove setup software can be used with the Altivar 12 drive for configuration, adjustment, debugging (using the Oscilloscope function) and maintenance, just as it can for all other Schneider Electric variable speed drives and starters. It can also be used to customize the integrated display terminal menus. It can be used with a direct connection or a Bluetooth® wireless connection.

Remote display terminal

The Altivar 12 drive can be connected to a remote display terminal, available as an option. This terminal can be mounted on an enclosure door with IP 54 or IP 65 degree of protection. The maximum operating temperature is 50°C. It provides access to the same functions as the Human-Machine interface.

Remote terminal with cover closed

Remote terminal with cover open: RUN, FWD/REV and STOP buttons accessible

Complementary characteristics

The following characteristics complement those introduced in the selection guide on pages 6 to 9.

Environmental conditions

- IEC 60721-3-3 classes 3C3 and 3S2

Ambiant air temperature around the device in operation

- For ATV12H018F1, H037F1, H018M2...H075M2, H018M3...H075M3 and ATV12P●●●●● :
  - From -10°C to +40°C without derating
  - Up to +60°C, with the protective blanking cover removed and current derating of 2% per additional degree *(1)*
- For ATV12H075F1, 12HU15M2, HU22M2, 12HU15M3...HU40M3 :
  - From -10°C to +50°C without derating
  - Up to +60°C, with the protective blanking cover removed and current derating of 2% per additional degree *(1)*

(1) See the derating curves in the User Manual, available on our website at "www.schneider-electric.com".

Complementary characteristics (continued)

Analog input AI1

■ Voltage analog input: 0...5 V ⎓ (internal power supply only) or 0...10 V ⎓ , impedance 30 kΩ
■ Analog current input: X-Y mA by programming X and Y from 0…20 mA, impedance 250 Ω
Sampling time: < 10 ms
Resolution: 10 bits
Accuracy: ± 1% at 25°C
Linearity: ± 0.3% of the maximum scale value
Factory setting: Input configured as voltage type

Analog output AO1

1 software-configurable voltage or current analog output:
■ Analog voltage output: 0…10 V ⎓ , minimum load impedance 470 Ω
■ Analog current output: 0 to 20 mA, maximum load impedance 800 Ω
Update time: < 10 ms
Resolution: 8 bits
Accuracy: ± 1% at 25°C

Relay outputs R1A, R1B, R1C

1 protected relay output, 1 N/O contact and 1 N/C contact with common point
Response time: 30 ms maximum
Minimum switching capacity: 5 mA for 24 V ⎓
Maximum switching capacity:
■ On resistive load (cos φ = 1 and L/R = 0 ms): 3 A at 250 V ∿ or 4 A at 30 V ⎓
■ On inductive load (cos φ = 0.4 and L/R = 7 ms): 2 A at 250 V ∿ or 30 V ⎓

Logic inputs LI1...LI4

4 programmable logic inputs, compatible with PLC level 1, standard IEC/EN 61131-2
24 V ⎓ internal power supply or 24 V ⎓ external power supply (min. 18 V, max. 30 V)
Sampling time: < 20 ms
Sampling time tolerance: ± 1 ms
Factory-set with 2-wire control in "transition" mode for machine safety reasons:
■ LI1: forward
■ LI2…LI4: not assigned
Multiple assignment makes it possible to configure several functions on one input (for example: LI1 assigned to forward and preset speed 2, LI3 assigned to reverse and preset speed 3)
Impedance 3.5 kΩ

Logic outputs LO+, LO-

One 24 V ⎓ logic output assignable as positive logic (Source) or negative logic (Sink) open collector type, compatible with level 1 PLC, standard IEC/EN 61131-2
Maximum voltage: 30 V
Linearity: ± 1%
Maximum current: 10 mA (100 mA with external power supply)
Impedance: 1 kΩ
Update time: < 20 ms

Variable speed drives

Altivar 12

Drives with heatsink

PF080604F

ATV12H018M2

PF080607E

ATV12H075M2

PF080619F

ATV12HU40M3

PF080651A

ATV12HU15M2TQ (8)

Motor		Line supply				Altivar 12				
Power indicated on rating plate (1)		Max. line current (2)		Apparent power	Max. prospective line Isc	Maximum continuous output current (In) (1)	Maximum transient current for 60 s	Dissipated power at maximum output current (In) (1)	Reference	Weight (3)
		at U1	at U2	at U2		at U2				
kW	HP	A	A	kVA	kA	A	A	W		kg
Single-phase supply voltage: 100…120 V 50/60 Hz (4)										
0.18	0.25	6	5	0.6	1	1.4	2.1	18	**ATV12H018F1** (5)	0.700
0.37	0.5	11.4	9.3	1.1	1	2.4	3.6	29	**ATV12H037F1**	0.800
0.75	1	18.9	15.7	1.9	1	4.2	6.3	48	**ATV12H075F1**	1.300
Single-phase supply voltage: 200…240 V 50/60 Hz (4) (6)										
0.18	0.25	3.4	2.8	0.7	1	1.4	2.1	18	**ATV12H018M2** (5) (7) (10)	0.700
0.37	0.55	5.9	4.9	1.2	1	2.4	3.6	27	**ATV12H037M2** (7) (10)	0.700
0.55	0.75	8	6.7	1.6	1	3.5	5.3	34	**ATV12H055M2** (7) (10)	0.800
0.75	1	10.2	8.5	2	1	4.2	6.3	44	**ATV12H075M2** (7) (10)	0.800
1.5	2	17.8	14.9	3.6	1	7.5	11.2	72	**ATV12HU15M2** (8) (9)	1.400
2.2	3	24	20.2	4.8	1	10	15	93	**ATV12HU22M2** (8) (9)	1.400
Three-phase supply voltage: 200…240 V 50/60 Hz (4)										
0.18	0.25	2	1.7	0.7	5	1.4	2.1	16	**ATV12H018M3** (5)	0.700
0.37	0.55	3.6	3	1.2	5	2.4	3.6	24	**ATV12H037M3**	0.800
0.75	1	6.3	5.3	2.2	5	4.2	6.3	41	**ATV12H075M3**	0.800
1.5	2	11.1	9.3	3.9	5	7.5	11.2	73	**ATV12HU15M3**	1.200
2.2	3	14.9	12.5	5	5	10	15	85	**ATV12HU22M3**	1.200
3	–	19	15.9	6.6	5	12.2	18.3	94	**ATV12HU30M3**	2.000
4	5	23.8	19.9	8.3	5	16.7	25	128	**ATV12HU40M3**	2.000

Dimensions (overall)

Drives with heatsinks	W x H x D	
	EMC plate fixed	EMC plate not fixed
	mm	mm
ATV12H018F1, H018M2, H018M3	72 x 189.5 x 102.2	72 x 143 x 102.2
ATV12H037F1, H037M2, H037M3	72 x 189.5 x 121.2	72 x 143 x 121.2
ATV12H055M2, H075M2, H075M3	72 x 189.5 x 131.2	72 x 143 x 131.2
ATV12H075F1, HU15M2, HU22M2	105 x 188.2 x 156.2	105 x 142 x 156.2
ATV12HU15M3, HU22M3	105 x 189.3 x 131.2	105 x 143 x 131.2
ATV12HU30M3, HU40M3	140 x 230.6 x 141.2	140 x 184 x 141.2

(1) These values are given for a nominal switching frequency of 4 kHz, for use in continuous operation.
If operation above 4 kHz needs to be continuous, the nominal drive current should be derated by 10% for 8 kHz, 20% for 12 kHz and 30% for 16 kHz.
The switching frequency can be set between 2 and 16 kHz for all ratings.
Above 4 kHz, the drive will reduce the switching frequency automatically in the event of an excessive temperature rise.
See the derating curves in the User Manual, available on our website at "www.schneider-electric.com".
(2) Typical value for the indicated motor power and for the maximum prospective line Isc.
(3) Weight of product without packaging.
(4) Min. (U1) and max. (U2) nominal supply voltage: 100 (U1)…120 V (U2), 200 (U1)…240 V (U2).
(5) Due to the poor heat dissipation, the ATV12H018●● drive is only supplied as a base plate version.
(6) This drive is delivered with a disconnectable category C1 EMC filter. This drive complies with the IEC/EN 61800-3 standard, Environment 1 (public network), category C1, at 2, 4, 8, 12 and 16 kHz for a shielded motor cable length inferior or equal to 5 m.
(7) Complies with the IEC/EN 61800-3 standard, Environment 1 (public network), category C2, from 2 to 12 kHz for a shielded motor cable length inferior or equal to 5 m; and at 2, 4, 8, 12 and 16 kHz for a shielded motor cable length inferior or equal to10 m.
(8) Complies with the IEC/EN 61800-3 standard, Environment 1 (public network), category C2, from 4 to 16 kHz for a shielded motor cable length inferior or equal to 5 m; and at 2, 4 and 16 kHz for a shielded motor cable length inferior or equal to10 m.
*(9) Available in lots of 7: add **TQ** at the end of the reference. ATV12HU22M2 becomes **ATV12HU22M2TQ.***
*(10) Available in lots of 14: add **TQ** at the end of the reference. For example, ATV12H018M2 becomes **ATV12H018M2TQ.***

Presentation: page 12
Accessories: page 18
Configuration: page 19
Options: page 20
Motor starters: page 22

Variable speed drives

Altivar 12

Drives on a base plate

ATV12PU22M3

Motor		Line supply				Altivar 12				
Power indicated on rating plate (1)		Max. line current (2)		Apparent power	Max. prospective line Isc	Maximum continuous output current (In) (1)	Maximum transient current for 60 s	Dissipated power at maximum output current (In) (1)	Reference	Weight (3)
		at U1	at U2	at U2		at U2				
kW	HP	A	A	kVA	kA	A	A	W		kg
Single-phase supply voltage: 100…120 V 50/60 Hz (4)										
0.18	0.25	6	5	0.6	1	1.4	2.1	18	**ATV12H018F1** (5)	0.700
–	–	11.4	9.3	1.1	1	2.4	3.6	29	**ATV12P037F1** (6)	0.700
Single-phase supply voltage: 200…240 V 50/60 Hz (4) (7)										
0.18	0.25	3.4	2.8	0.7	1	1.4	2.1	18	**ATV12H018M2** (5) (8)	0.700
–	–	5.9	4.9	1.2	1	2.4	3.6	27	**ATV12P037M2** (6)	0.700
–	–	8	6.7	1.6	1	3.5	5.3	34	**ATV12P055M2** (6)	0.700
–	–	10.2	8.5	2	1	4.2	6.3	44	**ATV12P075M2** (6)	0.700
Three-phase supply voltage: 200…240 V 50/60 Hz (4)										
0.18	0.25	2	1.7	0.7	5	1.4	2.1	16	**ATV12H018M3** (5)	0.700
–	–	3.6	3	1.2	5	2.4	3.6	24	**ATV12P037M3** (6)	0.700
–	–	6.3	5.3	2.2	5	4.2	6.3	41	**ATV12P075M3** (6)	0.700
–	–	11.1	9.3	3.9	5	7.5	11.2	73	**ATV12PU15M3** (6)	1.000
–	–	14.9	12.5	5	5	10	15	85	**ATV12PU22M3** (6)	1.000
–	–	19	15.9	6.6	5	12.2	18.3	94	**ATV12PU30M3** (6)	1.600
–	–	23.8	19.9	8.3	5	16.7	25	128	**ATV12PU40M3** (6)	1.600

Dimensions (overall)

Drives on a base plate	W x H x D	
	EMC plate fixed	EMC plate not fixed
	mm	mm
ATV12P037F1, ATV12P037M2...P075M2 ATV12P037M3...P075M3	72 x 189.5 x 102.2	72 x 143 x 102.2
ATV12PU15M3, PU22M3	105 x 189.3 x 98.2	105 x 143 x 98.2
ATV12PU30M3, PU40M3	140 x 230.6 x 100.2	140 x 184 x 100.2

(1) These values are given for a nominal switching frequency of 4 kHz, for use in continuous operation.
If operation above 4 kHz needs to be continuous, the nominal drive current should be derated by 10% for 8 kHz, 20% for 12 kHz and 30% for 16 kHz.
The switching frequency can be set between 2 and 16 kHz for all ratings.
Above 4 kHz, the drive will reduce the switching frequency automatically in the event of an excessive temperature rise.
See the derating curves in the User Manual, available on our website at «www.schneider-electric.com».
(2) Typical value for the indicated motor power and for the maximum prospective line Isc.
(3) Weight of product without packaging.
(4) Min. (U1) and max. (U2) nominal supply voltage: 100 (U1)…120 V (U2). 200 (U1)…240 V (U2).
(5) Due to the poor heat dissipation the ATV12H018●● drive is only supplied as a base plate version.
(6) To size the ATV12P●●●●● drive correctly see the specific manual for the Altivar 12 base plate version available on our website at "www.schneider-electric.com".
(7) This drive is delivered with a disconnectable category C1 EMC filter. This drive complies with the IEC/EN 61800-3 standard, Environment 1 (public network), category C1, at 2, 4, 8, 12 and 16 kHz for a shielded motor cable length inferior or equal to 5 m; and category C2, from 2 to 12 kHz for a shielded motor cable length inferior or equal to 5 m and at 2, 4 and 16 kHz for a shielded motor cable length inferior or equal to 10 m.
*(8) Available in lots of 14: add **TQ** at the end of the reference. For example. ATV12H018M2 becomes **ATV12H018M2TQ.***

Variable speed drives

Altivar 12

Accessories

PF080670A

VW3A9804

PF080666A

VW3A9523

PF080667A

VW3A9524

Accessories

Description	For drives	Reference	Weight kg
Fixing plates for fixing on 35 mm wide ⊥⊥ rail	ATV12H018F1, H037F1 ATV12H018M2…H075M2 ATV12H018M3…H075M3	**VW3A9804**	0.290
	ATV12H075F1 ATV12HU15M2, HU22M2 ATV12HU15M3, HU22M3	**VW3A9805**	0.385
EMC conformity kits These provide a connection compliant with EMC standards (for further information, please consult our website www.schneider-electric.com.) The kit consists of: ■ The EMC plate ■ Clamps ■ Fixing accessories	ATV12H018F1, H037F1 ATV12H018M2…H075M2 ATV12H018M3…H075M3 ATV12P037F1 ATV12P037M2…P075M2 ATV12P037M3…P075M3	**VW3A9523**	0.170
	ATV12H075F1 ATV12HU15M2, HU22M2 ATV12HU15M3, HU22M3 ATV12PU15M3, PU22M3	**VW3A9524**	0.190
	ATV12HU30M3, HU40M3 ATV12PU30M3, PU40M3	**VW3A9525**	0.210
+15 V/+24 V voltage converter Connects directly to the control terminals	ATV12●●●●●●	**VW3A9317**	–

Dimensions (overall)

Accessories	W x H x D
Fixing plates for fixing on an AM1 ED 35 mm ⊥⊥ rail	**mm**
VW3A9804	77.5 x 143.6 x 37.9
VW3A9805	105 x 144 x 40

Variable speed drives

Altivar 12

Configuration tools

TCSWAAC13FB

Configuration tools

Description	For drives	Reference	Weight kg
SoMove lite setup software and associated accessories			
SoMove lite setup software For configuring, adjusting and debugging the Altivar 12 drive. Downloadable from our website "www.schneider-electric.com" or available on the "Description of the Motion & Drives Offer" DVD ROM VW3A8200.	ATV12●●●●●●	*(1)*	–
USB/RJ45 cable equipped with a USB connector and an RJ45 connector. For connecting a PC to the Altivar 12 drive. Length: 2.5 m	ATV12●●●●●●	**TCSMCNAM3M002P**	–
Modbus/Uni-Telway-Bluetooth® adaptor For establishing a Bluetooth® wireless connection between the Altivar 12 drive and a PC equipped with a Bluetooth® wireless link. Pack contents: ■ 1 Bluetooth® adaptor (range 20 m, class 2) with an RJ45 connector ■ For SoMove : 1 x 0.1 m cordset with 2 RJ 45 connectors *(2)* ■ For TwidoSuite : 1 x 0.1 m cordset with 1 RJ 45 connector and 1 connector of mini DIN type	ATV12●●●●●●	**TCSWAAC13FB**	0.032
USB - Bluetooth® adaptor for PC Required for a PC which is not equipped with Bluetooth® technology. Connects to a USB port on the PC. Range of 10 m (class 2).	–	**VW3A8115**	0.200
Simple Loader, Multi-Loader configuration tools and associated cable			
Simple Loader tool For duplicating one drive configuration on another drive. The drives must be powered-up. The tool is supplied with a cordset equipped with 2 RJ45 connectors.	ATV12●●●●●●	**VW3A8120**	–
Multi-Loader tool 1 For copying a configuration on a PC or drive and duplicating it on another drive. The drives do not need to be powered-up. Supplied with the tool: ■ 1 cordset equipped with 2 RJ45 connectors ■ 1 cordset equipped with a USB type A connector and a USB Mini-B type connector ■ 1 x 2 GB SD memory card ■ 1 female/female RJ45 adaptor ■ 4 AA/LR6 1.5 V batteries	ATV12●●●●●●	**VW3A8121**	–
Cordset for Multi-Loader tool 2 For connecting the Multi-Loader tool to the Altivar 12 drive in its packaging. Equipped with a non-locking RJ45 connector with special mechanical catch on the drive end and an RJ45 connector on the Multi-Loader end.	ATV12●●●●●● in its packaging	**VW3A8126**	–
SoMove Mobile software for mobile phone			
SoMove Mobile software allows you to edit drive parameters from a mobile phone using a Bluetooth® wireless connection. Requires the Modbus - Bluetooth® adaptor VW3A8114 (see page 17). It can also be used to back up configurations, which can be imported or exported from a PC. SoMove Mobile software can be downloaded from our website "www.schneider-electric.com".	ATV12●●●●●●	*(1) (3)*	–

(1) Available on our website www.schneider-electric.com.
(2) Also includes other components for connecting compatible Schneider Electric devices.
(3) The SoMove Mobile software requires a basic mobile phone; please consult our website "www.schneider-electric.com".

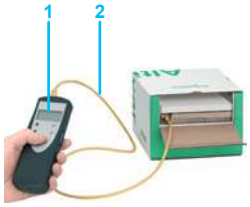

Configuring the drive in its packaging with the Multi-Loader tool VW3A8121+ cordset VW3A8126

Variable speed drives

Altivar 12

Remote display terminals, additional EMC input filters

PF080859B

VW3A1006 with cover open: RUN, FWD/REV and STOP buttons accessible

Remote display terminals and associated cordsets

Remote display terminals For fixing the Human-Machine interface on an enclosure door with IP 54 or IP 65 degree of protection. A remote-fixing cordset VW3A1104R●● is also required.	IP 54 degree of protection	ATV12●●●●●●	**VW3A1006**	0.250
	IP 65 degree of protection	ATV12●●●●●●	**VW3A1007**	0.275
Remote-fixing cordsets equipped with 2 RJ45 connectors. For connecting the VW3A1006 or VW3A1007 remote display terminal to the Altivar 12 drive.	Length: 1 m	ATV12●●●●●●	**VW3A1104R10**	0.050
	Length: 3 m	ATV12●●●●●●	**VW3A1104R30**	0.150

Dimensions (overall)

Remote display terminal	**W x H x D**
	mm
VW3A1006	50 x 70 x 22.7

Additional EMC input filters

For compliance with the requirements of standard IEC/EN 61800-3, category C1, C2 or C3, in Environment 1 (public network) or Environment 2 (industrial network), depending on the drive rating.

PF080669A

VW3A4416

For drives	**Additional EMC input filter**				
Reference	**Shielded cable maximum length** *(1)*			**Reference**	**Weight**
	IEC 61800-3 *(2)*				
	Category C1 from 4 to 12 kHz	**Category C2** from 4 to 12 kHz	**Category C3** from 4 to 12 kHz		
	m	**m**	**m**		**kg**
ATV12H018F1…H037F1 ATV12P037F1	5	20	20	**VW3A4416**	1.120
ATV12H018M2…H075M2 ATV12P037M2…P075M2	20	50	50		
ATV12H075F1	5	20	20	**VW3A4417**	1.455
ATV12HU15M2, HU22M2 ATV12PU15M3, PU22M3	20	50	50		
ATV12H018M3…H075M3 ATV12P037M3… P075M3	–	20	20	**VW3A4418**	1.210
ATV12HU15M3, HU22M3 ATV12PU15M3, PU22M3	5	20	20	**VW3A4419**	1.440

PF080672A

ATV12H075M2 with EMC kit VW3A9523 fixed on EMC filter VW3A4416

Dimensions (overall)

Additional EMC input filters	**W x H x D**
	mm
VW3A4416	75 x 194 x 30
VW3A4417	117 x 184 x 40
VW3A4418	75 x 194 x 40
VW3A4419	117 x 190 x 40

(1) The filter choice table gives the maximum lengths of the shielded cables between the motors and the drives. These maximum lengths are given for indication because they depend on the motor properties and on the used cables. In the case of parallel motors, the total addition of the lengths must be taken into account.
(2) IEC 61800-3 standard : EMC immunity and EMC conducted and radiated emissions :
- categories C1 et C2 : public network
- category C3 : industrial network
For further information, see the "Conducted EMC emissions" and "Radiated EMC emissions" characteristics on our website www.schneider-electric.com.

Variable speed drives

Altivar 12

Motor chokes, ferrite suppressors, Modbus serial links, and replacement parts

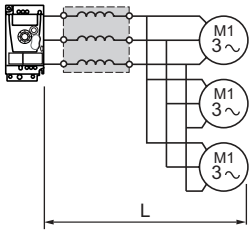

ATV12VW3A455●

Motor choke

Motor chokes

Description	Nominal current A	For drives	Reference	Weight kg
Motor chokes Required: ■ When connecting more than 2 motors in parallel ■ When the motor cable length (L), including tap-offs, is: □ 50…100 m for a shielded motor cable *(1)*, □ 100…200 m for an unshielded motor cable *(1)*.	4	ATV12H018F1, H037F1 ATV12H018M2…H055M2 ATV12H018M3, H037M3 ATV12P037F1 ATV12P037M2, P055M2 ATV12P037M3	**VW3A4551**	1.880
	10	ATV12H075F1 ATV12H075M2, HU15M2 ATV12H075M3, HU15M3 ATV12P075M2 ATV12P075M3, PU15M3	**VW3A4552**	3.700
	16	ATV12HU22M2 ATV12HU22M3, HU30M3 ATV12PU22M3, PU30M3	**VW3A4553**	4.100
	30	ATV12HU40M3 ATV12PU40M3	**VW3A4554**	6.150

Dimensions (overall)

Motor chokes	W x H x D mm
VW3A4551	100 x 135 x 60
VW3A4552, A4553	130 x 155 x 90
VW3A4554	155 x 170 x 135

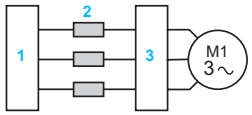

Ferrite suppressors

Ferrite suppressors for downstream contactor opening

Description	For drives	Sold in lots of	Unit reference	Weight kg
Ferrite suppressors 2 for downstream contactor opening 3 and for use with ATV12HU●●●M2 or ATV12HU●●M3 drives 1	ATV12H018M2	3	**VW3A31451**	0.300
	ATV12H037M2, ATV12H018M3, H037M3	3	**VW3A31452**	0.200
	ATV12H055M2...HU22M2, ATV12H075M3...HU22M3	3	**VW3A31453**	0.100

Dimensions (overall)

Ferrite suppressors	W x H x D mm
VW3A31451	33 x 33 x 33.5
VW3A31452	22.5 x 21.5 x 33
VW3A31453	19 x 19 x 30

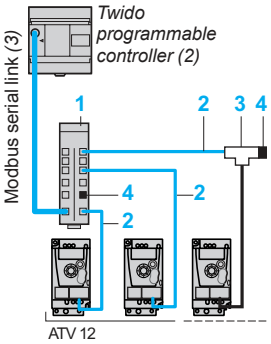

Example of Modbus diagram with connection via splitter box and RJ45 connectors

Modbus serial link

Description	Item no.	Length m	Unit reference	Weight kg
Connection via splitter box and RJ45 connectors				
Modbus splitter box 10 RJ45 connectors and 1 screw terminal	1	–	**LU9GC3**	0.500
Cordsets for Modbus serial link equipped with 2 RJ45 connectors	2	0.3	**VW3A8306R03**	0.025
		1	**VW3A8306R10**	0.060
		3	**VW3A8306R30**	0.130
Modbus T-junction boxes (with integrated cable)	3	0.3	**VW3A8306TF03**	0.190
		1	**VW3A8306TF10**	0.210
Line terminators *(4) (5)* For RJ45 connector	4 R = 120 Ω C = 1 nf	–	**VW3A8306RC**	0.010
	4 R = 150 Ω	–	**VW3A8306R**	0.010

PF080647A

VZ3V1302

Replacement parts

Description	For drives	Reference	Weight kg
Fans	ATV12H075F1, ATV12HU15M2, ATV12HU22M2	**VZ3V1301**	0.160
	ATV12HU15M3…HU40M3	**VZ3V1302**	0.150

(1) Motor cable length given for a switching frequency of 4 kHz.
(2) Please refer to the Twido programmable controller catalogue.
(3) Cable depends on the type of controller or PLC.
(4) Order in multiples of 2.
(5) Depends on the bus architecture.

Variable speed drives

Altivar 12

Motor starters: Single-phase supply voltages 100…120 V and 200…240 V

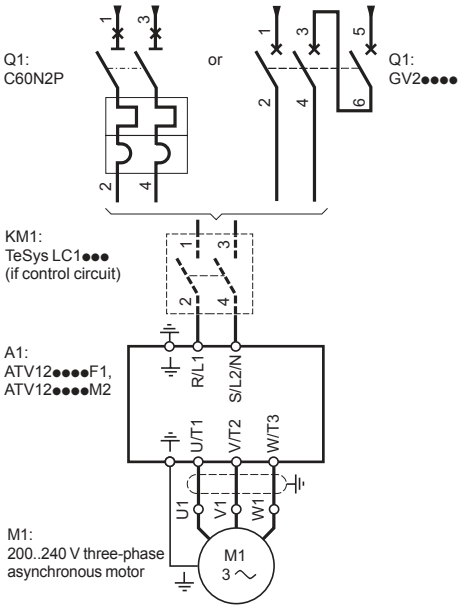

Motor starter with single-phase power supply

Applications

The proposed combinations can:

- Protect people and equipment (when a short-circuit occurs)
- Maintain protection upstream of the drive in the event of a short-circuit on the power stage

Two types of combination are possible:

- Drive + circuit-breaker: Minimum combination
- Drive + circuit-breaker + contactor: Minimum combination with contactor when a control circuit is needed

Motor starters

Standard power ratings of three-phase 4-pole 50/60 Hz motors (2)		Variable speed drive	Combination with control circuit (circuit-breaker + contactor)			
			Minimum combination (circuit-breaker only)			TeSys contactor (1)
			TeSys motor circuit-breaker (3) / *Modular circuit-breaker (4)*	Operating range or rating	Maximum short-circuit current Icu	
kW	*HP*			A	kA	
M1		A1	Q1			KM1
Single-phase supply voltage: 100…120 V 50/60 Hz *(5)*						
0.18	*0.25*	**ATV12H018F1**	**GV2ME14**	6…10	> 100	**LC1K09**
			GV2L10	6.3	> 100	
			2-pole C60N	10	10	
0.37	*0.5*	**ATV12●037F1**	**GV2ME16**	9…14	> 100	**LC1K12**
			GV2L16	14	> 100	
			2-pole C60N	16	10	
0.75	*1*	**ATV12H075F1**	**GV2ME21**	17…23	50	**LC1D25**
			GV2L22	25	> 50	
			2-pole C60N	20	10	
Single-phase supply voltage: 200…240 V 50/60 Hz *(5)*						
0.18	*0.25*	**ATV12H018M2**	**GV2ME08**	2.5…4	> 100	**LC1K09**
			GV2L08	4	> 100	
			2-pole C60N	6	10	
0.37	*0.55*	**ATV12●037M2**	**GV2ME14**	6…10	> 100	**LC1K09**
			GV2L10	6.3	> 100	
			2-pole C60N	10	10	
0.55	*0.75*	**ATV12●055M2**	**GV2ME14**	6...10	> 100	**LC1K09**
			GV2L14	10	> 100	
			2-pole C60N	10	10	
0.75	*1*	**ATV12●075M2**	**GV2ME16**	9...14	> 100	**LC1K12**
			GVL16	14	> 100	
			2-pole C60N	16	10	
1.5	*2*	**ATV12HU15M2**	**GV2ME21**	17…23	50	**LC1D18**
			GV2L20	18	> 100	
			2-pole C60N	20	10	
2.2	*3*	**ATV12HU22M2**	**GV2ME32**	24...32	50	**LC1D25**
			GV2L22	25	50	
			2-pole C60N	32	10	

(1) For a complete list of references for TeSys contactors, please refer to the "Motor starter solutions - Control and protection components" and "Motor starters up to 150 A" catalogues or visit "www.schneider-electric.com".
(2) Motor power indicated for combination with an ATV12H●●●●● drive with the same rating. For combination with an ATV12P●●●●● drive, refer to the specific manual for the Altivar 12 base plate version, available on our website at "www.schneider-electric.com".
(3) TeSys motor circuit-breakers:
- GV2 ME●●: Thermal magnetic motor circuit-breakers with pushbutton control
- GV2 L●●: Magnetic motor circuit-breakers with control by rotary knob
(4) 2-pole C60N modular circuit-breaker
(5) Can be integrated in devices connected to a power socket:
- If the line current is ≤ 16 A, connection to a single-phase power socket, 10/16 A 250 V ∼
- If the line current is > 16 A, connection to a single-phase power socket conforming to standard IEC 60309

Variable speed drives

Altivar 12

Motor starters: Three-phase supply voltage 200…240 V

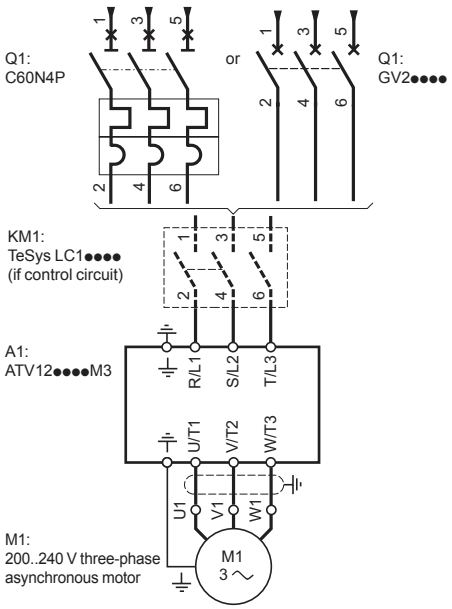

Motor starter with three-phase power supply

Motor starters (continued)

Standard power ratings of three-phase 4-pole 50/60 Hz Hz motors (2)		Variable speed drive	Combination with control circuit (circuit-breaker + contactor)			
			Minimum configuration (circuit-breaker only)			TeSys contactor (1)
			TeSys motor circuit-breaker (3)	Operating range or rating	Maximum short-circuit current Icu	
			Modular circuit-breaker (4)			
kW	*HP*			A	kA	
M1		A1	Q1			KM1
Three-phase supply voltage: 200…240 V 50/60 Hz						
0.18	*0.25*	ATV12H018M3	GV2ME07	1.6…2.5	> 100	LC1K09
			GV2L07	2.5	> 100	
			4-pole C60N	6	10	
0.37	*0.55*	ATV12●037M3	GV2ME08	2.5…4	> 100	LC1K09
			GV2L08	4	> 100	
			4-pole C60N	6	10	
0.75	*1*	ATV12●075M3	GV2ME14	6...10	> 100	LC1K09
			GV2L14	10	> 100	
			4-pole C60N	10	10	
1.5	*2*	ATV12●U15M3	GV2ME16	9...14	> 100	LC1K12
			GVL16	14	> 100	
			4-pole C60N	16	10	
2.2	*3*	ATV12●U22M3	GV2ME20	13…18	> 100	LC1D18
			GV2L20	18	> 100	
			4-pole C60N	20	10	
3	–	ATV12●U30M3	GV2ME21	17...23	50	LC1D25
			GV2L22	25	50	
			4-pole C60N	20	10	
4	*5*	ATV12●U40M3	GV2ME32	24...32	50	LC1D25
			GV2L22	25	50	
			4-pole C60N	32	10	

Combinations of C60N circuit-breakers/Vigi C60 add-on modules

C60N 2-pole/4-pole	*Vigi C60*		
Rating (A)	Rating (A)	Type *(5)*	Sensitivity
6	25	A "si"	30 mA
10	25	A "si"	30 mA
16	25	A "si"	30 mA
20	25	A "si"	30 mA
32	40	A "si"	30 mA

Recommendations for special uses:

■ All RH10/RH21/RH99/RHU residual current protection devices with separate sensors are compatible as long as the type and sensitivity of the add-on modules given in the table above are observed.

■ It is advisable to connect one RCD (residual current device) per drive. In this case, a type B RCD must not be located downstream of a type A or AC RCD.

(1) For a complete list of references for TeSys contactors, please refer to the "Motor starter solutions - Control and protection components" and "Motor starters up to 150 A" catalogues or visit "www.schneider-electric.com".
(2) Motor power indicated for combination with an ATV12H●●●●● drive with the same rating. For combination with an ATV12P●●●●● drive, refer to the specific manual for the Altivar 12 base plate version, available on our website at "www.schneider-electric.com".
(3) TeSys motor circuit-breakers:
- GV2ME●●: Thermal magnetic motor circuit-breakers with pushbutton control
- GV2L●●: Magnetic motor circuit-breakers with control by rotary knob
(4) 4-pole C60N modular circuit-breaker
(5) For additional protection against direct contact, with a three-phase power supply and access to the DC bus terminals (PA/+ and PC /-), the add-on module must be type B with a sensitivity of 30 mA.

Product reference index

A

ATV12H018F1 16 17
ATV12H018M2 16 17
ATV12H018M3 16 17
ATV12H037F1 16
ATV12H037M2 16
ATV12H037M3 16
ATV12H055M2 16
ATV12H075F1 16
ATV12H075M2 16
ATV12H075M3 16
ATV12HU15M2 16
ATV12HU15M3 16
ATV12HU22M2 16
ATV12HU22M3 16
ATV12HU30M3 16
ATV12HU40M3 16
ATV12P037F1 17
ATV12P037M2 17
ATV12P037M3 17
ATV12P055M2 17
ATV12P075M2 17
ATV12P075M3 17
ATV12PU15M3 17
ATV12PU22M3 17
ATV12PU30M3 17
ATV12PU40M3 17

L

LU9GC3 21

T

TCSMCNAM3M002P 19
TCSWAAC13FB 19

V

VW3A1006 20
VW3A1007 20
VW3A1104R10 20
VW3A1104R30 20
VW3A4416 20
VW3A4417 20
VW3A4418 20
VW3A4419 20
VW3A4551 21
VW3A4552 21
VW3A4553 21
VW3A4554 21
VW3A8115 19
VW3A8120 19
VW3A8121 19
VW3A8126 19
VW3A8306R 21
VW3A8306R03 21
VW3A8306R10 21
VW3A8306R30 21
VW3A8306RC 21
VW3A8306TF03 21
VW3A8306TF10 21
VW3A9317 18
VW3A9523 18
VW3A9524 18
VW3A9525 18
VW3A9804 18
VW3A9805 18
VW3A31451 21
VW3A31452 21
VW3A31453 21
VZ3V1301 21
VZ3V1302 21

Altivar drives

www.schneider-electric.com/drives

Schneider Electric Industries SAS

Head Office
35, rue Joseph Monier
F-92500 Rueil-Malmaison
France

The information provided in this documentation contains general descriptions and/or technical characteristics of the performance of the products contained herein. This documentation is not intended as a substitute for and is not to be used for determining suitability or reliability of these products for specific user applications. It is the duty of any such user or integrator to perform the appropriate and complete risk analysis, evaluation and testing of the products with respect to the relevant specific application or use thereof. Neither Schneider Electric nor any of its affiliates or subsidiaries shall be responsible or liable for misuse of the information contained herein.

Design: Schneider Electric
Photos: Schneider Electric

DIA2ED2130101EN

January 2015 - V2.0