Vigi iC60 A9V0●●●●

en

The installation, or part of it, is protected by devices which automatically switch off the supply if earth default develops.
These devices should be tested periodically according to the local regulations, by pressing on the button marked "T".

⚠⚠ DANGER

HAZARD OF ELECTRIC SHOCK, EXPLOSION, OR ARC FLASH
■ Test once a month each device by pressing on the button marked "T".
Failure to follow these instructions will result in death or serious injury.

The devices should switch off the supply immediately, and should then be switched on to restore the supply.
If the devices do not switch off the supply when the button is pressed, seek expert advice.

Schneider Electric

iC60 1P + Vigi iC60 1P+N

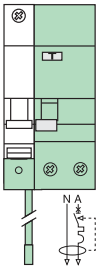

iC60 2P + Vigi iC60 1P+N

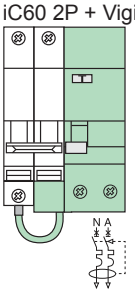

iC60 3P + Vigi iC60 3P+N

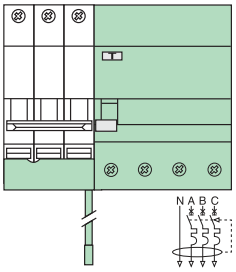

iC60 4P + Vigi iC60 3P+N

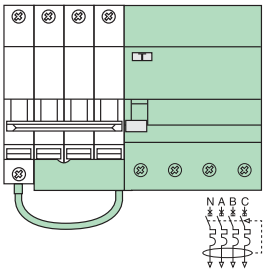

	Vigi iC60 25 A	Vigi iC60 63 A
iC60 ≤ 25 A	■	■
32 A ≤ iC60 ≤ 63 A	NO	■
C60, C120	NO	NO
iC60 LMA ≤ 16 A	■	■
iC60 LMA 25 A	NO	■
iC60 LMA 40 A	NO	■

1

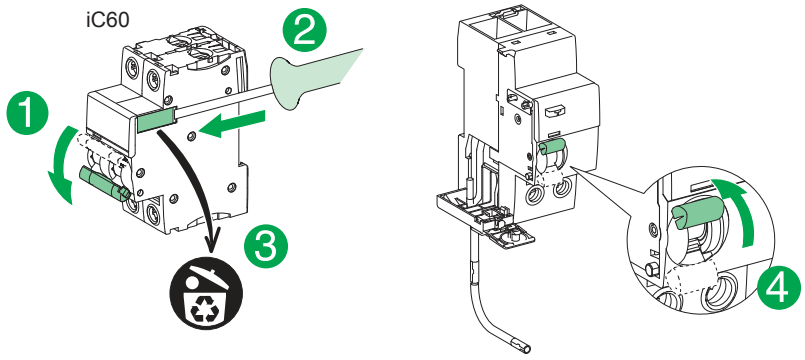

2

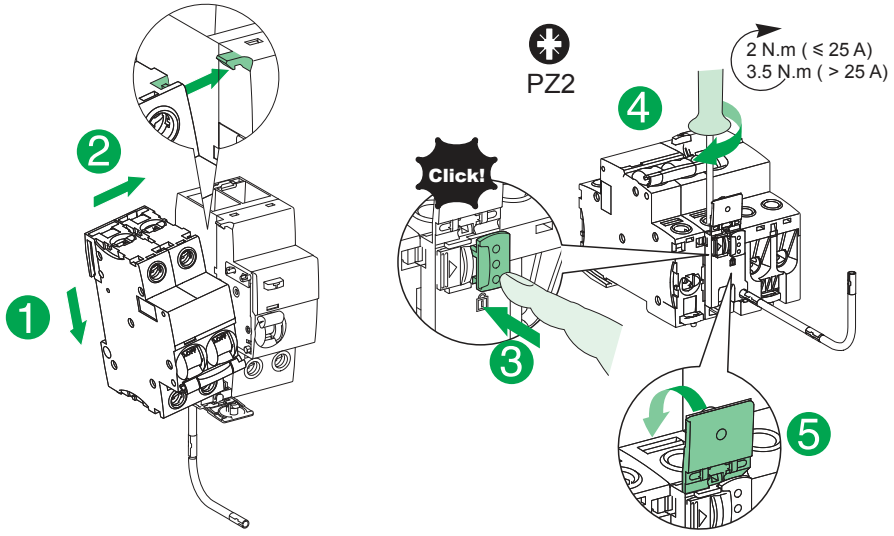

3a

⚠⚠ DANGER

HAZARD OF ELECTRIC SHOCK, EXPLOSION, OR ARC FLASH
Disconnect all power before servicing equipment.
Failure to follow these instructions will result in death or serious injury.

iC60 2P + Vigi iC60 1P+N
iC60 4P + Vigi iC60 3P+N

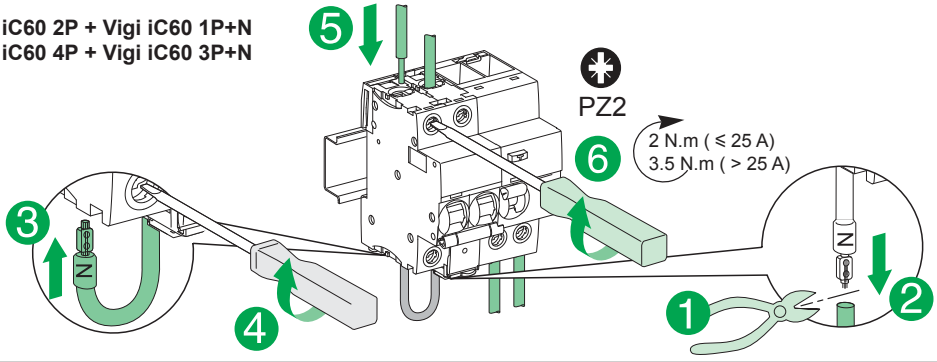

3b

iC60 1P + Vigi iC60 1P+N
iC60 3P + Vigi iC60 3P+N

⚠ DANGER

HAZARD OF ELECTRIC SHOCK, EXPLOSION, OR ARC FLASH
Disconnect all power before servicing equipment.
Failure to follow these instructions will result in death or serious injury.

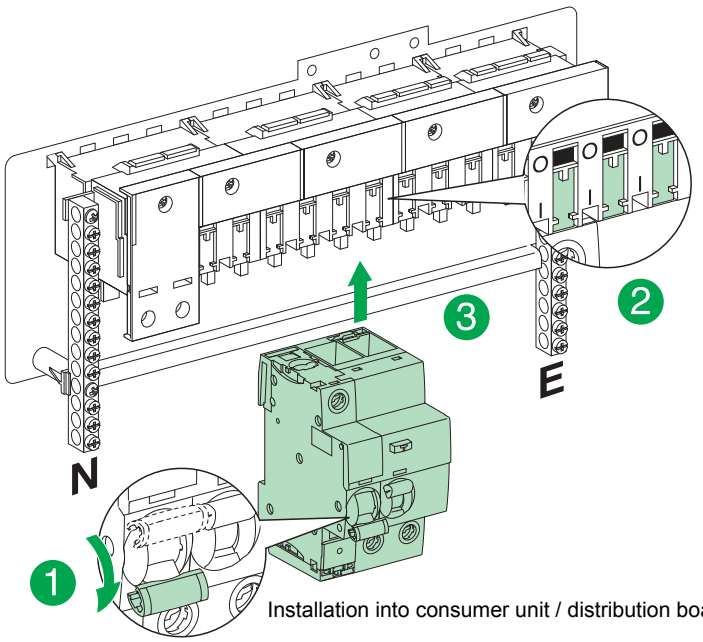

Installation into consumer unit / distribution board

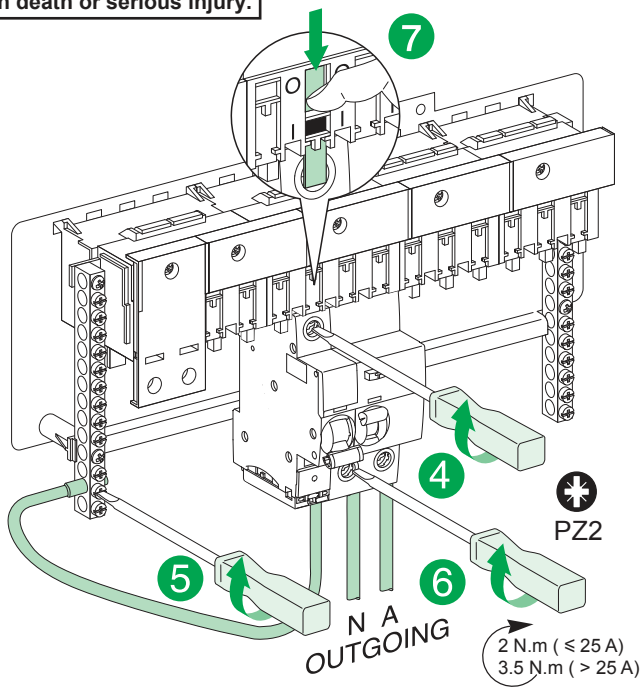

4

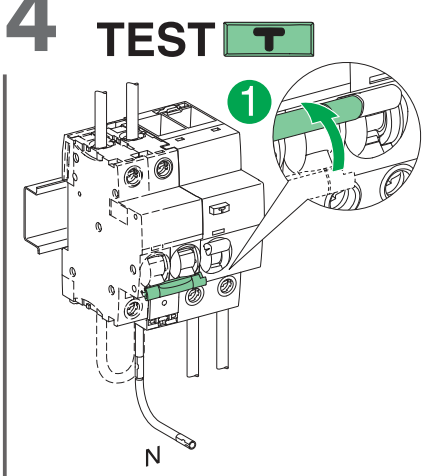

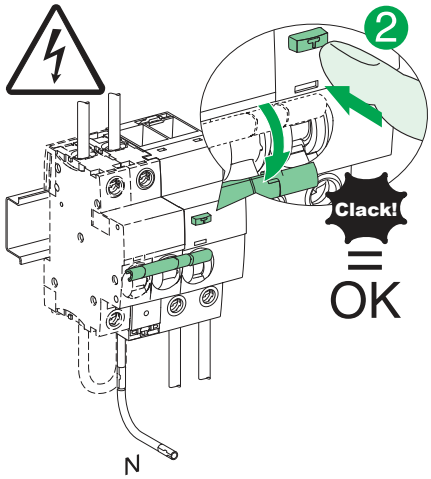

5

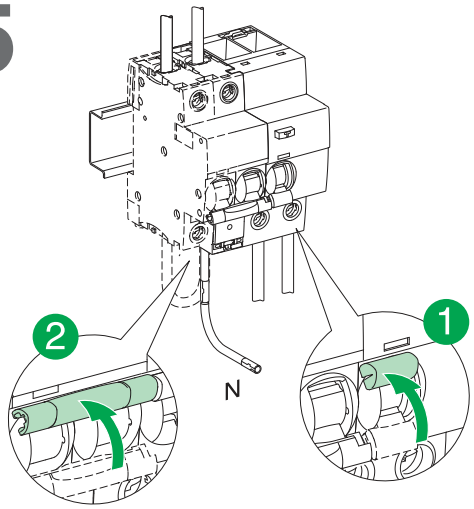

6

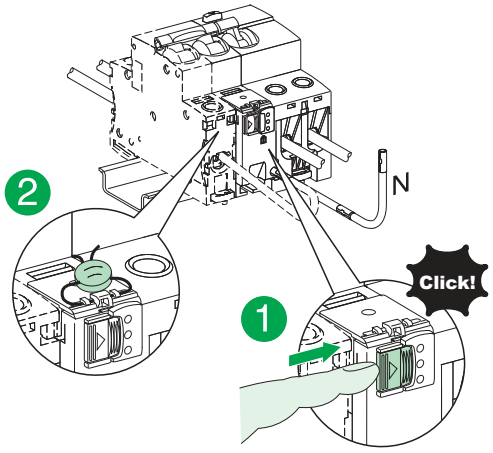

7

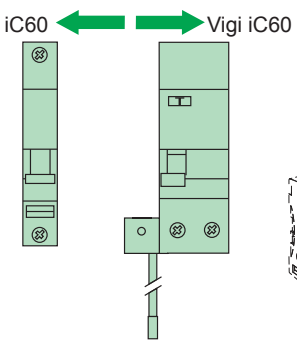

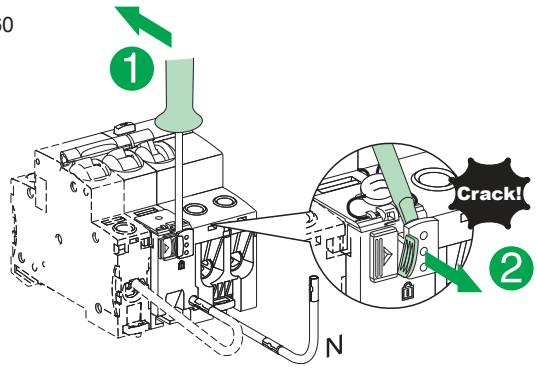

Schneider Electric Industries SAS
35, rue Joseph Monier
CS 30323
F - 92506 Rueil Malmaison Cedex
www.schneider-electric.com

Ce produit doit être installé, raccordé et utilisé en respectant les normes et/ou les règlements d'installation en vigueur.
En raison de l'évolution des normes et du matériel, les caractéristiques et cotes d'encombrement données ne nous engagent qu'après confirmation par nos services.
This product must be installed, connected and used in compliance with prevailing standards and/or installation regulations.
As standards, specifications and designs change from time to time, always ask for confirmation of the information given in this publication.

© 07-2012 Schneider Electric - All rights reserved.