# Clipsal Motion and Occupancy Sensors

The sixth sense in security and energy management.

clipsal.com/sensors

Life Is On

CLIPSAL by Schneider Electric

# Introduction

Motion and occupancy sensors offer benefits in security, energy management, hospitality and true 'hands-free' convenience.

A motion sensor is a lighting control device that detects movement, such as a person walking into a space. Once detection occurs loads are automatically switched on and are then switched off after a preset amount of time. The Clipsal Infrascan® range is the benchmark and preferred choice for motion sensors due to their reliability and simplicity of installation and operation.

Occupancy sensors detect the occupancy of a space, utilising highly accurate detection technology. Occupancy sensors detect fine motions such as the typing of a keyboard, which trigger the load of the sensor.

Clipsal offers a wide range of motion and occupancy sensors for use in residential and commercial applications. This range encompasses standalone sensors and system integrated sensors to provide diverse opportunities to address all residential and commercial energy management needs. Different technologies including Passive Infrared (PIR), Ultrasonic (US) and Microwave provide appropriate solutions for different environments.

# Contents

## Infrascan® Sensors


750 Series – Outdoor 4

751 Series – Corner Mount 5

753 Series – 360° Flush Mount 6

753 SSR – 360° Surface Mount 8


## Commercial Sensors


752IR2RC – Wide Range 9

752HF2RC – Microwave 10

752DALI Series – DALI Output 11

752/CD Series – Dual Tech 12


## C-Bus® Sensors


5750 Series – Outdoor 14

5751 Series – Corner Mount 15

5753 Series – 360° Flush Mount 16

5754 Series – 360° Surface Mount 17


## DALIcontrol Sensors


DCDALMS360 – 360° Flush Mount 18

DCDAL31MOD – 30 Series Mechanism 19

# Infrascan® Sensors

## 750WP Outdoor Sensor, 2 Wire

## 750WPR Outdoor Sensor, 3 Wire

The 750 Series is Clipsal's flagship sensor, well known for its robustness, ease of install and simple functionality. The Infrascan provides the dual benefits of safety and security. Designed for Australia's harsh conditions with a UV protected enclosure and an IP66 rating, the sensor is completely dust and waterproof allowing for installation in outdoor areas. Ideal for garages or carparks.

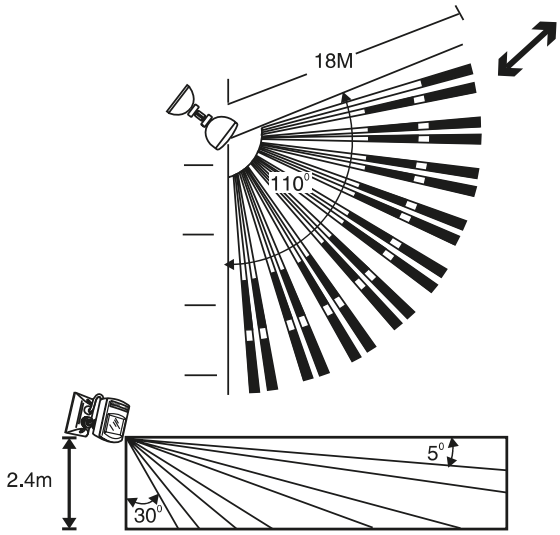


### Features

- 110° field of view, covering up to 18 metres from unit
- PIR sensor technology for precise outdoor motion detection
- Flat, multi segmented lens divides 'field of view' into 48 zones – reduces number of 'dead zones'
- Wall or ceiling mounted – for flexibility in installation positioning
- Prewired 2 and 3 core lead for reduced installation time and variety of cabling termination methods
- 3 wire model has a highly robust internal relay for high load ratings longevity and flexible applications including LED lighting
- Suitable for residential and commercial applications

### Specifications

| | 750WP | 750WPR |
|---|---|---|
| Supply | AC 200 – 265V, 50Hz | |
| Output | 5A | 10A |
| Time Setting | 5 seconds to 20 minutes | |
| IP Rating | IP66 | |
| Wiring | 2 Wire | 3 Wire |

See data sheet on Clipsal.com for full specifications.

# 751 Corner Mount Sensor, 2 Wire

# 751R Corner Mount Sensor, 3 Wire

The 751 Series provides 90° of detection, designed for installation in corners. With precise PIR detection and robust design, the sensor is ideal for applications in bathrooms, walk in robes and home offices.

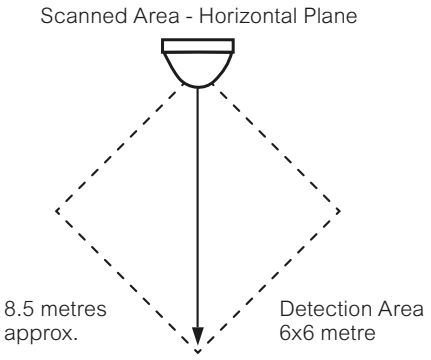


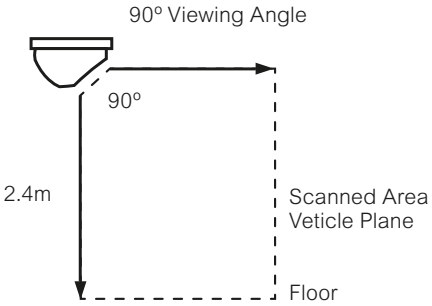


## Features

- 90° viewing angle from sensor head, detection range 6 x 6 metres, at 2.3 metre mounting height
- PIR sensor technology for precise indoor motion detection
- Designed for room corner mounting
- Sensor rotatable by 120° – easy adjusting of sensing zone
- Simple installation for faster fit off
- Two wiring types suitable for a variety of applications – three wire units can be paralleled to control a single load from multiple sensors
- Suitable for residential and commercial applications

## Specifications

| | 751 | 751R |
|---|---|---|
| Supply | AC 200 – 265V, 50Hz | |
| Output | 2A | 10A |
| Time Setting | 5 seconds to 20 minutes | |
| IP Rating | IP20 | |
| Wiring | 2 Wire | 3 Wire |

See data sheet on Clipsal.com for full specifications.

# 753 360° Flush Mount Sensor, 2 Wire

# 753R 360° Flush Mount Sensor, 3 Wire

The 753 Series utilises an advanced quad element sensor array to allow instantaneous detection. Appearance wise, the 753 is a slimline, fully recessed mounting facility, making it one of the most sleek and unobtrusive 360° sensors available. Ideal for applications in bathrooms, walk in robes, pantries and office areas.

## Features

- 360° field of view, with detection range 10 metre diameter, at 2.4 metre mounting height
- PIR sensor technology for precise indoor motion detection
- Unobtrusive flush mount design
- Advanced quad element sensor
- Recessed ceiling mounted
- Robust design and easy to install with large wiring terminals
- 753R has a high 10A load rating for use with a variety of applications including LED lighting
- Suitable for residential and commercial applications

**Top View** at 2.4m Mounting Height

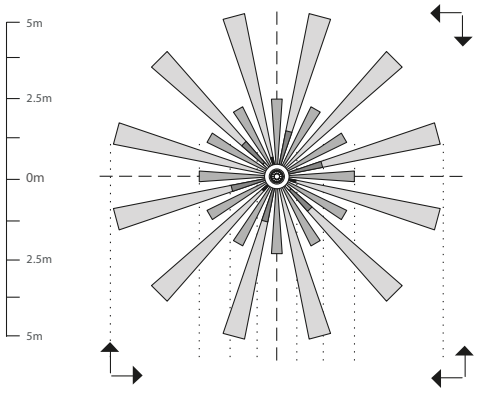


## Specifications

| | 753 | 753R |
|---|---|---|
| Supply | AC 200 – 265V, 50Hz | |
| Output | 2A | 10A |
| Time Setting | 5 seconds to 20 minutes | |
| IP Rating | IP20 | |
| Wiring | 2 Wire | 3 Wire |

See data sheet on Clipsal.com for full specifications.

# 753CF1 360° Flush Mount Sensor, 1 Output

# 753CF2 360° Flush Mount Sensor, 2 Outputs

The 360° PIR Sensor is low profile, allowing for an unobtrusive addition to the room, while maximising convenience and energy saving. With its simple installation and flush mounting, the sensor is ideal to address basic sensor requirements, including toilets, walk in robes, pantries and small offices.

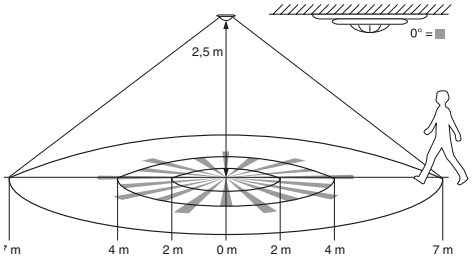


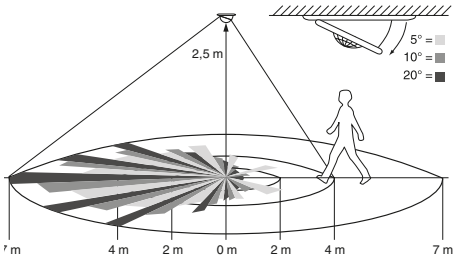


## Features

- 360° field of view, with detection range of 3.5 metre radius, and up to 7 metre if titled with gimble
- Small, attractive flush sensor with unobtrusive design
- Gimbled head for range adjustment and easy access to trimpots
- Two models available - Single load (for lighting) and dual load (for lighting and HVAC)
- Quick and easy settings for lux level and time on both outputs
- Consists of sensor and power box to allow for low ceiling spaces
- Lens mask provided to shield unwanted detection zones
- Suitable for residential and small commercial applications

## Specifications

| | 753CF1 | 753CF2 |
|---|---|---|
| Supply | AC 220-240 V, 50/60 Hz | |
| Output Ratings | LED: max. 100 W<br>Incandescent lamps: max. 1000 W | **Output 1:** (Switched Active)<br>LED lamps: 100 W<br>Incandescent lamps 240V a.c.: 2000 W<br><br>**Output 2:** (Voltage Free Relay)<br>AC 250 V, 5 A resistive<br>Motor: 100 W |
| Time Setting | 30s to 30 min | **Time 1 (Output 1):** 30s to 30 min<br><br>**Time 2 (Output 2):** 10s to 15 min |
| IP Rating | IP20 | |

See data sheet on Clipsal.com for full specifications.

# 753SSR 360° Surface Mount Sensor

The 753SSR provides high resolution PIR detection over a wide area of 24 metres diameter. Equipped with four pyro sensors, the sensor is capable of detecting fine movements, such as a finger moving, within its inner diameter as well as larger movements in its outer detection area. Ideal for indoor or areas such as open area living, offices, car parks, garages, carports or outside spaces.

## Features

- 360° field of view, with detection range 24 metre diameter
- Advanced resolution with four PIR pyro sensors for detection of small movements
- Ceiling surface mounted with inbuilt wiring box
- Inbuilt 4 hour manual override ON feature
- 1416 switching zones and 10 detection levels for precise detection
- Lens mask provided to shield unwanted detection zones

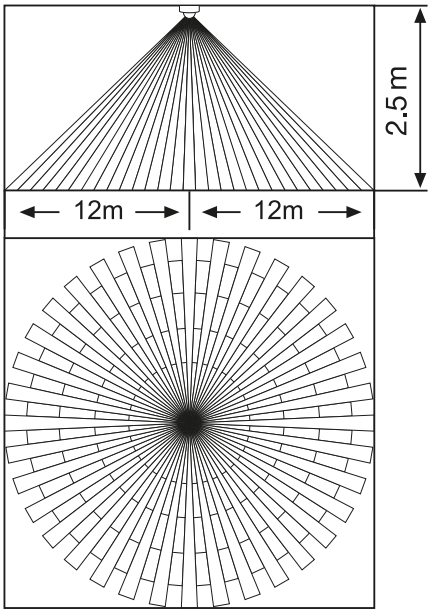


## Specifications

| | 753SSR |
|---|---|
| Supply | 240V 50Hz |
| Output | ELV: 1000W Max<br>Fluoro: 1000W Max<br>LED: 8x LED drivers Max<br>Incandescent / 240V halogen: 2400W Max |
| Time Setting | 5 seconds – 15 minutes<br>Pulse Mode (approx. 2 seconds) |
| IP Rating | IP54 |

See data sheet on Clipsal.com for full specifications.

# Commercial Sensors

## 752IR2RC Wide Range Sensor

The 752IR2RC is a wide range ceiling mounted sensor with dual output for lighting and HVAC control. The sensor detects movement over 30 metres, providing high sensitivity within the minor and major motion zones. Ideal for use in large open areas, lobbies, corridors, offices, libraries, conference rooms and reception areas.

Side View

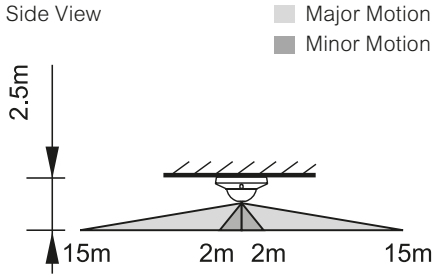


Top View

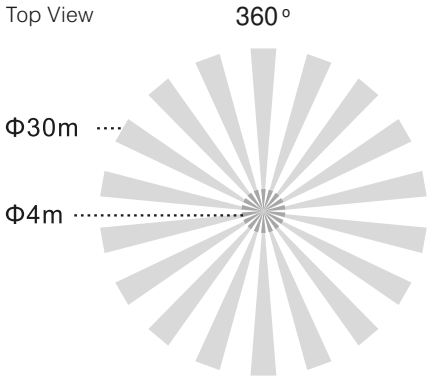


### Features

- 360° field of view, with detection range 30 metre diameter
- PIR sensor technology for precise indoor detection
- Switching of two outputs (e.g. light and HVAC) with two independent adjustable timers
- External triggering via pushbutton
- Configurable timer options including pulse output to trigger external relays
- Optional wireless remote control (752RC/IR) for ease of configuration
- Suitable for flush or surface mounting with both bases included

### Specifications

| | 752IR2RC |
|---|---|
| Supply | AC 220–240 V, 50/60 Hz |
| Output | **Output 1: (Switched Active):**<br>LED lamps: 100 W<br>Incandescent lamps: 2000 W<br><br>**Output 2: (Voltage Free Relay):**<br>AC 250 V, 5 A resistive<br>Motor: 100 W |
| Time Setting | **Time 1 (output 1):** from approx. 10 s to approx. 30 min<br>**Time 2 (output 2):** from approx. 10 s to approx. 60 min |
| IP Rating | IP40 (flush mount) or IP42 (surface mount) |

See data sheet on Clipsal.com for full specifications.

# 752HF2RC Microwave Sensor

The 752HF2RC is an occupancy detector with an integrated High Frequency Doppler Effect Sensor providing high sensitivity to small motion, suitable for many commercial applications. It allows excellent detection ability for heights reaching 10 metres and through non-metallic materials. Ideal for high ceilings, foyers, above ceiling spaces, factory high bay applications and areas where detection without direct view to movement is needed and where temperature influences might cause false detection with PIR sensors, such as data centres.

## Features

- High frequency technology for advanced occupancy detection
- Strong detection at significant heights – 10 metre diameter at height of 10 metres
- High performance sensing – dust, temperature, light, airflow, sound or vibration will not affect performance
- Sensor penetrates non–metallic materials (e.g. wood, glass, thin brick) – can detect motion in areas where direct view is unavailable
- Detection range 14 metre diameter, at an installation height of 2.5 metres
- Optional wireless remote control (752RC/HF) for ease of configuration
- 360° field of view
- Integrated light level sensor - set desired thresholds for switching on the light
- Suitable for flush or surface mounting with both bases included

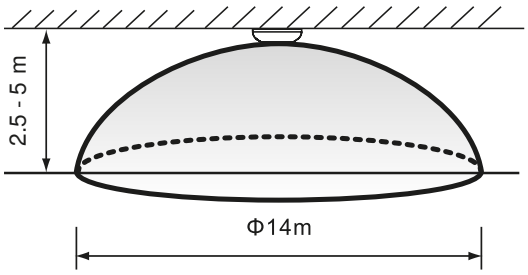


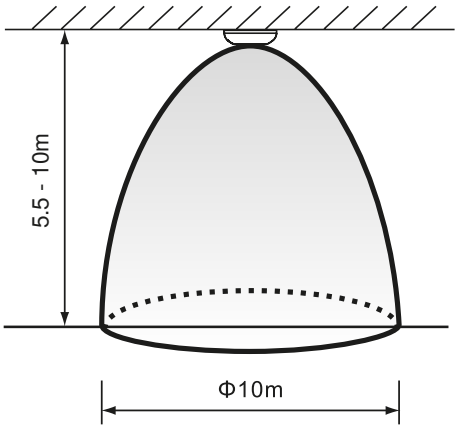


## Specifications

| | 752HF2RC |
|---|---|
| Supply | AC 220–240 V, 50/60 Hz |
| Output | **Output 1: (Switched Active):**<br>LED lamps: 100 W<br>Incandescent lamps: 2000 W<br><br>**Output 2: (Voltage Free Relay):**<br>AC 250 V, 5 A resistive<br>Motor: 100 W |
| Time Setting | **Time 1 (output 1):** 10s to 30 min<br>**Time 2 (output 2):** 10s to 60 min |
| IP Rating | IP40 (flush mount) or IP42 (surface mount) |

See data sheet on Clipsal.com for full specifications.

# 752DALIRC DALI Output Master Sensor

# 752DALIS DALI Output Slave Sensor

The 240V powered stand-alone DALI Output Sensors provide occupancy detection with multi-functional capabilities including switching on and off and dimming of end point DALI fittings, offering comfort and convenience as well as energy saving benefits. The DALI Slave PIR Sensor provides detection range extension for the Master Sensor. Ideal for lobbies, class rooms, offices and conference rooms.

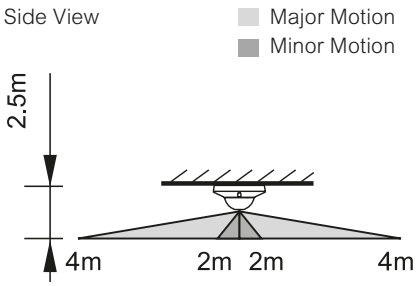


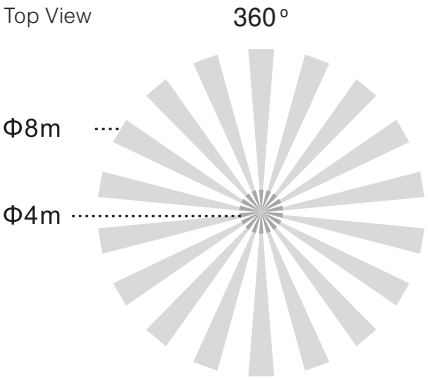


## Features

- PIR sensor technology for precise motion and occupancy detection
- 360° field of view, with detection range of 8 metre diameter
- Switching and dimming of DALI electronic ballasts
- Daylight harvesting for constant brightness management
- 2 independent DALI broadcast outputs on the Master Sensor
- Detection range extended by up to 10 Slave Sensors
- Input for external switches for manual override
- Optional wireless remote control (752RC/DALI) for easy configuration
- Suitable for flush or surface mounting with both bases included

## Specifications

| | 752DALIRC | 752DALIS |
|---|---|---|
| Supply | AC 220–240V, 50/60Hz | |
| Output | **DA1 and DA2 (per zone):**<br>Max. 25 DALI ballasts<br>16V d.c. , 50mA max | **Managed by Master** |
| Time Setting | 1 min to 60 min | **Managed by Master** |
| Standby Mode | Options:<br>Output level:10%, 20%,<br>30% or OFF<br>Time settings: 5 ,10, 15 min or infinity. | **N/A** |
| IP Rating | IP40 (Flush mount) or IP42 (surface mount) | |

See data sheet on Clipsal.com for full specifications.

# 752CD1RC Dual Tech Sensor, 1 Output

# 752CD2RC Dual Tech Sensor, 2 Output

The Dual Tech Occupancy Sensors utilise PIR and Ultrasonic technologies to provide highly sensitive yet accurate detection. The sensors detect minor and major movement, while also screening out nuisance or false triggering. Providing logic functions to enable optimal detection performance through the entire coverage area, dual technology sensors are best equipped to deal with commercial applications such as open office areas, conference rooms or class rooms.

## Features

- Highly effective detection combining Ultrasonic technology (for high sensitivity of motion) with PIR (to combat false triggering)
- 360° field of view, with two detection zones
- Detects minor movements such as typing or reading
- 4 detection options: PIR + US, PIR only, US only, PIR or US
- Optional wireless remote control (752RC/CD) for easy configuration
- Single channel model for control of lighting and dual channel model for simultaneous control of lighting and HVAC
- Suitable for flush or surface mounting with both bases included

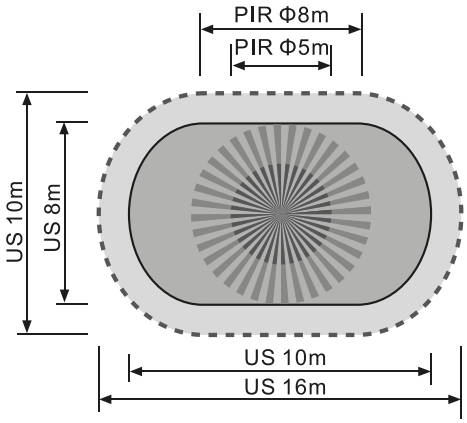


PIR Minor Motion

PIR Major Motion

Ultrasonic Minor Motion

Ultrasonic Major Motion

## Specifications

| | 752/CD1RC | 752/CD2RC |
|---|---|---|
| Supply | AC 240V~ ±10% 50/60Hz | |
| Output | **(Switched Active):**<br>LED lamps: 300W<br>Incandescent: 2000 W | **Output 1 (Switched Active):**<br>LED lamps: 600W<br>Incandescent: 2300 W<br><br>**Output 2 (Voltage Free Relay):**<br>5A for < 250V AC resistive,<br>5A for < 30V DC |
| Time Setting | 5 sec - 30 min | **Time 1 (Output 1):**<br>5 sec – 30 min<br>**Time 2 (Output 2):**<br>10 sec – 60 min |
| IP Rating | IP20 | |

See data sheet on Clipsal.com for full specifications.

# C-Bus

C-Bus is a micro-processor controlled wiring system for lighting control and energy management. In buildings, it allows facility managers and integrators to configure an area or zone as required; such as automatically switching lights off or adjusting light intensity in accordance with natural light levels, plus integrate with the BMS for building wide control. In residential environments, C-Bus offers a total luxury package, controlling multiple devices while integrating with 3rd party systems to achieve a customised solution for the smart home.

With C-Bus, you can achieve an environment of comfort, convenience, security and energy efficiency in any of the following applications:

## Residential

- Homes
- Apartments

## Commercial

- Office
- Warehouse and Industrial
- Education and Health
- Sporting Facilities
- Hotels and Accommodation
- Retail
- Hospitality and Entertainment

Adding sensors make an environment smarter and more efficient. C-Bus sensors allow elements such as presence, occupancy and vacancy to be detected and in turn, control loads or functions plus adjust lighting levels to alter the environment as required.

# 5750WPL-GY C-Bus Outdoor Sensor

Advanced C-Bus PIR sensor suitable for both outdoor commercial and residential applications within a C-Bus system solution.

## Features

- 110° field of view with four detection zones – long range 18 metres, intermediate range 8 metres, short range 4 metres and ultra short range 1.2 metres at 2.4 metres mounting height
- PIR sensor technology for precise motion detection
- Wall or ceiling mounted – for flexibility in installation positioning
- Inbuilt light level sensor supporting a Sunset Switch program
- Capable of controlling up to 4 C-Bus group addresses
- Dual element detectors minimise false triggering
- Features light threshold and PIR sensitivity adjustments on the unit
- Programmable using C-Bus Toolkit commissioning software, offering advanced system features

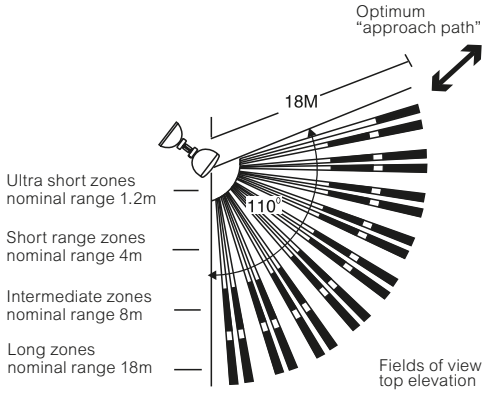


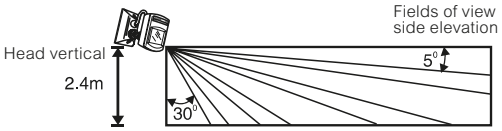


## Specifications

| | 5750WPL-GY |
|---|---|
| Supply | Powered by C-Bus |
| Output | C-Bus |
| Time Setting | 1 second to 18 hours |
| IP Rating | IP66 |

# 5751L-WE C-Bus Corner Mount Sensor

Advanced corner mount C-Bus PIR sensor suitable for both commercial and residential applications within a C-Bus system solution.

## Features

- 90° field of view, with detection range 6 x 6 metre, at 2.4 metre mounting height
- PIR sensor technology for presence and occupancy detection
- Surface mount for corner room installation
- Inbuilt light level sensor supporting a Sunset Switch program
- Capable of controlling up to 4 C-Bus group addresses
- Dual element detectors minimise false triggering
- Features light threshold and PIR sensitivity adjustments on the unit
- Programmable using C-Bus Toolkit commissioning software, offering advanced system features

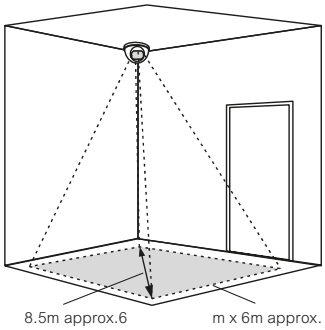


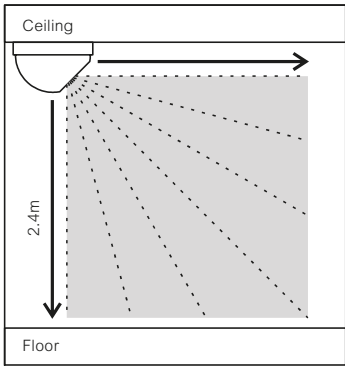


## Specifications

| | 5751L-WE |
|---|---|
| Supply | Powered by C-Bus |
| Output | C-Bus |
| Time Setting | 1 second to 18 hours |
| IP Rating | Suitable for indoor use |

# 5753L C-Bus 360° Flush Mount Sensor

# 5753PEIRL C-Bus 360° Flush Mount, Multi Sensor

Advanced C-Bus sensor including PIR sensor, Light Level sensor and an Infrared receiver (5753PEIRL only). Suitable for both commercial and residential applications within a C-Bus system solution.

## Features

- 360° field of view, with detection range 15 metre diameter, at 2.4 metre mounting height
- PIR sensor technology for precise motion and occupancy detection
- Light level sensor for light level maintenance (daylight harvesting)
- Flush mount for unobtrusive appearance
- Features a Sunset Switch program
- Capable of controlling up to 8 C-Bus group addresses or 8 C-Bus scenes
- Supports corridor linking for commercial building applications
- Dual element detectors minimise false triggering
- Programmable using C-Bus Toolkit commissioning software, offering advanced system features

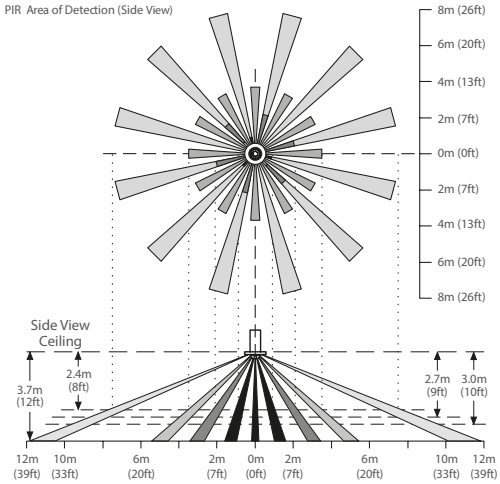


## Additional features of 5753PIERL

- IR receiver for C-Bus control from a handheld remote

## Specifications

| | 5753L 5753PEIRL |
|---|---|
| Supply | Powered by C-Bus |
| Output | C-Bus |
| Time Setting | 1 second to 18 hours |
| IP Rating | Suitable for indoor use |

# 5754ODPE C-Bus 360° Surface Mount Sensor

# 5754ODPEIR C-Bus 360° Surface Mount, Multi Sensor

Advanced C-Bus sensor including PIR sensor, Light Level sensor and an Infrared receiver (5754ODPEIR only). Suitable for both commercial and residential applications within a C-Bus system solution.

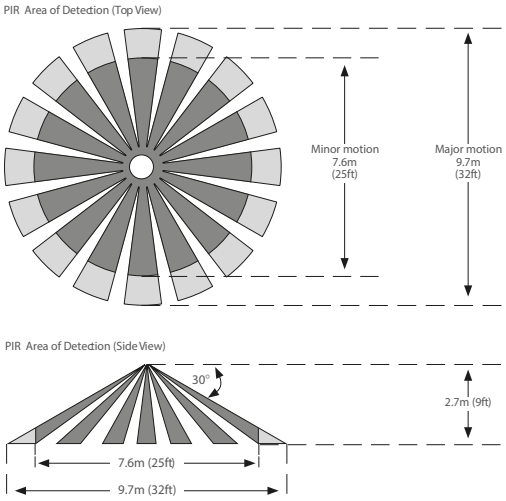


## Features

- 360° field of view, with detection range of 10 metre diameter, at 2.4 metre mounting height
- PIR sensor technology for precise indoor motion and occupancy detection
- Light level sensor for light level maintenance (daylight harvesting)
- Surface mount for quick mounting onto solid surface such as masonary/slab or wood
- Low-profile surface mount design – extends only 33mm from the mounting surface
- Features a Sunset Switch program
- Capable of controlling up to 8 C-Bus group addresses or 8 C-Bus scenes
- Supports corridor linking for commercial building applications
- Dual element detectors minimise false triggering
- Features light threshold & PIR sensitivity adjustments on the unit
- Programmable using C-Bus Toolkit commissioning software, offering advanced system features

## Additional features of 5754ODPEIR

- IR receiver for C-Bus control from a handheld remote

## Specifications

| | 5754ODPE | 5754ODPEIR |
|---|---|---|
| Supply | Powered by C-Bus | |
| Output | C-Bus | |
| Time Setting | 1 second to 18 hours | |
| IP Rating | Suitable for indoor use | |

# DALIcontrol

DALIcontrol is a lighting control system built on the DALI (Digital Addressable Lighting Interface) international standard providing a single interface for all electronic control gear (light sources) and electronic control devices (lighting controllers) and is perfectly tailored to control office lighting in multi-storey buildings. The DALIcontrol Native, Simple and Advanced solutions provide the ability to scale a lighting system from a room, to a floor, to a complete building and beyond. Each DALIcontrol system can utilise a mixture of DALI devices which can include DALIcontrol switches and sensors plus DALIcontrol Line Controllers to control lighting and exit and emergency fittings on DALI lines.

DALIcontrol sensors are an important component for intelligent lighting control within a DALI system and make an environment smarter and more efficient. DALIcontrol sensors allow elements such as presence, occupancy and vacancy to be detected and in turn, control loads or functions plus adjust lighting levels to alter the environment as required.

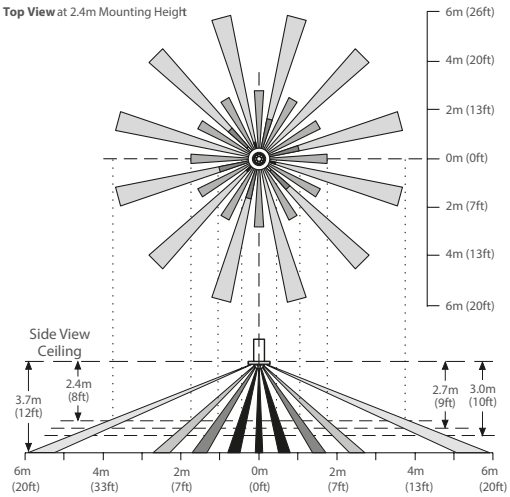


## DCDALMS360 DALIcontrol 360° Flush Mount Motion Sensor

Advanced DALIcontrol motion sensor suitable for commercial lighting control applications within a DALI system solution.

### Features

- 360° field of view, with detection range of 10 metre diameter, at 2.4 metre mounting height
- PIR sensor technology for precise motion and occupancy detection
- Light level sensor for light level maintenance (daylight harvesting)
- Flush mount for unobtrusive addition to room
- Quickly mounts onto ceiling tiles or cavity ceilings
- Supports linked control of PIR or Lux sensing for the same targets
- Configurable on and off actions
- Up to 4 switchable profiles
- Features light threshold and PIR sensitivity adjustments on the unit
- Programmable using DALIBuildings commissioning software, offering advanced system features

### Specifications

| | DCDALMS360 |
|---|---|
| Supply | Powered by DALI |
| Output | DALI |
| Time Setting | 1 second to 255 minutes |
| IP Rating | Suitable for indoor use |

# DCDAL31MOD DALIcontrol 30 Series Mechanism Motion Sensor

Advanced DALIcontrol motion sensor suitable for commercial lighting control applications within a DALI system solution.

## Features

- 120° field of view, with detection range 5 metre diameter, at 2.7 metre mounting height
- PIR sensor technology for precise motion and occupancy detection
- 30M format – suits Clipsal gridplate or DALIcontrol housing fitment
- Detection range typically 5 metres from the lens, when installed in wall
- Configurable on and off actions
- Up to 4 switchable profiles
- Programmable using DALIBuildings commissioning software, offering advanced system features

## Specifications

| | DCDAL31MOD |
|---|---|
| Supply | Powered by DALI |
| Output | DALI |
| Time Setting | 1 second to 255 minutes |
| IP Rating | Suitable for indoor use |

Top View at 2.7m Mounting Height

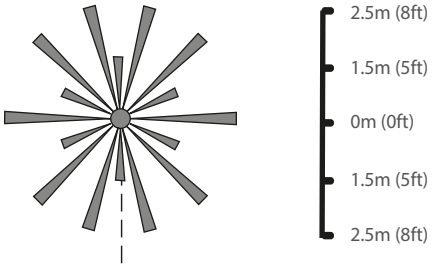


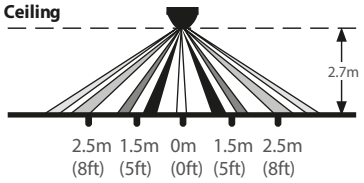


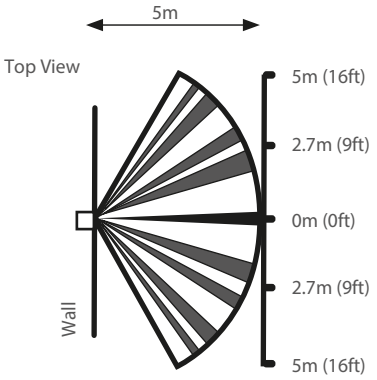


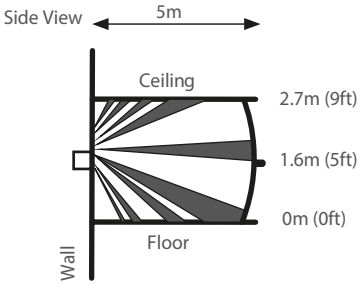

# Clipsal Lighting and Sensors Solutions

Sensor technology has always been a great way to improve performance and lifespan of lighting in any installation, as well as reducing running costs by only having the light on when it's needed.

When you combine this with Clipsal's range of energy efficient LED lighting you start to create a solution that can truly bring maximum benefits into your building.

As with our large range of sensor products, our broad range of luminaries provides an option for almost every one of your lighting needs. With products suited for residential, commercial and industrial applications we take care to ensure our offers can withstand the large inrush currents and harsh running conditions LEDs can create. Testing both sensor and luminaire together gives you every assurance that when you put the combination into your installation you can rest easy it is Clipsal tested and backed to perform.

## Floodlighting

Whether it be lighting a large surrounding area of a commercial building or subtly illuminating the outdoor living space at home, Clipsal has a range of LED Floodlights to suit your needs. From our high powered FLH series that can offer security lighting in public places to our sleek and low profile FLS series with its softer light output that is more suitable for the home alfresco area, our Floodlights allow you to continue to live even when the sun goes down.

These lights increase in functionality when you add one of our outdoor senor products like a 750WPR, with its leading range and sensing technology. This means the lights are on only when you are in the area and wait till you leave it before turning them off.

FLH Series

FLS Series

## Exterior Batten Range

Excellent for commercial and residential applications, schools, car parks, security purposes, public buildings, carports and garages these fittings are manufactured with a robust construction that shields the high output LED technology to maintain maximum light output and lamp life. Designed to provide high levels of illumination under adverse conditions where reliable performance is crucial, the polycarbonate diffuser provides not only resistance from external impact but an even distribution of light.

In commercial security installations, pairing these fittings with our 5754ODPE allows the control of these luminaires do be performed automatically as  the natural light fades and artificial illuminance is required

TUFF Series

TPWP Series

## Downlights

LED Downlights are suitable for multiple illumination applications from residential to commercial buildings. The slightly recessed frosted diffuser ensures reduced glare and soft glow output. Warmer light output is perfect for areas that experience high traffic and entertainment, while the cooler output versions are great for working environments that require maximum illumination. The TPDL1C1 Series comes with an integrated colour temperature selector switch enables the choice of 3000K, 4000K and 6000K outputs to ensure the perfect illumination to suit your needs.

Adding and internal sensor with the appropriate sensing range and direction allows for these lights to be activated when you approach from a certain direction or only when you're standing directly underneath. Selecting the right one is up to you.

TPDL1C1 Series

TPDL300 Series

# Standalone 240V Selection Guide

| | | | | | | | |
|---|---|---|---|---|---|---|---|
| | **PIR Motion Sensor Surface Mount** | **PIR Motion Sensor Flush Mount** | | **PIR Motion Sensor Corner Mount** | | **PIR Motion Sensor Outdoor** | |
| Cat Number | 753SSR-WE | 753R-WE | 753-WE | 751R-WE | 751-WE | 750WPR-GY | 750WP-GY |
| Standalone or System Sensor | Standalone | Standalone | | Standalone | | Standalone | |
| Supply Voltage | 240v, 50Hz | 240V, 50Hz | | 240V, 50Hz | | 240V, 50Hz | |
| Design | 3-Wire | 3-Wire | 2-Wire | 3-Wire | 2-Wire | 3-Wire | 2-Wire |
| Special Feature | High Sensitivity | Unobstrusive robust design | | Room corner installation | | VEET approved, high robustness | |
| Sensing Type Technology | PIR (4 pyro sensors), Precise Motion detection (fine movements) | PIR, Motion detection | | PIR, Motion detection | | PIR, Motion detection | |
| IP Rating | IP54 | IP20 | | IP20 | | IP66 | |
| Mounting | Ceiling, surface | Recessed Ceiling | | Corner, ceiling, surface | | Wall, Ceiling | |
| Detection Angle | 360° | 360° | | 90° | | 110° | |
| Detection Range | Ø 24m at H = 2.5m | Ø 10m at H = 2.4m | | 6 x 6 m | | 18 m | |
| Timer Setting | 5 sec – 15 min<br>Pulse mode | 5 sec – 20 min | | 5 sec – 20 min | | 5 sec – 20 min | |
| Light Level Sensor | YES | YES | | YES | | YES | |
| Material Penetration | NO | NO | | NO | | NO | |
| Inbuilt Manual Override | YES (load on for 4 hrs) | NO (use separate switch to load) | | NO (use separate switch to load) | | NO (use separate switch to load) | |
| IR Remote Control | NO | NO | | NO | | NO | |
| Connectivity (Voltage free output for C-Bus or HRC connection) | NO | NO | | NO | | NO | |
| Output Ratings | 240V~10A | 240V~ 10A | 240V~ 2A (40W min) | 240V~10A | 240V~ 2A (40W min) | 240V~10A | 240V~5A (40W min) |
| Warranty | 3 year | 2 year | | 2 year | | 5 year | |
| Suggested Application | Car parks, garages | Homes, small offices | | Toilets, bathrooms | | Car parks, entrance ways, garage doors, driveways, porches, backyards | |
| With Typical Clipsal Lighting Load | TPWPLED2 - Battern, LED weatherproof | TPLP2 - Panel LED | | CLC22LED - Circular LED | | FLS20LED - LED Flood lights | |

| | | | | | | |
|---|---|---|---|---|---|---|
| **PIR Motion Sensor Flush Mount Gimbal** | | **Dual-Tech Occupancy Sensor** | | **Microwave Sensor** | **PIR Sensor, Master DALI Output PIR Sensor, Slave** | **PIR Sensor Wide Range** |
| 753CF1 | 753CF2 | 752/CD1RC | 752/CD2RC | 752HR2RC | 752DALIRC (Master)<br>752DALIS (Slave) | 752IR2RC |
| Standalone | | Standalone | | Standalone | Standalone | Standalone |
| 220 - 240V, 50 / 60Hz | | 240Va.c. ±10% / 50Hz | | 220-240Va.c., 50 / 60 Hz | 220-240Va.c., 50 / 60 Hz | 220-240Va.c., 50 / 60 Hz |
| 3-Wire | | 3-Wire | | 3-Wire | 3-Wire | 3-Wire |
| Simple, unobstrusive flush design, gimble head | | Dual technology for high accurancy | | Detection for highbays | Daylight harvesting, DALI broadcast outputs | Wide detection |
| PIR, Motion detection | | Dual (PIR and/or Ultrasonic), Motion and Occupancy detection (fine movement) | | High Frequency Dopler Effect, Motion and Occupancy detection (fine movement) | PIR, Motion detection | PIR, Motion detection |
| IP20 | | IP20 | | IP40 (Flush)<br>IP42 (Surface) | IP40 (Flush)<br>IP42 (Surface) | IP40 (Flush)<br>IP42 (Surface) |
| Flush for false ceiling | | Ceiling (Flush/Surface) | | Ceiling (Flush/Surface) | Ceiling (Flush/Surface) | Ceiling (Flush/Surface) |
| 360° | | 360° | | 360° | 360° | 360° |
| Ø 7m | | PIR: Ø 8m US: 10x16m | | Ø 10m at H = 5,5 - 10m<br>Ø 14m at H = 2,5 - 5m | Ø 8m at H = 2.5m | Ø 30m |
| 30s -30min<br>Pulse mode | Channel 1:<br>30 sec – 30 min<br>Channel 2:<br>10 sec – 15 min | 5 sec – 30 min | Channel 1:<br>5 sec – 30 min<br>Channel 2:<br>10 sec – 60 min | Channel 1:<br>10 sec – 30 min, 1s pulse<br>Channel 2:<br>10 sec – 60 min | 1 - 60 min<br>Pulse mode | Channel 1: ww<br>10 sec – 30 min, 1s pulse<br>Channel 2:<br>10 sec – 60 min, 5s pulse |
| YES | | YES | | YES | YES | YES |
| NO | | NO | | Wood, glass, thin brick | NO | NO |
| NO (use separate switch to load) | | YES | | YES | YES | YES |
| NO | | YES | | YES | YES | YES |
| NO | YES - via Control System Aux input (using Ch 2) | YES - via Control System Aux input (using Ch 2) | NO | YES - via Control System Aux input (using Ch 2) | NO | YES - via Control System Aux input (using Ch 2) |
| 240V, 4A max 100W LED<br>SA Resistive motor: 100W | | 240V~8A | 240V~10A / 5A | Load 1: 220-240 V~, 8A max, 100W LED<br>Load 2: 100W Motor 5A res | Dual channel: Max. 25 DALI ballasts, - 16V d.c. , 50mA max. | Load 1: 220-240 V~, 8A max, 100W LED<br>Load 2: 100W Motor 5A res |
| 3 year | | 2 year | | 3 year | 3 year | 3 year |
| Homes, small offices | | Public conveniences, open plan offices, class rooms, libraries/studies | | Warehouses, gyms, hotel lobbies, staircases, carparks | Class rooms, conference rooms, lobbies, retail stores, offices | Lobby, warehouses, offices, corridors, function rooms |
| TPDL1C1 - LED Downlights | | TPLP - Panel LED | | TPHBM1 - High Bay LED | TPLP series | TPDL402H2 - LED Downlight 35W |

# System Sensors Selection Guide

| | | | | |
|---|---|---|---|---|
| | **C-Bus Multi-Sensor, PIR, Light Level and IR Flush Ceiling Mount** | **C-Bus Multi-Sensor, PIR Light Level and IR Surface Mount** | **C-Bus Sensor PIR and Light Level Flush Ceiling Mount** | **C-Bus Sensor PIR and Light Level Surface Mount** |
| Cat Number | 5753PEIRL | 5754ODPEIR | 5753L | 5754ODPE |
| Standalone or System Sensor | C-Bus System | C-Bus System | C-Bus System | C-Bus System |
| Supply Voltage | C-Bus | C-Bus | C-Bus | C-Bus |
| Special Feature | Native C-Bus Multi sensor for system based occupancy control & daylight harvesting | Native C-Bus Multi sensor for system based occupancy control & daylight harvesting | Native C-Bus PIR sensor for system based occupancy control & daylight harvesting | Native C-Bus PIR sensor for system based occupancy control & daylight harvesting |
| Sensor Technology | PIR / PE | PIR / PE | PIR / PE | PIR / PE |
| IP Rating | Indoor | Indoor | Indoor | Indoor |
| Mounting | Flush ceiling | Surface | Flush ceiling | Surface |
| Detection Angle | 360° | 360° | 360° | 360° |
| Detection Range | Ø 15m at H- 2.4m | Ø 10m at H- 2.4m | Ø 15m at H- 2.4m | Ø 10m at H- 2.4m |
| Timer Setting | 1 second to 18 hrs, 12 mins, 15 secs (1 sec intervals) | 1 second to 18 hrs, 12 mins, 15 secs (1 sec intervals) | 1 second to 18 hrs, 12 mins, 15 secs (1 sec intervals) | 1 second to 18 hrs, 12 mins, 15 secs (1 sec intervals) |
| Light Level Sensor | YES | YES | YES | YES |
| Material Penetration | NO | NO | NO | NO |
| Manual Override | YES | YES | YES | YES |
| IR Control | YES - C-Bus IR remote control | YES - C-Bus IR remote control | NO | NO |
| Connectivity | Can control C-Bus connected loads | Can control C-Bus connected loads | Can control C-Bus connected loads | Can control C-Bus connected loads |
| Output Ratings | C-Bus | C-Bus | C-Bus | C-Bus |
| Design | C-Bus | C-Bus | C-Bus | C-Bus |
| Warranty | 2 year | 2 year | 2 year | 2 year |
| Suggested Application | Commercial, Residential, install flush into ceiling | Commercial, Residential, install onto ceiling or slab surface | Commercial, Residential, install flush into ceiling | Commercial, Residential, install onto ceiling or slab surface |
| With Typical Clipsal Lighting Load | N/A | N/A | N/A | N/A |

| | | | |
|---|---|---|---|
| **C-Bus PIR Occupancy Sensor Outdoor** | **C-Bus PIR Occupancy Sensor Corner Mount** | **DALIcontrol PIR Motion Sensor 30 Series Mechanism** | **DALIcontrol Motion Sensor Flush Ceiling Mount** |
| 5750WPL-GY | 5751L-WE | DCDAL31MOD | DCDALMS360 |
| C-Bus System | C-Bus System | DALIcontrol System | DALIcontrol System |
| C-Bus | C-Bus | DALI | DALI |
| Native C-Bus PIR sensor for system based occupancy control | Native C-Bus PIR sensor for system based occupancy control | Native DALIcontrol PIR sensor for system based occupancy control | Native DALIcontrol Multi sensor for system based occupancy control & daylight harvesting |
| PIR | PIR | PIR | PIR |
| IP66 | Indoor | Indoor | Indoor |
| Surface | Surface | Grid plate or ceiling housing | Flush |
| 110° | 90° | 120° | 360° |
| up to 18 metres from the unit at H- 2.4m | 6m x 6m at H- 2.4m | Ø 5m at H- 2.7m | Ø 10m at H = 2.4m |
| 1 second to 18 hrs, 12 mins, 15 secs (1 sec intervals) | 1 second to 18 hrs, 12 mins, 15 secs (1 sec intervals) | 1 min to 255 mins | 1 min to 255 mins |
| YES | YES | NO | YES |
| NO | NO | NO | NO |
| YES | YES | YES | YES |
| NO | NO | NO | NO |
| Can control C-Bus connected loads | Can control C-Bus connected loads | Can control DALI connected loads | Can control DALI connected loads |
| C-Bus | C-Bus | DALI | DALI |
| C-Bus | C-Bus | DALI | DALI |
| 2 year | 2 year | 2 year | 2 year |
| Commercial, Residential, install onto ceiling or slab surface or wall | Commercial, Residential, install onto ceiling or slab surface or wall | Commercial, install into 30M grid plates or DALIcontrol ceiling housing | Commercial, install flush into ceiling |
| N/A | N/A | N/A | N/A |

Life Is On | CLIPSAL™ by Schneider Electric

**Schneider Electric (Australia) Pty. Ltd.**

33-37 Port Wakefield Road, Gepps Cross, South Australia, 5094
PO Box 132, Enfield Plaza, South Australia, 5085

**clipsal.com**

**Consumer Support Enquiries**

Phone: 1300 669 925
Website: clipsal.com/contactus

**National Customer Care (trade only)**

Phone: 1300 369 233
Email: plugin@clipsal.com.au

November 2017

©2017 Schneider Electric. All Rights Reserved.
Schneider Electric | Life Is On, EcoXpert, and Clipsal are trademarks and the property of Schneider Electric SE, its subsidiaries, and affiliated companies. All other trademarks are the property of their respective owners. 988-20011109_AU-GB