GEORGE LED 390 24000 840 FP 96629088

LED high-bay luminaire

An IP65 single point suspension LED high bay luminaire. Offers a simple, direct and cost-effective one-for-one replacement of traditional HID high bay luminaires. Efficient LEDs (120 lm/W) combined with a lens technology offering a beam angle of 90° reduce waste light. The housing is carefully designed to allow air through the luminaire to privent the components from overheating and ensures optimum performance in industrial environments. Supplied with 3 pin flex & plug (3m length).
Materials:
Body: Aluminum die-cast, black (RAL 9017)
Lense: PC
Complete with 4000K LED, 24000lm. Class I electrical, IP65, IK08.
Luminaire efficacy: 120 lm/W
Rated median useful life: 50.000h L70B50 at 25°C
Weight: 6 kg



TE_GEOR_F_LED_390_persp.jpg

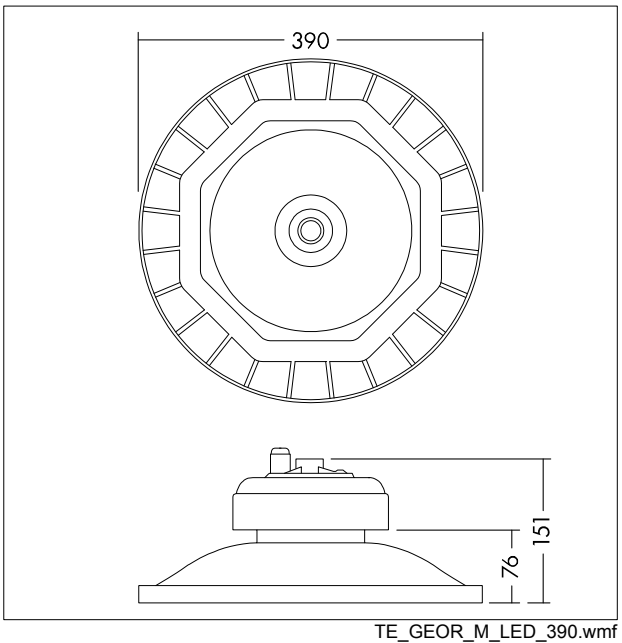

TE_GEOR_M_LED_390.wmf

Light Distribution STD - standard

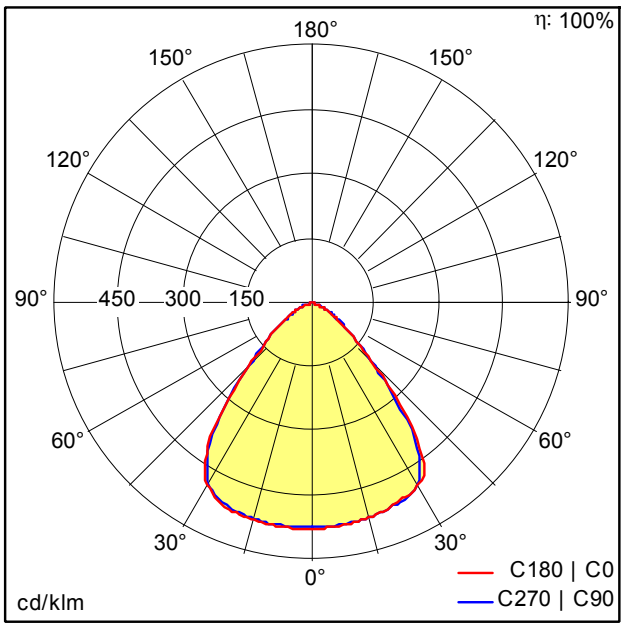

TE_GEORGE_LED_390_24000_840_FP.ldt

- Light Source: LED
- Luminaire luminous flux*: 24000 lm
- Luminaire efficacy*: 120 lm/W
- Colour Rendering Index min.: 80
- Correlated colour temperature*: 4000 Kelvin
- Chromaticity tolerance (initial MacAdam)*: 5
- Rated median useful life*:
  50000h L70 at 25°C
- Ballast: 1x LED_Con
- Luminaire input power*: 200 W Lambda = 0.9

RoHS IP65 IK08 650°C T_{a} -30 +50

We reserve the right to make technical changes without prior notice. 21.02.2018 © ThornEco