RUBY

RUBY LED 1200x600 4500 840 FP 96628982

LED Panel

Recessed LED panel. Elegant and lightweight design with a evenly lit surface. Replaces conventional luminaires with 4 x 36W T8 and offers more than 40% energy saving. Ideal solution for any refurbishment job. Supplied with 3 pin flex & plug (1.5m length).
Photobiological risk group 0. Suitable for recessed, surface and suspended mounting.
Frame: Aluminum, white finish (RAL 9003)
Diffuser: high uniformity PS diffuser
Light guide plate: PMMA
Weight: 4,75 kg



TE_RUBY_F_60_persp.jpg

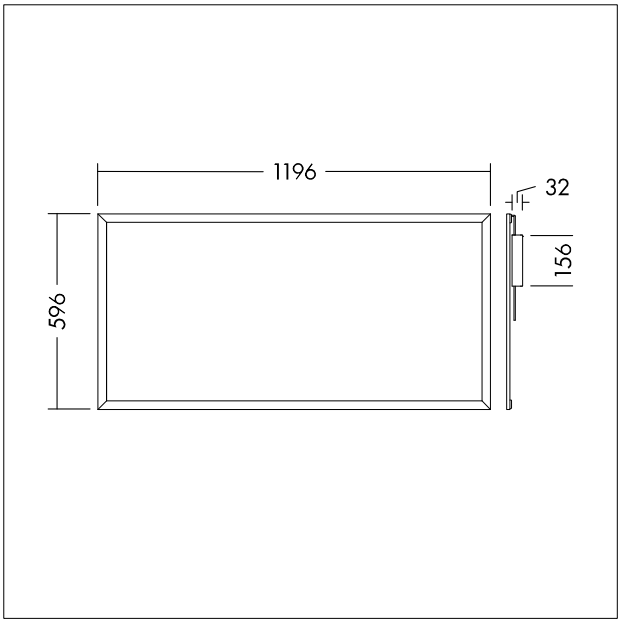

TE_RUBY_M_600.wmf

Light Distribution STD - standard

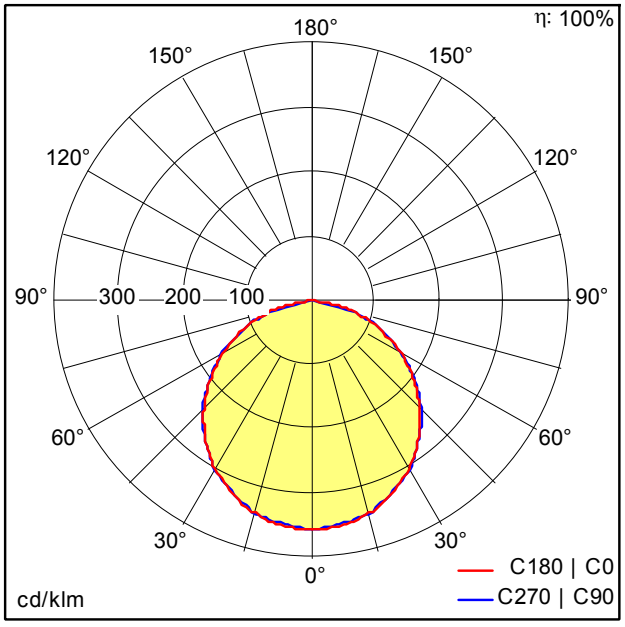

TE_RUBY_LED_1200x600_4500_840_FP.ldt

- Light Source: LED
- Luminaire luminous flux*: 4500 lm
- Luminaire efficacy*: 90 lm/W
- Colour Rendering Index min.: 80
- Correlated colour temperature*: 4000 Kelvin
- Chromaticity tolerance (initial MacAdam)*: 4
- Rated median useful life*:
  50000h L70 at 25°C
- Ballast: 1x LED_Con
- Luminaire input power*: 50 W Power factor = 0.9
- Dimming: Fixed output