Iconic® Outdoor

Technical catalogue

pdl.co.nz/iconic

Life Is On | Schneider Electric

Contents

Presentation	4
Overview	10
Iconic® Outdoor devices	11
Switches	11
Switched Sockets	12
Accessories	15
Wiring Diagrams	17
References	18

Overview

Outdoor like never before

Discover the Iconic® Outdoor range

Redefining weather-proof products, Iconic Outdoor is the innovative new range which achieves a balance between simplicity of installation, clever technology and consumer friendly aesthetics. Designed for the residential market, but with electrical contractors in mind, the range is suitable for zone 2 applications.

Reduced installation time

New patented technology for faster product installation

Proven durability

Designed for New Zealand outdoor living

Future-ready design

PDL Wiser™ smart connectivity and stylish finishes to suit your customer's needs

Clever functionality

Iconic Outdoor is

Practical

All Iconic Outdoor socket outlets are rated to IP54, while switches are rated to IP56, making them suitable for applications such as zone 2 wet areas.

Easy to use

There is no need to drill holes in the products because they are designed with mounting holes outside the sealed region. Because of the location of the mounting holes, no sealant or screw caps are required, resulting in a clean, quick installation.

Ingenious

Seals are built into the frame of all conduit entries, reducing the need for sealants. Pull tabs make it simple to open the seals, making installation a breeze.

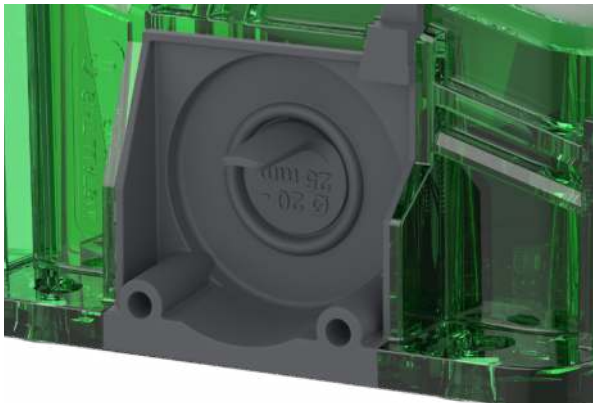

Sockets with a difference

Iconic Outdoor achieves a balance between simplicity of installation and a consumer-friendly aesthetics

One face for the end-user

One face for the installer

Designed alongside electricians

Iconic Outdoor has been developed and tested with Electricians to bring clear innovations, a more reliable form while simplifying many steps in the installation process.

A quick and easy to install outdoor solution that has been tested for durability in New Zealand backyards. Residential focused aesthetic that complements the design of the home. Bringing the indoors outside by enhancing the look of your outdoor entertaining area and increasing functionality with smart home connectivity. Perfect for new builds, renovations, and retrofits.

A hidden press-to-release lock allowing the cover to be easily removed

In-line terminals are faster and easier for electricians during installation

Full over-moulded rubber on the back to minimise slipping on the wall and absorb inconsistencies in the wall surface

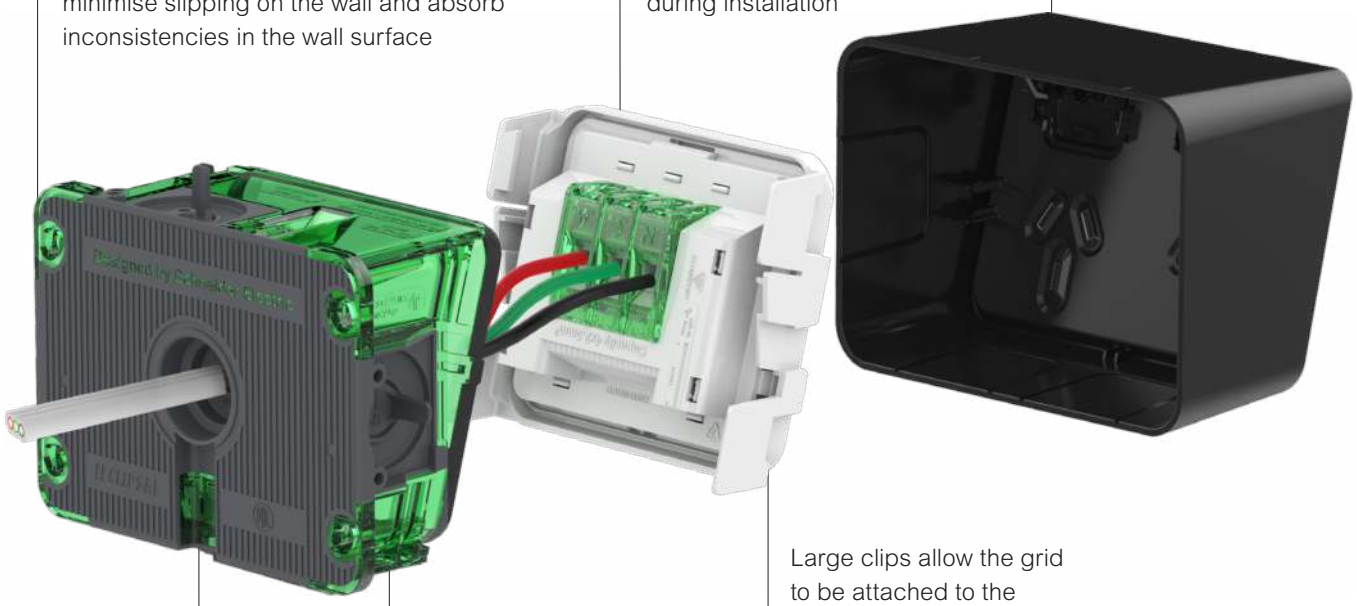

Large clips allow the grid to be attached to the frame in seconds

Punch out drain to minimise water build up, no drilling required

Like Iconic, Iconic Outdoor utilizes a biface system. The highly technical core is uniquely designed for the electrician. The reduced face angle also offers easier plug Insertion for the end-user, all while maintaining its IP rating

Connected Solution

Scalable, from one switch to an entire home

The Iconic Outdoor Single switched socket with timer leverages both BLE (Bluetooth Low Energy) and Zigbee technology, making them ultra-flexible and scalable. Iconic connected devices in BLE default mode can be swapped to Zigbee mode after installation to allow the smart home to evolve over time with the changing needs of the end user.

Download
Wiser by SE app
Schneider Electric's connected technology for homes
Download on the App Store
GET IT ON Google Play

Bluetooth Control

Use the Wiser by SE App to set timers, schedulers or specific device features by pairing your smartphone to an Iconic connected device in BLE mode. Within range, the end user can switch loads through the Wiser by SE App or directly via the wall-mount switch. The Wiser Hub is not required.

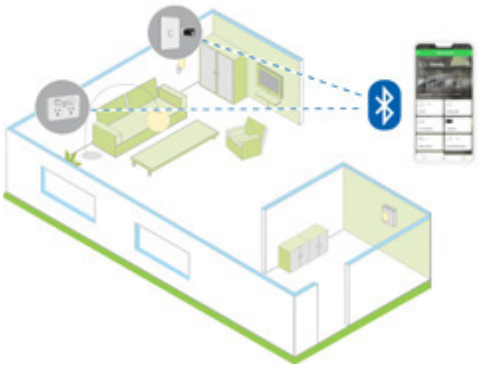

Connected Devices (BLE default)

PDLO394CS-XW
Single switched socket with time scheduler 10A 250V

PDLO394CS-BK
Single switched socket with time scheduler 10A 250V

Wiser System

For an advanced smart home experience, Iconic connected devices in Zigbee mode can interact with other Wiser devices that are connected to the Wiser Hub. This allows the end user to benefit from the full feature set provided by the Wiser system, including Moments, sensor triggered actions, remote access to the home and voice control. The user is still able to control loads via the wall mounted switches or the Wiser by SE App. See the Wiser System user guide for more details.

Iconic Outdoor

The Good Design Awards jury commented:

"The clean and contemporary exterior conceals clever features for safety and sealing, making it a significant departure from existing outdoor electrical accessories."

Range overview

PDL Sockets

Available in different options:

PDLO394-XW
Single switched socket horizontal 10A 250V

PDLO395-XW
Double switched socket horizontal 10A 250V

PDLO394CS-XW
Single switched socket with time scheduler 10A 250V

PDLO394-BK
Single switched socket horizontal 10A 250V

PDLO395-BK
Double switched socket horizontal 10A 250V

PDLO394CS-BK
Single switched socket with time scheduler 10A 250V

PDL Switches

PDLO381-XW
1 gang horizontal switch 20A/16AX 250V

PDLO381-BK
1 gang horizontal switch 20A/16AX 250V

Switches

PDLO381

Iconic Outdoor - 1 gang horizontal switch 20A/16AX 250V

Main	
Range	Iconic Outdoor
Commercial Reference	**PDLO381-XW** **PDLO381-BK**
Product or component type	Switch
Device presentation	Complete product
Provided equipment	Frame, Grid plate, and Skin
Device application	Lighting
Fixing mode	Frame - By screws (horizontal) Skin, Grid, and Frame - Clip together
Type of packing	Box
Sale per indivisible quantity	1
Rating	20 A/16 AX, 250 V ac, 50 Hz
Complementary	
Device mounting	Surface mount
Switch function	1-pole 1/2-way
Actuator	Rocker
Control type	ON/OFF Switch
Number of rockers	1
Number of conduit entries	5x, Ø20/Ø25, Rigid or Flexible
Colour	Extra White (XW), Black (BK)
Surface finish	Matt
M-Rating (Locked rotor current)	M80
Load type	Inductive, 16A fluorescent load and 250W LED lamp load
Ambient air temperature for storage	0...60 °C
Ambient air temperature for operation	0...45 °C
Relative humidity	10...95 %
Electrical durability	9000 operating cycles to AS/NZS 3133
Connections - terminals	4 x screw terminals
Screwdriver shape	Philips No 2, Square drive No 1 (SQ1)
Clamping connection capacity	4 x 1.5 mm², 3 x 2.5 mm²
Wire stripping length	10 mm
Material	Frame : PC (polycarbonate) and TPE (thermoplastic elastomer) Grid plate : PC (polycarbonate) Skin : ABS (acrylonitrile butadiene-styrene) Housing : PC (polycarbonate) Housing : PA66 Locking bar : POM (polyoxymethylene)
Dimensions (H x W x D) mm	85 x 115 x 70
Product weight	0.188 kg
Standards	AS/NZS 3133
Compliance	
Product certification	RCM
IP degree of protection	IP56

Dimensions (mm)

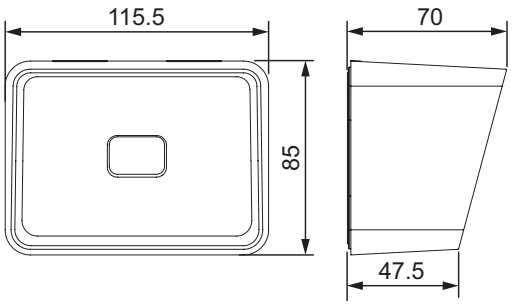

Mounting centres (mm)

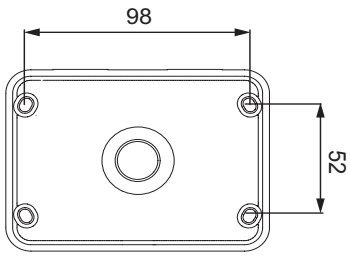

Switched Sockets

PDLO394

Iconic Outdoor - Single switched socket horizontal 10A 250V

Main	
Range	Iconic Outdoor
Commercial Reference	**PDLO394-XW** **PDLO394-BK**
Product or component type	Switched socket
Outlet poles configuration	1P + E with shutter
Device presentation	Complete product
Provided equipment	Frame, Grid plate, and Skin
Fixing mode	Frame - By screws (horizontal) Skin, Grid, and Frame - Clip together
Type of packing	Box
Sale per indivisible quantity	1
Rating	10 A, 250 V ac, 50 Hz
Complementary	
Device mounting	Surface mount
Number of power socket outlets	1
Control type	ON/OFF Switch
Number of rockers	1
Number of conduit entries	5x, Ø20/Ø25, Rigid or Flexible
Colour	Extra White (XW), Black (BK)
Surface finish	Matt
M-Rating (Locked rotor current)	M40
Ambient air temperature for storage	0...60 °C
Ambient air temperature for operation	0...45 °C
Relative humidity	10...95 %
Electrical durability	12000 operating cycles to AS/NZS 3133
Mechanical durability	20000 plugging operating cycles
Connections - terminals	3 x screw terminals
Screwdriver shape	Philips No 2, Square drive No 1 (SQ1)
Clamping connection capacity	3 x 2.5 mm², 2 x 4.0 mm²
Wire stripping length	16 mm
Material	Frame : PC (polycarbonate) and TPE (thermoplastic elastomer) Grid plate : PC (polycarbonate) Shutter : POM (polyoxymethylene) Skin : ABS (acrylonitrile butadiene-styrene)
Dimensions (H x W x D) mm	85 x 115 x 70
Product weight	0.218 kg
Standards	AS/NZS 3112
Compliance	
Product certification	RCM
IP degree of protection	IP54

Dimensions (mm)

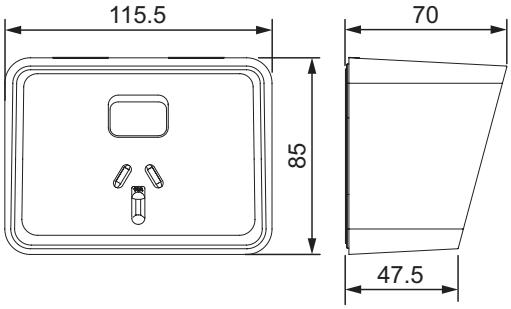

Mounting centres (mm)

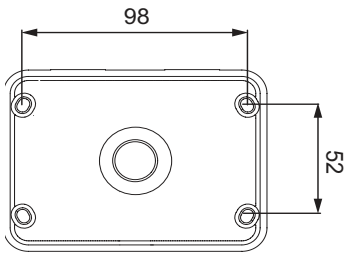

Switched Sockets (cont'd)

PDLO395

Iconic Outdoor - Double switched socket horizontal 10A 250V

Main	
Range	Iconic Outdoor
Commercial Reference	**PDLO395-XW** **PDLO395-BK**
Product or component type	Switched socket
Outlet poles configuration	1P + E with shutter
Device presentation	Complete product
Provided equipment	Frame, Grid plate, and Skin
Fixing mode	Frame - By screws (horizontal) Skin, Grid, and Frame - Clip together
Type of packing	Box
Sale per indivisible quantity	1
Rating	10 A, 250 V ac, 50 Hz
Complementary	
Device mounting	Surface mount
Number of power socket outlets	2
Control type	ON/OFF Switch
Number of rockers	2
Number of conduit entries	5x, Ø20/Ø25, Rigid or Flexible
Colour	Extra White (XW), Black (BK)
Surface finish	Matt
M-Rating (Locked rotor current)	M40
Ambient air temperature for storage	0...60 °C
Ambient air temperature for operation	0...45 °C
Relative humidity	10...95 %
Electrical durability	12000 operating cycles to AS/NZS 3133
Mechanical durability	20000 plugging operating cycles
Connections - terminals	3 x screw terminals
Screwdriver shape	Philips No 2, Square drive No 1 (SQ1)
Clamping connection capacity	4 x 2.5 mm², 3 x 4.0 mm²
Wire stripping length	16 mm
Material	Frame : PC (polycarbonate) and TPE (thermoplastic elastomer) Grid plate : PC (polycarbonate) Shutter : POM (polyoxymethylene) Skin : ABS (acrylonitrile butadiene-styrene)
Dimensions (H x W x D) mm	85 x 115 x 70
Product weight	0.240 kg
Standards	AS/NZS 3112
Compliance	
Product certification	RCM
IP degree of protection	IP54

Dimensions (mm)

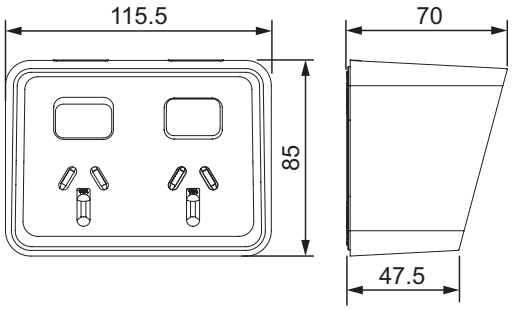

Mounting centres (mm)

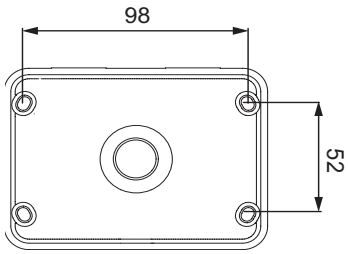

Switched Sockets (cont'd)

PDLO394CS

Iconic Outdoor - Single switched socket with time scheduler 10A 250V

Main	
Range	Iconic Outdoor
Commercial Reference	**PDLO394CS-XW** **PDLO394CS-BK**
Product or component type	Switched socket
Outlet poles configuration	1P + E with shutter
Device presentation	Complete product
Provided equipment	Frame, Grid plate, and Skin
Fixing mode	Frame - By screws (horizontal) Skin, Grid, and Frame - Clip together
Type of packing	Box
Sale per indivisible quantity	1
Rating	10 A, 250 V ac, 50 Hz
Complementary	
Device mounting	Surface mount
Number of power socket outlets	1
Control type	ON/OFF Switch, Wiser by SE App
Number of rockers	1
Number of conduit entries	5x, Ø20/Ø25, Rigid or Flexible
Colour	Extra White (XW), Black (BK)
Surface finish	Matt
M-Rating (Locked rotor current)	M40
Ambient air temperature for storage	0...60 °C
Ambient air temperature for operation	0...45 °C
Relative humidity	10...95 %
Electrical durability	12000 operating cycles to AS/NZS 3133
Mechanical durability	20000 plugging operating cycles
Connections - terminals	3 x screw terminals
Screwdriver shape	Philips No 2, Square drive No 1 (SQ1)
Clamping connection capacity	3 x 2.5 mm², 2 x 4.0 mm²
Wire stripping length	16 mm
Material	Frame : PC (polycarbonate) and TPE (thermoplastic elastomer) Grid plate : PC (polycarbonate) Shutter : POM (polyoxymethylene) Skin : ABS (acrylonitrile butadiene-styrene)
Dimensions (H x W x D) mm	85 x 115 x 82
Product weight	0.292 kg
Standards	AS/NZS 3112, AS/NZS 60669.2.1
Compliance	
Product certification	RCM
IP degree of protection	IP54

Dimensions (mm)

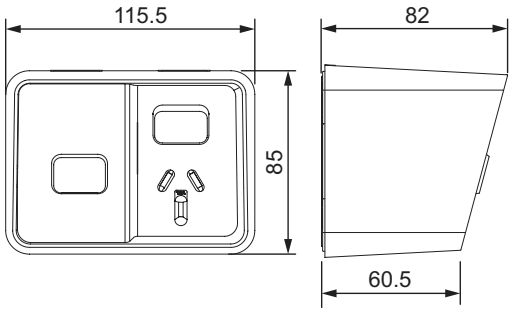

Mounting centres (mm)

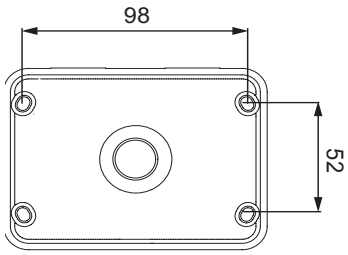

Accessories

PDLO300CE-20

Conduit Cover Ø20mm

Main	
Range	Iconic Outdoor
Commercial Reference	**PDLO300CE-20** **O3000CE-20-BK**
Product or component type	Conduit Cover
Complementary	
Fixing mode	Clip-in
Colour	Extra White (XW), Black (BK)
Surface finish	Matt
Conduit type	Flexible and Rigid
Type of packing	Paper bag
Quantity per set	2
Ambient air temperature for storage	0...60 °C
Ambient air temperature for operation	0...45 °C
Relative humidity	10...95 %
Material	ABS (acrylonitrile butadiene-styrene)
Dimensions (H x W x D) mm	33.5 x 38 x 11.1
Product weight	0.003 kg

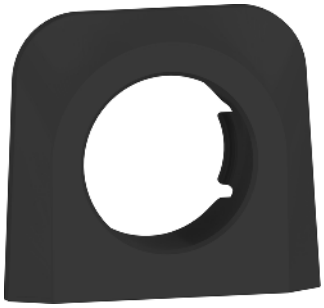

Dimensions (mm)

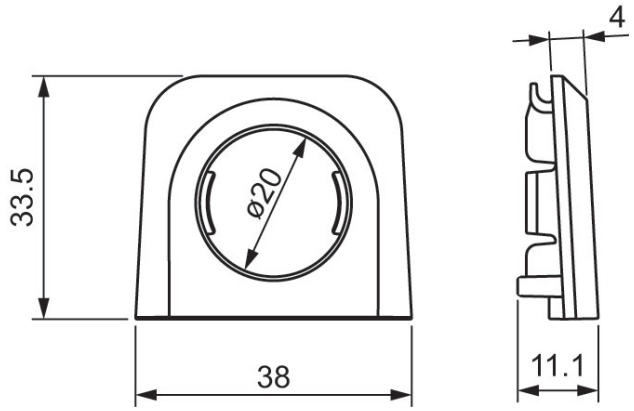

Conduit locations (mm)

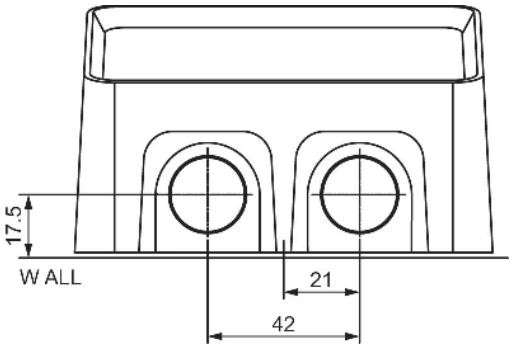

Accessories (cont'd)

PDLO300CE-25

Conduit Cover Ø25mm

Main	
Range	Iconic Outdoor
Commercial Reference	**PDLO300CE-25** **O3000CE-25-BK**
Product or component type	Conduit Cover
Complementary	
Fixing mode	Clip-in
Colour	Extra White (XW), Black (BK)
Surface finish	Matt
Conduit type	Flexible and Rigid
Type of packing	Paper bag
Quantity per set	2
Ambient air temperature for storage	0...60 °C
Ambient air temperature for operation	0...45 °C
Relative humidity	10...95 %
Material	ABS (acrylonitrile butadiene-styrene)
Dimensions (H x W x D) mm	33.5 x 38 x 11.1
Product weight	0.003 kg

Dimensions (mm)

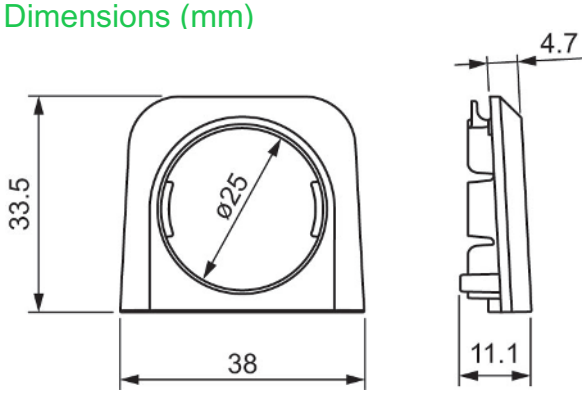

Conduit locations (mm)

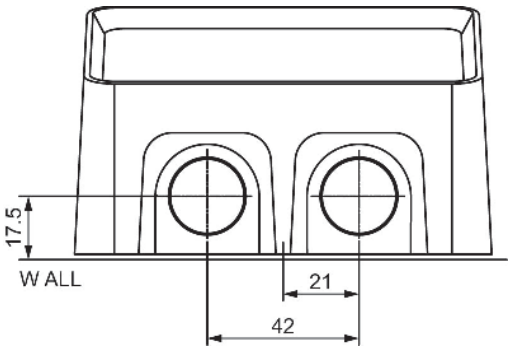

Wiring Diagrams

Single switched sockets with timer - PDLO394CS

Single switched socket wired downstream of the timer

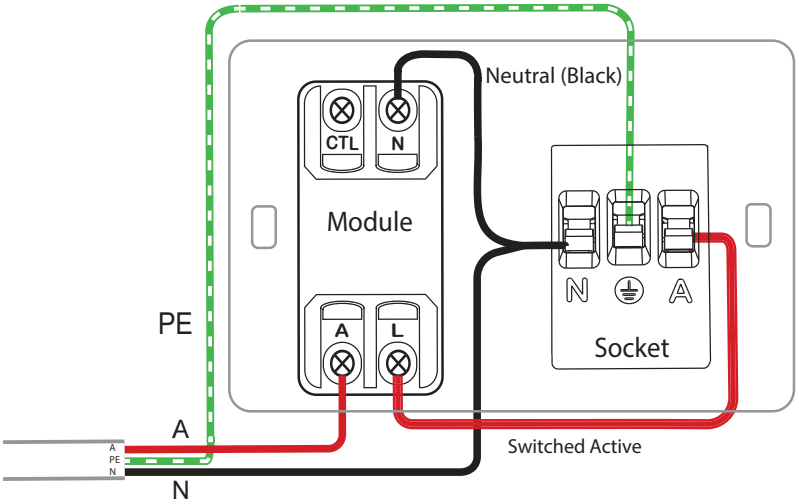

Circuit looped, single switched socket wired downstream of the timer

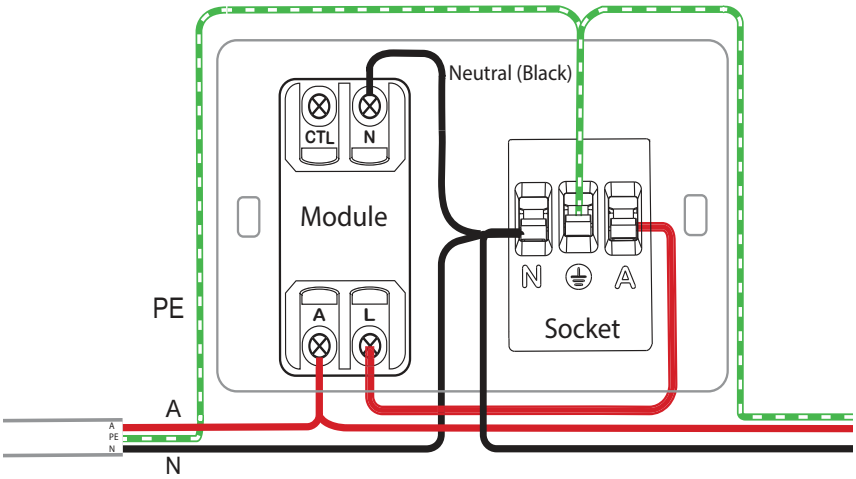

Note: Loop out of the Active terminal "A" of the module, as shown in the diagram. Do not loop out from the Socket Active terminal "A".

References

Ref.	Pages
PDLO381-BK	11
PDLO381-XW	11
PDLO394-BK	12
PDLO394-XW	12
PDLO395-BK	13
PDLO395-XW	13
PDLO394CS-BK	14
PDLO394CS-XW	14
PDLO300CE-20	15
O3000CE-20-BK	15
PDLO300CE-25	16
O3000CE-25-BK	16

Green Premium™

An industry leading portfolio of offers delivering sustainable value

Green Premium™

More than 75% of our product sales offer superior transparency on the material content, regulatory information and environmental impact of our products:

- RoHS compliance
- REACh substance information
- Industry leading # of PEP's*
- Circularity instructions

Discover what we mean by green

Check your products!

The Green Premium program stands for our commitment to deliver customer valued sustainable performance. It has been upgraded with recognized environmental claims and extended to cover all offers including Products, Services and Solutions.

CO_2 and P&L impact through… Resource Performance

Green Premium brings improved resource efficiency throughout an asset's lifecycle. This includes efficient use of energy and natural resources, along with the minimization of CO_2 emissions.

Cost of ownership optimization through… Circular Performance

We're helping our customers optimize the total cost of ownership of their assets. To do this, we provide IoT-enabled solutions, as well as upgrade, repair, retrofit, and remanufacture services.

Peace of mind through… Well-being Performance

Green Premium products are RoHS and REACh compliant. We're going beyond regulatory compliance with step-by-step substitution of certain materials and substances from our products.

Improved sales through… Differentiation

Green Premium delivers strong value propositions through third-party labels and services. By collaborating with third-party organizations we can support our customers in meeting their sustainability goals such as green building certifications.

*PEP: Product Environmental Profile (i.e. Environmental Product Declaration)

Outdoor like never before

Life Is On | Schneider Electric

DESIGN AWARD 2021

GOOD DESIGN AWARD® WINNER

For more information about the Iconic range, contact your local Schneider Electric representative, electrical wholesaler or visit pdl.co.nz/iconic.

Schneider Electric New Zealand Limited.
Level 2, Building 6, 60 Highbrook Drive
Highbrook, Auckland 2013
PO Box 259370, Botany,
Manukau 2163
www.pdl.co.nz

Phone: +64 9 829 0490
Fax: +64 9 829 0491
Website: www.pdl.co.nz
National Customer Care
Phone: 0800 652 999
Email: sales@nz.se.com

02-2022

© 2022 Schneider Electric. All Rights Reserved. PDL Iconic is a registered trademark of Schneider Electric (NZ) Limited.
LSB03180EN-01

PDL

pdl.co.nz/iconic

Life Is On | Schneider Electric