QTi DALI 1X21/39 DIM

QUICKTRONIC INTELLIGENT DALI DIM T5 | ECG dimmable DALI for FL 16 mm



Product family features

- Corridor function for direct connection of ECG to common motion sensor
- Corridor function with pre-programmed light program
- Touch DIM function for free parameterization of light value and turn on time
- Fit for SMART GRID for feedback of consumed mains power and lamp operating hours
- Fit for emergency function for automatic detection of emergency lighting by ECG
- Very low standby power consumption: < 0.5 W
- Lifetime: > 100,000 h (for T = 65 °C at T_c)
- Very high number of switching cycles: up to 300,000
- Dimming range: 1...100 % (3...100 % with compact fluorescent lamp)
- POWER2LAMP function for optimal matching of ECG power to lamp during lamp lifetime
- Line frequency: 0 Hz, 50...60 Hz, rectified AC

Product family benefits

- System+ Guarantee available
- Easy integration in luminaire thanks to same dimensions like DALI GI ECG
- TouchDIM function for easy and inexpensive dimming of several ECGs
- Same luminous flux with direct and alternating current
- Dimming of amalgam lamps without flickering or reduced lifespan
- Automatic restart after lamp replacement

DALI product features

- Control via the DALI interface
- Compliance with the DALI Version-1 and IEC 60929
- Control input protected against overvoltage and polarity reversal (OSRAM ECG)

Touch DIM and Touch DIM Sensor function

- Manual dimming without controller and with standard switches
- Including memory function (double click) and soft start

© 2022, OSRAM GmbH. All rights reserved.

Areas of application

- Suitable for use in emergency lighting systems as per EN 50172/DIN VDE 0108-100
- Installation in emergency lighting systems according to IEC 61347-2-3, appendix J
- Industry
- Open-plan offices, corridors and storage rooms
- Public buildings
- Sports halls and factories
- Strip lighting
- Shop lighting
- Suitable for luminaires of protection class I

© 2022, OSRAM GmbH. All rights reserved.

Technical data

Electrical data

Input voltage AC	198…264 V
Nominal voltage	220…240 V
Mains frequency	50…60 Hz
Input voltage DC	154…276 V
Maximum output power	39 W
Efficiency in full-load	92 % [1]
Operating frequency	44…120 kHz
Max. ECG no. on circuit breaker 10 A (B)	17 [2]
Max. ECG no. on circuit breaker 16 A (B)	28 [2]
Inrush current	24 A

[1] at 230 V, 50 Hz

[2] Type B

Light technical data

Starting time	0.6 s [1]

[1] Optimized preheat start

Dimensions & weight

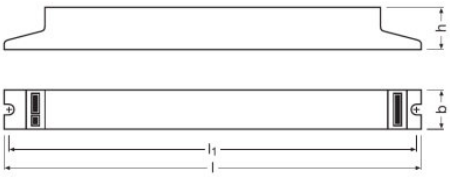

Length	360.0 mm
Width	30.0 mm
Height	21.0 mm
Mounting hole spacing, length	350.0 mm
Product weight	270.00 g
Cable cross-section, output side	0.5…1.5 / 0.5…1.0 mm² [1]
Cable cross-section, input side	0.5…1.5 / 0.5…1.0 mm² [1]

[1] Solid leads / Flexible

© 2022, OSRAM GmbH. All rights reserved.

Temperatures & operating conditions

Ambient temperature range	+10…+50 °C
Permitted rel. humidity during operation	5…85 % [1]

[1] Maximum 56 days/year at 85 %

Lifespan

ECG lifetime	100000 h [1]

[1] At T_{case} = 65°C at T_c point / 10% failure rate

Expected Lifetime

Product name	Lamp group				
QTi DALI 1X21/39 DIM	DULUX L 40 W	ECG ambient temperature [ta]	40	50	-
		Temperature at tc-point [°C]	50	60	-
		Lifetime [h]	100000	100000	-
	HE 21 W	ECG ambient temperature [ta]	40	50	60
		Temperature at tc-point [°C]	50	60	70
		Lifetime [h]	100000	100000	100000
	HO 39 W	ECG ambient temperature [ta]	40	50	60
		Temperature at tc-point [°C]	50	60	70
		Lifetime [h]	100000	100000	100000

Additional product data

Suitable for lamp power (1 lamp)	21…39 W

Capabilities

Dimming interface	DALI / Touch DIM / Touch DIM Sensor
Dimming range	1…100 % [1]
Dimmable	Yes
Overheating protection	Power reduction and switch off at T > 75 °C at the tc point
Suitable for fixtures with prot. class	I
End of lamp life safety shutdown	EOL T.2
Max. cable length to lamp/LED module	1.0 m / 1.5 m
Intended for no-load operation	No

[1] Luminous flux

Certificates & standards

© 2022, OSRAM GmbH. All rights reserved.

Approval marks – approval	VDE / VDE-EMC / EL / EAC / RCM / CCC
Standards	Acc. to EN 55015; EN 55022/Acc. to EN 61547/Acc. to IEC 61000-3-2/EN 61000-3-2/Acc. to EN 61347-2-3/Acc. to EN 60929/Acc. to EN 55015:2006 + A1:2007/Acc. to EN 61000-3-2/Acc. to EN 61547/Acc. to IEC 62386-101:Ed1/Acc. to IEC 62386-102:Ed1
EEI – Energy Label	A1 BAT
Protection class	I
Type of protection	IP20

Logistical data

Commodity code	850410809000

Environmental information

Information according Art. 33 of EU Regulation (EC) 1907/2006 (REACh)	
Date of Declaration	14-04-2022
Primary Article Identifier	4050300870366
Candidate List Substance 1	Lead
CAS No. of substance 1	7439-92-1
Safe Use Instruction	The identification of the Candidate List substance is sufficient to allow safe use of the article.
Declaration No. in SCIP database	4f0f5a41-92de-4b32-8185-800833250b63

© 2022, OSRAM GmbH. All rights reserved.

Wiring Diagram

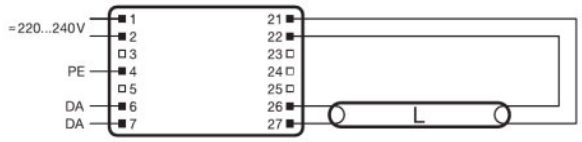

319625_QTi DALI 1x... DIM

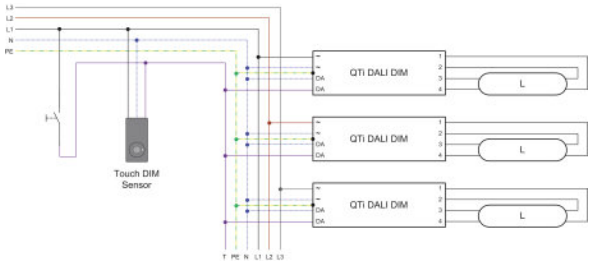

493589_Touch DIM Function - e.g. QTi DALI 1x... DIM

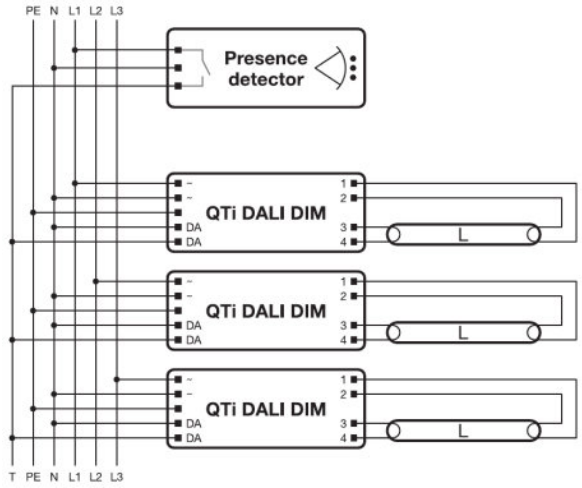

493590_Corridor Function - e.g. QTi DALI 1x... DIM

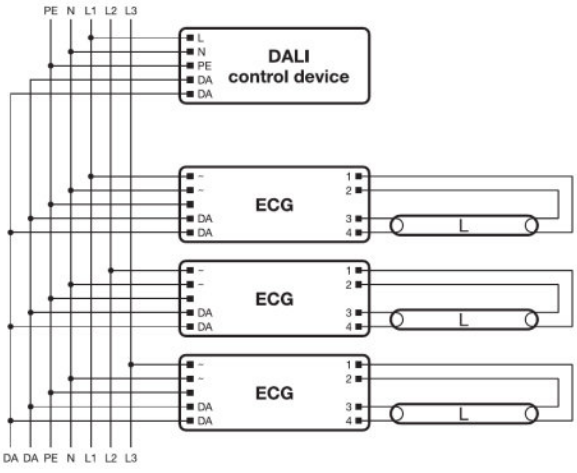

493666_DALI wiring diagram - e.g. QTi DALI 1x... DIM

© 2022, OSRAM GmbH. All rights reserved.

Additional product information

- In order to achieve good radio interference suppression:1. Keep the cable between ECG and lamp as short as possible.2. The single lamp wires must be routed as close as possible to each other, whereas the lines of the different lamp ends must be routed separately.

Download Data

	File
	User instruction QUICKTRONIC QTi T5 DALI DIM
	Addon Technical Information 502689_Frequent switching Quicktronic
	Addon Technical Information 502785_ECG lifetime - QUICKTRONIC (DALI) DIM
	Product Datasheet 321465_ATI QTi DALI 1x2139 DIM (G+GB)
	Certificates 335097_INOTEC
	Certificates QTI DALI VDE 40021252 210920
	Certificates 335135_Manufacturer´s declaration – Burning-in of fluorescent lamps
	Certificates 335153_Manufacturer´s declaration – Low stand-by
	Certificates 335154_Manufacturer´s declaration – EN 55015:2006+A1:2007 (300 MHz)
	Certificates 335169_Manufacturer´s declaration – LampECG combinations: Frequent switching
	Certificates 592319_EAC certificate for Quicktronics QT
	Certificates 504208_VDE-EMC-CERTIFICATE QTI DALI DIM
	Declarations of conformity QUICKTRONIC DIM CE 3364258 190821
	Operating instructions 592411_EAC QTi T5 DALI DIM
	CAD data 3-dim 313432_360x30x21 1881281
	CAD data 3-dim 313433_360x30x21 1881281
	CAD data 3-dim 313453_360x30x21 1881281
	CAD data PDF 313406_360x30x21 1881281

© 2022, OSRAM GmbH. All rights reserved.

Ecodesign regulation information:

Separate control gear and light sources must be disposed of at certified disposal companies in accordance with Directive 2012/19/EU (WEEE) in the EU and with Waste Electrical and Electronic Equipment (WEEE) Regulations 2013 in the UK. For this purpose, collection points for recycling centres and take-back systems (CRSO) are available from retailers or private disposal companies, which accept separate control gear and light sources free of charge. In this way, raw materials are conserved and materials are recycled.

Logistical Data

Product code	Product description	Packaging unit (Pieces/Unit)	Dimensions (length x width x height)	Volume	Gross weight
4050300870366	QTi DALI 1X21/39 DIM	Shipping carton box 20	392 mm x 98 mm x 165 mm	6.34 dm^3	6319.99 g

The mentioned product code describes the smallest quantity unit which can be ordered. One shipping unit can contain one or more single products. When placing an order, for the quantity please enter single or multiples of a shipping unit.

References / Links

For more information on the system guarantee and the terms and conditions of the guarantee visit

- www.osram.com/system-guarantee

Disclaimer

Subject to change without notice. Errors and omission excepted. Always make sure to use the most recent release.

© 2022, OSRAM GmbH. All rights reserved.

QTi DALI 1X21/39 DIM

QUICKTRONIC INTELLIGENT DALI DIM T5 | ECG dimmable DALI for FL 16 mm

Product name	Lamp group	Nominal current	Nominal wattage + Power loss	Power factor λ [PIM]	Luminous flux at 35 °C	Number of lighting outlets
QTi DALI 1X21/39 DIM	DULUX L 40 W	0.18 A	41.80 W	0.98	3500 lm	1
	FC 40 W	0.18 A	42.00 W	0.98	3100 lm	1
	HE 21 W	0.11 A	23.10 W	0.95	1900 lm	1
	HO 39 W	0.18 A	41.80 W	0.98	3100 lm	1

© 2022, OSRAM GmbH. All rights reserved.