New Product

OMRON

Switch Mode Power Supply
S8VS (15/30/60/90/120/180/240/480-W Models)

Multi-Function Indication Monitor for Production Site Visualization ✻

- Status displayed on 3-digit, 7-segment display. ✻
- Signal output notifications at 90 W or more. ✻
- Conformity to various safety standards for global usability.
- Varied coverage with 3-year warranty.

✻ Models with indication monitor

⚠ Refer to *Safety Precautions for All Power Supplies* and *Safety Precautions* on page 32.

For the most recent information on models that have been certified for safety standards, refer to your OMRON website.

Recommended Noise Filter

Noise filter
S8V-NF

For more information, refer to *S8V-NF Noise Filter Data Sheet* (Cat. No. T212-E1).

Model Number Structure

Model Number Legend

Note: Not all combinations are possible. Refer to *List of Models* in *Ordering Information*, below.

S8VS- □□□□□□□□-□
1 2 3 4 5 6

1. Power Ratings
015: 15 W
030: 30 W
060: 60 W
090: 90 W
120: 120 W
180: 180 W
240: 240 W
480: 480 W

2. Output voltage
05: 5 V
12: 12 V
24: 24 V

3. Indication monitor
None: Without indication monitor (standard model)
A: With indication monitor (maintenance forecast monitor)
B: With indication monitor (total run time monitor)
BE: With indication monitor but without alarm output (total run time monitor)

4. Alarm output
None: Sinking (Emitter COM) ✻
P: Sourcing (Collector COM)
Note: No alarm output possible with 60-W models.
✻ Both sinking and sourcing outputs are available for 480-W models.

5. UL Class 2 Output Standards (UL 1310)
None: Does not conform. ✻
S: Conforms.
✻ 15-W, 30-W, and 60-W models conform to Class 2 output standards (UL 1310).
Note: The S option is available only for 90-W models.

6. Terminal Block Form
None: Screw terminal block
F: Screwless terminal block

Note: Estimates can be provided for coatings and other specifications that are not given in the datasheet. Ask your OMRON representative for details.

Ordering Information

List of Models

Note: For details on normal stock models, contact your nearest OMRON representative.

Models without Indication Monitor (Standard Models)

Power ratings	Input voltage	Output voltage	Output current	UL Class 2 Output standards	Model number (screw terminal block)	Model number (screwless terminal block)
15 W	100 to 240 VAC (allowable range: 85 to 264 VAC or 80 to 370 VDC ✻3)	5 V	2.0 A	Yes	**S8VS-01505 ✻1**	---
		12 V	1.2 A	Yes	**S8VS-01512**	
		24 V	0.65 A	Yes	**S8VS-01524**	
30 W		5 V	4.0 A	Yes	**S8VS-03005 ✻2**	
		12 V	2.5 A	Yes	**S8VS-03012**	
		24 V	1.3 A	Yes	**S8VS-03024**	
60 W		24 V	2.5 A	Yes	**S8VS-06024**	**S8VS-06024-F**
90 W			3.75 A	---	**S8VS-09024**	**S8VS-09024-F**
				Yes	**S8VS-09024S**	**S8VS-09024S-F**
120 W			5 A	---	**S8VS-12024**	**S8VS-12024-F**
180 W			7.5 A	---	**S8VS-18024**	**S8VS-18024-F**
240 W			10 A	---	**S8VS-24024**	**S8VS-24024-F**
480 W	100 to 240 VAC		20 A Peak current 30 A (200 VAC)	---	**S8VS-48024**	**S8VS-48024-F**

✻1. The output capacity of the S8VS-01505 is 10 W.
✻2. The output capacity of the S8VS-03005 is 20 W.
✻3. The range for compliance with EC Directives and safety standards (UL, EN, etc.) is 100 to 240 VAC (85 to 264 VAC).

Models with Indication Monitor (Maintenance Forecast Monitor)

Power ratings	Input voltage	Output voltage	Output current	Alarm output *2	UL Class 2 Output standards	Model number (screw terminal block)	Model number (screwless terminal block)
60 W	100 to 240 VAC (allowable range: 85 to 264 VAC or 80 to 370 VDC ✻1)	24 V	2.5 A	---	Yes	**S8VS-06024A**	**S8VS-06024A-F**
90 W			3.75 A	Sinking	---	**S8VS-09024A**	**S8VS-09024A-F**
				Sinking	Yes	**S8VS-09024AS**	**S8VS-09024AS-F**
				Sourcing	---	**S8VS-09024AP**	**S8VS-09024AP-F**
				Sourcing	Yes	**S8VS-09024APS**	**S8VS-09024APS-F**
120 W			5 A	Sinking	---	**S8VS-12024A**	**S8VS-12024A-F**
				Sourcing	---	**S8VS-12024AP**	**S8VS-12024AP-F**
180 W			7.5 A	Sinking	---	**S8VS-18024A**	**S8VS-18024A-F**
				Sourcing	---	**S8VS-18024AP**	**S8VS-18024AP-F**
240 W			10 A	Sinking	---	**S8VS-24024A**	**S8VS-24024A-F**
				Sourcing	---	**S8VS-24024AP**	**S8VS-24024AP-F**
480 W	100 to 240 VAC		20 A Peak current 30 A (200 VAC)	Sinking/ sourcing	---	**S8VS-48024A**	**S8VS-48024A-F**

✻1. The range for compliance with EC Directives and safety standards (UL, EN, etc.) is 100 to 240 VAC (85 to 264 VAC).
✻2. In the *Alarm output* column, “sinking” indicates an emitter COM and “sourcing” indicates a collector COM.

Models with Indication Monitor (Total Run Time Monitor)

Power ratings	Input voltage	Output voltage	Output current	Alarm output *2	UL Class 2 Output standards	Model number (screw terminal block)	Model number (screwless terminal block)
60 W	100 to 240 VAC (allowable range: 85 to 264 VAC or 80 to 370 VDC) ✻1	24 V	2.5 A	---	Yes	**S8VS-06024B**	**S8VS-06024B-F**
90 W			3.75 A	---	---	**S8VS-09024BE**	**S8VS-09024BE-F**
				---	Yes	**S8VS-09024BES**	**S8VS-09024BES-F**
				Sinking	---	**S8VS-09024B**	**S8VS-09024B-F**
				Sinking	Yes	**S8VS-09024BS**	**S8VS-09024BS-F**
				Sourcing	---	**S8VS-09024BP**	**S8VS-09024BP-F**
				Sourcing	Yes	**S8VS-09024BPS**	**S8VS-09024BPS-F**
120 W			5 A	---	---	**S8VS-12024BE**	**S8VS-12024BE-F**
				Sinking	---	**S8VS-12024B**	**S8VS-12024B-F**
				Sourcing	---	**S8VS-12024BP**	**S8VS-12024BP-F**
180 W			7.5 A	---	---	**S8VS-18024BE**	**S8VS-18024BE-F**
				Sinking	---	**S8VS-18024B**	**S8VS-18024B-F**
				Sourcing	---	**S8VS-18024BP**	**S8VS-18024BP-F**
240 W			10 A	---	---	**S8VS-24024BE**	**S8VS-24024BE-F**
				Sinking	---	**S8VS-24024B**	**S8VS-24024B-F**
				Sourcing	---	**S8VS-24024BP**	**S8VS-24024BP-F**
480 W	100 to 240 VAC		20 A Peak current 30 A (200 VAC)	Sinking/ sourcing	---	**S8VS-48024B**	**S8VS-48024B-F**

✻1. The range for compliance with EC Directives and safety standards (UL, EN, etc.) is 100 to 240 VAC (85 to 264 VAC).
✻2. In the *Alarm output* column, “sinking” indicates an emitter COM and “sourcing” indicates a collector COM.
Note: Refer to pages 24 to 25 for the options that available.

Specifications

Ratings/Characteristics

Item		Power ratings	15 W			30 W		
		Output voltage	5 V	12 V	24 V	5 V	12 V	24 V
Efficiency		With 100-VAC input	74% typical	79% typical	83% typical	74% typical	81% typical	85% typical
		With 200-VAC input	73% typical	78% typical	80% typical	74% typical	80% typical	86% typical
Input	Voltage ✻1		100 to 240 VAC (allowable range: 85 to 264 VAC, 80 to 370 VDC ✻5)					
	Frequency ✻1		50/60 Hz (47 to 450 Hz)					
	Current	With 100-VAC input	0.45 A max., 0.34 A typical			0.9 A max., 0.66 A typical		
		With 200-VAC input	0.25 A max., 0.22 A typical			0.6 A max., 0.4 A typical		
	Power factor		---					
	Harmonic current regulation		Conforms to EN61000-3-2					
	Leakage current	With 100-VAC input	0.5 mA max.					
		With 200-VAC input	1.0 mA max.					
	Inrush current ✻2	With 100-VAC input	17.5 A max., 14 A typical					
		With 200-VAC input	35 A max., 28 A typical					
Output	Voltage adjustment range ✻3		–10% to 15% (with V.ADJ)					
	Ripple noise voltage (at rated I/O)		60 mV max.	70 mV max.	60 mV max.	60 mV max.	90 mV max.	150 mV max.
	Input variation influence		0.5% max. (at 85- to 264-VAC input, 100% load)					
	Load variation influence (rated input voltage)		2.0% max. (5 V), 1.5% max. (12 V, 24 V), (with rated input, 0 to 100% load)					
	Temperature variation influence		0.05%/°C max.					
	Startup time (at rated I/O) ✻2	With 100-VAC input	580 ms typical	530 ms typical	600 ms typical	500 ms typical	560 ms typical	560 ms typical
		With 200-VAC input	340 ms typical	360 ms typical	400 ms typical	360 ms typical	380 ms typical	400 ms typical
	Output hold time (at rated I/O) ✻2	With 100-VAC input	39 ms typical	27 ms typical	28 ms typical	31 ms typical	22 ms typical	31 ms typical
		With 200-VAC input	187 ms typical	134 ms typical	134 ms typical	174 ms typical	123 ms typical	140 ms typical
Additional functions	Overload protection ✻2		The range for compliance with EC Directives and safety standards (UL, EN, etc.) is 100 to 240 VAC (85 to 264 VAC).					
	Overvoltage protection ✻2		Yes ✻4					
	Output voltage indication		No					
	Output current indication		No					
	Peak-hold current indication		No					
	Maintenance forecast monitor indication		No					
	Maintenance forecast monitor output		No					
	Total run time monitor indication		No					
	Total run time monitor output		No					
	Undervoltage alarm indication		Yes (color: red)					
	Undervoltage alarm output		No					
	Parallel operation		No (However, backup operation is possible. An external diode is required.)					
	Series operation		Models with 24-V output: Possible for up to 2 Power Supplies (with external diode) Models with 5- or 12-V output: Not possible					
Other	Operating ambient temperature		Refer to the derating curve in *Engineering Data*. (with no icing or condensation)					
	Storage temperature		–25 to 65°C					
	Operating ambient humidity		25% to 85% (Storage humidity: 25% to 90%)					
	Dielectric strength		3.0 kVAC for 1 min. (between all inputs and outputs; detection current: 20 mA) 2.0 kVAC for 1 min. (between all inputs and PE terminals; detection current: 20 mA) 1.0 kVAC for 1 min. (between all outputs and PE terminals; detection current: 20 mA)					
	Insulation resistance		100 MΩ min. (between all outputs and all inputs/ PE terminals) at 500 VDC					
	Vibration resistance		10 to 55 Hz, 0.375-mm single amplitude for 2 h each in X, Y, and Z directions					
	Shock resistance		150 m/s², 3 times each in ±X, ±Y, and ±Z directions					
	Output indicator		Yes (color: green)					
	EMI	Conducted Emissions	Conforms to EN55011 Group1 Class B and based on FCC Class A					
		Radiated Emissions	Conforms to EN55011 Group1 Class B					
	EMS		Conforms to EN61204-3 high severity levels					
	Approved standards		UL 508 (Listing, Class2 Output: Per 1310) UL 60950-1, UL 62368-1 CSA C22.2 No.107.1 (cUL) (Class2 Output: Per CSA C22.2 No.223) CSA C22.2 No.60950-1 (cUR), No.62368-1 EN 50178, EN 60950-1, EN 62368-1 EAC mark, RCM mark					
	SEMI		F47-0706 (With 200-VAC input)					
	Weight		160 g max.			180 g max.		

✻1. Do not use an inverter output for the Power Supply. Inverters with an output frequency of 50/60 Hz are available, but the rise in the internal temperature of the Power Supply may result in ignition or burning.
✻2. For a cold start at 25°C. Refer to *Engineering Data* on page 18 for details.
✻3. If the output voltage adjuster (V. ADJ) is turned, the voltage will increase by more than +15% of the voltage adjustment range. When adjusting the output voltage, confirm the actual output voltage from the Power Supply and be sure that the load is not damaged.
✻4. To reset the protection, turn OFF the input power for three minutes or longer and then turn it back ON.
✻5. The range for compliance with EC Directives and safety standards (UL, EN, etc.) is 100 to 240 VAC (85 to 264 VAC).

Item		Power ratings / Type	60 W		
			Standard	Maintenance forecast monitor	Total run time monitor
Efficiency		With 100-VAC input	84% typical	83% typical	
		With 200-VAC input	83% typical	85% typical	
Input	Voltage ✻1		100 to 240 VAC (allowable range: 85 to 264 VAC or 80 to 370 VDC ✻11)		
	Frequency ✻1		50/60 Hz (47 to 450 Hz)		
	Current	With 100-VAC input	1.7 A max., 1.3 A typical	1.7 A max., 1.3 A typical	
		With 200-VAC input	1.0 A max., 0.68 A typical	1.0 A max., 0.78 A typical	
	Power factor		---		
	Harmonic current regulation		Conforms to EN61000-3-2		
	Leakage current	With 100-VAC input	0.5 mA max.		
		With 200-VAC input	1.0 mA max.		
	Inrush current ✻2	With 100-VAC input	17.5 A max., 14 A typical		
		With 200-VAC input	35 A max., 28 A typical		
Output	Voltage adjustment range ✻3		–10% to 15% (with V. ADJ) (The voltage cannot be adjusted for the S8VS-09024□□□S-□.)		
	Ripple noise voltage (at rated I/O)		70 mV max.	90 mV max.	
	Input variation influence		0.5% max. (at 85- to 264-VAC input, 100% load)		
	Load variation influence (rated input voltage)		1.5% max. (with rated input, 0 to 100% load)		
	Temperature variation influence		0.05%/°C max.		
	Startup time (at rated I/O) ✻2	With 100-VAC input	620 ms typical	460 ms typical	
		With 200-VAC input	400 ms typical	290 ms typical	
	Output hold time (at rated I/O) ✻2	With 100-VAC input	34 ms typical	33 ms typical	
		With 200-VAC input	158 ms typical	154 ms typical	
Additional functions	Overload protection ✻2		105% to 160% of rated load current (101% to 110% of rated load current for the S8VS-09024□□□S-□), inverted L voltage drop, intermittent, automatic reset		
	Overvoltage protection ✻2, ✻4		Yes		
	Output voltage indication ✻5		No	Yes (selectable) ✻6	
	Output current indication ✻5		No	Yes (selectable) ✻7	
	Peak-hold current indication ✻5		No	Yes (selectable) ✻8	
	Maintenance forecast monitor indication ✻5		No	Yes (selectable)	No
	Maintenance forecast monitor output		No		
	Total run time monitor indication ✻5		No		Yes (selectable)
	Total run time monitor output ✻5		No		
	Undervoltage alarm indication ✻5		No	Yes (selectable)	
	Undervoltage alarm output terminals		No		
	Parallel operation		No (However, backup operation is possible. An external diode is required.)		
	Series operation		Yes for up to 2 Power Supplies (with external diode)		
Other	Operating ambient temperature		Refer to the derating curve in . (with no icing or condensation)		
	Storage temperature		–25 to 65°C		
	Operating ambient humidity		25% to 85% (Storage humidity: 25% to 90%)		
	Dielectric strength		3.0 kVAC for 1 min. (between all inputs and outputs/ alarm outputs; detection current: 20 mA) 2.0 kVAC for 1 min. (between all inputs and PE terminals; detection current: 20 mA) 1.0 kVAC for 1 min. (between all outputs/ alarm outputs and PE terminals; detection current for standard models: 30 mA, detection current for models with indication monitor: 20 mA) 500 VAC for 1 min. (between all outputs and alarm outputs; detection current: 20 mA)		
	Insulation resistance		100 MΩ min. (between all outputs/ alarm outputs and all inputs/ PE terminals) at 500 VDC		
	Vibration resistance		10 to 55 Hz, 0.375-mm single amplitude for 2 h each in X, Y, and Z directions 10 to 150 Hz, 0.35-mm single amplitude (5 G max.) for 80 min each in X, Y, and Z directions		
	Shock resistance		150 m/s^2, 3 times each in ±X, ±Y, and ±Z directions		
	Output indicator		Yes (color: green)		
	EMI	Conducted Emissions	Models with indication monitor: Conforms to EN55011 Group1 Class A and based on FCC Class A, Conforms to EN55011 Group1 Class B ✻11 Standard models: Conforms to EN61204-3 EN55011 Group 1 Class B and based on FCC Class A		
		Radiated Emissions	Models with indication monitor: Conforms to EN55011 Group1 Class A, Conforms to EN55011 Group1 Class B ✻11 Standard models: Conforms to EN55011 Group1 Class B		
	EMS		Conforms to EN61204-3 high severity levels		
	Approved standards ✻11		Standard model: UL 508 (Listing; Class 2 Output: Per UL1310) UL 60950-1 (Recognition), UL 62368-1 CSA C22.2 No.107.1 (cUL) (Class 2 Output: Per CSA C22.2 No. 223) CSA C22.2 No.60950-1 (cUR), No.62368-1 EN 50178, EN 60950-1, EN 62368-1 EAC mark, RCM mark With indication monitor: UL 508 (Listing, Class2 Output: Per 1310) UL 60950-1 (Recognition) CSA C22.2 No.107.1 (cUL) (Class2 Output: Per CSA C22.2 No.223) CSA C22.2 No.60950-1 (cUR) EN 50178 (=VDE 0160), EN 60950-1 (=VDE 0805 Teil1) EAC mark, RCM mark, KOSHA S Mark ✻10		
	SEMI ✻11		F47-0706 (With 200-VAC input)		
	Weight		330 g max.		

✻1. Do not use an inverter output for the Power Supply. Inverters with an output frequency of 50/60 Hz are available, but the rise in the internal temperature of the Power Supply may result in ignition or burning.
✻2. For a cold start at 25°C. Refer to *Engineering Data* on page 18 for details.
✻3. If the output voltage adjuster (V. ADJ) is turned, the voltage will increase by more than +15% of the voltage adjustment range (by more than +10% for 240-W models with indication monitor). When adjusting the output voltage, confirm the actual output voltage from the Power Supply and be sure that the load is not damaged.
✻4. To reset the protection, turn OFF the input power for three minutes or longer and then turn it back ON.
✻5. Displayed on 7-segment LED. (character height: 8 mm)
✻6. Resolution of output voltage indication: 0.1 V, Precision of output voltage indication: ±2% (percentage of output voltage value, ±1 digit)
✻7. Resolution of output current indication: 0.1 A; Precision of output current indication: ±5% F.S. ±1 digit max. (specified by rated output voltage)
✻8. Resolution of peak-hold current indication: 0.1 A; Precision of peak-hold current indication: ±5% F.S. ±1 digit max. (specified by rated output voltage); Signal width required for peak-hold current: 20 ms
✻9. A Type and B Type: Sinking, AP Type and BP Type: Sourcing, BE Type: No alarm output.
✻10. S8VS-06024A, S8VS-09024A/AP, S8VS-12024A/AP, S8VS-18024A/AP, and S8VS-24024A/AP only
✻11. The range for compliance with EC Directives and safety standards (UL, EN, etc.) is 100 to 240 VAC (85 to 264 VAC).

Item		Power ratings / Type	90 W		
			Standard	Maintenance forecast monitor	Total run time monitor
Efficiency		With 100-VAC input	83% typical	83% typical	
		With 200-VAC input	84% typical	85% typical	
Input	Voltage ✻1		100 to 240 VAC (allowable range: 85 to 264 VAC or 80 to 370 VDC ✻11)		
	Frequency ✻1		50/60 Hz (47 to 450 Hz)		
	Current	With 100-VAC input	2.3 A max., 1.9 A typical	2.3 A max., 1.9 A typical	
		With 200-VAC input	1.4 A max., 1.0 A typical	1.4 A max., 1.2 A typical	
	Power factor		---		
	Harmonic current regulation		Conforms to EN61000-3-2		
	Leakage current	With 100-VAC input	0.5 mA max.		
		With 200-VAC input	1.0 mA max.		
	Inrush current ✻2	With 100-VAC input	17.5 A max., 14 A typical		
		With 200-VAC input	35 A max., 28 A typical		
Output	Voltage adjustment range ✻3		–10% to 15% (with V. ADJ) (The voltage cannot be adjusted for the S8VS-09024□□□S-□.)		
	Ripple noise voltage (at rated I/O)		250 mV max.	150 mV max.	
	Input variation influence		0.5% max. (at 85- to 264-VAC input, 100% load)		
	Load variation influence (rated input voltage)		1.5% max. (with rated input, 0 to 100% load)		
	Temperature variation influence		0.05%/°C max.		
	Startup time (at rated I/O) ✻2	With 100-VAC input	460 ms typical	660 ms typical	
		With 200-VAC input	300 ms typical	420 ms typical	
	Output hold time (at rated I/O) ✻2	With 100-VAC input	28 ms typical	28 ms typical	
		With 200-VAC input	132 ms typical	136 ms typical	
Additional functions	Overload protection ✻2		105% to 160% of rated load current (101% to 110% of rated load current for the S8VS-09024□□□S-□), inverted L voltage drop, intermittent, automatic reset		
	Overvoltage protection ✻2, ✻4		Yes		
	Output voltage indication ✻5		No	Yes (selectable) ✻6	
	Output current indication ✻5		No	Yes (selectable) ✻7	
	Peak-hold current indication ✻5		No	Yes (selectable) ✻8	
	Maintenance forecast monitor indication ✻5		No	Yes (selectable)	No
	Maintenance forecast monitor output		No	Yes (transistor output), 30 VDC max., 50 mA max. ✻9	No
	Total run time monitor indication ✻5		No		Yes (selectable)
	Total run time monitor output ✻5		No		Yes (transistor output), 30 VDC max., 50 mA max. ✻9
	Undervoltage alarm indication ✻5		No	Yes (selectable)	
	Undervoltage alarm output terminals		No	Yes (transistor output), 30 VDC max., 50 mA max. ✻9	
	Parallel operation		No (However, backup operation is possible. An external diode is required.)		
	Series operation		Yes for up to 2 Power Supplies (with external diode)		
Other	Operating ambient temperature		Refer to the derating curve in . (with no icing or condensation)		
	Storage temperature		–25 to 65°C		
	Operating ambient humidity		25% to 85% (Storage humidity: 25% to 90%)		
	Dielectric strength		3.0 kVAC for 1 min. (between all inputs and outputs/ alarm outputs; detection current: 20 mA) 2.0 kVAC for 1 min. (between all inputs and PE terminals; detection current: 20 mA) 1.0 kVAC for 1 min. (between all outputs/ alarm outputs and PE terminals; detection current for standard models: 30 mA, detection current for models with indication monitor: 20 mA) 500 VAC for 1 min. (between all outputs and alarm outputs; detection current: 20 mA)		
	Insulation resistance		100 MΩ min. (between all outputs/ alarm outputs and all inputs/ PE terminals) at 500 VDC		
	Vibration resistance		10 to 55 Hz, 0.375-mm single amplitude for 2 h each in X, Y, and Z directions 10 to 150 Hz, 0.35-mm single amplitude (5 G max.) for 80 min each in X, Y, and Z directions		
	Shock resistance		150 m/s^2, 3 times each in ±X, ±Y, and ±Z directions		
	Output indicator		Yes (color: green)		
	EMI	Conducted Emissions	Models with indication monitor: Conforms to EN55011 Group1 Class A and based on FCC Class A, Conforms to EN55011 Group1 Class B ✻11 Standard models: Conforms to EN61204-3 EN55011 Group 1 Class B and based on FCC Class A		
		Radiated Emissions	Models with indication monitor: Conforms to EN55011 Group1 Class A, Conforms to EN55011 Group1 Class B ✻11 Standard models: Conforms to EN55011 Group1 Class B		
	EMS		Conforms to EN61204-3 high severity levels		
	Approved standards ✻11		Standard model: UL 508 (Listing) (S8VS-09024S-□ only): UL 508 (Listing, Class2 Output: Per 1310) UL 60950-1 (Recognition), UL 62368-1 CSA C22.2 No.107.1 (cUL) (S8VS-09024S-□ only): CSA C22.2 No.107.1 (cUL) (Class2 Output: Per CSA C22.2 No.223) CSA C22.2 No.60950-1 (cUR), No.62368-1 EN 50178, EN 60950-1, EN 62368-1 EAC mark, RCM mark With indication monitor: UL 508 (Listing) (S8VS-09024□□S-□ only): UL 508 (Listing, Class2 Output: Per 1310) UL 60950-1 (Recognition) CSA C22.2 No.107.1 (S8VS-09024□□S-□ only): CSA C22.2 No.107.1 (cUL) (Class2 Output: Per CSA C22.2 No.223) CSA C22.2 No.60950-1 (cUR) EN 50178 (=VDE 0160), EN 60950-1 (=VDE 0805 Teil1) EAC mark, RCM mark, KOSHA S Mark ✻10		
	SEMI ✻11		F47-0706 (With 200-VAC input)		
	Weight		490 g max.		

✻1. Do not use an inverter output for the Power Supply. Inverters with an output frequency of 50/60 Hz are available, but the rise in the internal temperature of the Power Supply may result in ignition or burning.
✻2. For a cold start at 25°C. Refer to *Engineering Data* on page 18 for details.
✻3. If the output voltage adjuster (V. ADJ) is turned, the voltage will increase by more than +15% of the voltage adjustment range (by more than +10% for 240-W models with indication monitor). When adjusting the output voltage, confirm the actual output voltage from the Power Supply and be sure that the load is not damaged.
✻4. To reset the protection, turn OFF the input power for three minutes or longer and then turn it back ON.
✻5. Displayed on 7-segment LED. (character height: 8 mm)
✻6. Resolution of output voltage indication: 0.1 V, Precision of output voltage indication: ±2% (percentage of output voltage value, ±1 digit)
✻7. Resolution of output current indication: 0.1 A; Precision of output current indication: ±5% F.S. ±1 digit max. (specified by rated output voltage)
✻8. Resolution of peak-hold current indication: 0.1 A; Precision of peak-hold current indication: ±5% F.S. ±1 digit max. (specified by rated output voltage); Signal width required for peak-hold current: 20 ms
✻9. A Type and B Type: Sinking, AP Type and BP Type: Sourcing, BE Type: No alarm output.
✻10. S8VS-06024A, S8VS-09024A/AP, S8VS-12024A/AP, S8VS-18024A/AP, and S8VS-24024A/AP only
✻11. The range for compliance with EC Directives and safety standards (UL, EN, etc.) is 100 to 240 VAC (85 to 264 VAC).

Item		Power ratings / Type	120 W Standard	120 W Maintenance forecast monitor	120 W Total run time monitor	180 W Standard	180 W Maintenance forecast monitor	180 W Total run time monitor
Efficiency		With 100-VAC input	84% typical	83% typical		85% typical	85% typical	
		With 200-VAC input	87% typical	85% typical		88% typical	87% typical	
Input	Voltage ✻1		100 to 240 VAC (allowable range: 85 to 264 VAC or 80 to 370 VDC ✻11)					
	Frequency ✻1		50/60 Hz (47 to 63 Hz)					
	Current	With 100-VAC input	1.9 A max., 1.5 A typical			2.9 A max., 2.2 A typical		
		With 200-VAC input	1.1 A max., 0.71 A typical	1.1 A max., 0.72 A typical		1.6 A max., 1.1 A typical		
	Power factor		0.9 min.					
	Harmonic current regulation		Conforms to EN61000-3-2					
	Leakage current	With 100-VAC input	0.5 mA max.					
		With 200-VAC input	1.0 mA max.					
	Inrush current ✻2	With 100-VAC input	17.5 A max., 14 A typical					
		With 200-VAC input	35 A max., 28 A typical					
Output	Voltage adjustment range ✻3		−10% to 15% (with V.ADJ)					
	Ripple noise voltage (at rated I/O)		60 mV max.	130 mV max.		50 mV max.	180 mV max.	
	Input variation influence		0.5% max. (at 85- to 264-VAC input, 100% load)					
	Load variation influence (rated input voltage)		1.5% max. (with rated input, 0 to 100% load)					
	Temperature variation influence		0.05%/°C max.					
	Startup time (at rated I/O) ✻2	With 100-VAC input	550 ms typical	650 ms typical		570 ms typical	580 ms typical	
		With 200-VAC input	400 ms typical	520 ms typical		470 ms typical	490 ms typical	
	Output hold time (at rated I/O) ✻2	With 100-VAC input	52 ms typical	56 ms typical		58 ms typical	70 ms typical	
		With 200-VAC input	54 ms typical	56 ms typical		62 ms typical	70 ms typical	
Additional functions	Overload protection ✻2		105% to 160% of rated load current, inverted L voltage drop, automatic reset					
	Overvoltage protection ✻2, ✻4		Yes					
	Output voltage indication ✻5		No	Yes (selectable) ✻6		No	Yes (selectable) ✻6	
	Output current indication ✻5		No	Yes (selectable) ✻7		No	Yes (selectable) ✻7	
	Peak-hold current indication ✻5		No	Yes (selectable) ✻8		No	Yes (selectable) ✻8	
	Maintenance forecast monitor indication ✻5		No	Yes (selectable)	No	No	Yes (selectable)	No
	Maintenance forecast monitor output		No	Yes (transistor output), 30 VDC max., 50 mA max. ✻9	No	No	Yes (transistor output), 30 VDC max., 50 mA max. ✻9	No
	Total run time monitor indication ✻5		No		Yes (selectable)	No		Yes (selectable)
	Total run time monitor output ✻5		No		Yes (transistor output), 30 VDC max., 50 mA max. ✻9	No		Yes (transistor output), 30 VDC max., 50 mA max. ✻9
	Undervoltage alarm indication ✻5		No	Yes (selectable)		No	Yes (selectable)	
	Undervoltage alarm output terminals		No	Yes (transistor output), 30 VDC max., 50 mA max. ✻9		No	Yes (transistor output), 30 VDC max., 50 mA max. ✻9	
	Parallel operation		No (However, backup operation is possible. An external diode is required.)					
	Series operation		Yes for up to 2 Power Supplies (with external diode)					
Other	Operating ambient temperature		Refer to the derating curve in . (with no icing or condensation)					
	Storage temperature		−25 to 65°C					
	Operating ambient humidity		25% to 85% (Storage humidity: 25% to 90%)					
	Dielectric strength		3.0 kVAC for 1 min. (between all inputs and outputs/ alarm outputs; detection current: 20 mA) 2.0 kVAC for 1 min. (between all inputs and PE terminals; detection current: 20 mA) 1.0 kVAC for 1 min. (between all outputs/ alarm outputs and PE terminals; detection current for standard models: 30 mA, detection current for models with indication monitor: 20 mA 500 VAC for 1 min. (between all outputs and alarm outputs; detection current: 20 mA)					
	Insulation resistance		100 MΩ min. (between all outputs/ alarm outputs and all inputs/ PE terminals) at 500 VDC					
	Vibration resistance		10 to 55 Hz, 0.375-mm single amplitude for 2 h each in X, Y, and Z directions 10 to 150 Hz, 0.35-mm single amplitude (5 G max.) for 80 min each in X, Y, and Z directions					
	Shock resistance		150 m/s^2, 3 times each in ±X, ±Y, and ±Z directions					
	Output indicator		Yes (color: green)					
	EMI	Conducted Emissions	Models with indication monitor: Conforms to EN55011 Group1 Class A and based on FCC Class A, Conforms to EN55011 Group1 Class B ✻11 Standard models: Conforms to EN55011 Group1 Class B and based on FCC Class A					
		Radiated Emissions	Models with indication monitor: Conforms to EN55011 Group1 Class A, Conforms to EN55011 Group1 Class B ✻11 Standard models: Conforms to EN55011 Group1 Class B					
	EMS		Conforms to EN61204-3 high severity levels					
	Approved standards ✻11		UL 508 (Listing), UL 60950-1 (Recognition), CSA C22.2 No. 107.1 (cUL), CSA C22.2 No. 60950-1 (cUR), EN 50178 (= VDE 0160), EN 60950-1 (= VDE 0805 Teil 1) EAC mark, RCM mark, KOSHA S Mark ✻10					
	SEMI ✻11		F47-0706 (200-VAC input)					
	Weight		550 g max.			850 g max.		

Note: Refer to page 5 for notes 1 to 11.

Item		Power ratings / Type	240 W Standard	240 W Maintenance forecast monitor	240 W Total run time monitor	480 W Standard	480 W Maintenance forecast monitor	480 W Total run time monitor
Efficiency		With 100-VAC input	85% typical			89% typical		
		With 200-VAC input	88% typical			93% typical		
Input	Voltage ✻1		100 to 240 VAC (allowable range: 85 to 264 VAC or 80 to 370 VDC ✻11)			100 to 240 VAC (allowable range: 85 to 264 VAC)		
	Frequency ✻1		50/60 Hz (47 to 63 Hz)					
	Current	With 100-VAC input	3.8 A max., 2.9 A typical			7.4 A max., 5.8 A typical		
		With 200-VAC input	2.0 A max., 1.5 A typical			3.9 A max., 2.8 A typical		
	Power factor		0.9 min.			0.95 min.		
	Harmonic current regulation		Conforms to EN61000-3-2					
	Leakage current	With 100-VAC input	0.5 mA max.					
		With 200-VAC input	1.0 mA max.					
	Inrush current ✻2	With 100-VAC input	17.5 A max., 14 A typical					
		With 200-VAC input	35 A max., 28 A typical					
Output	Voltage adjustment range ✻3		−10% to 15% (with V.ADJ)			−10% to 15% (with V.ADJ)		
	Ripple noise voltage (at rated I/O)		140 mV max.	160 mV max.		310 mV max.		
	Input variation influence		0.5% max. (at 85- to 264-VAC input, 100% load)					
	Load variation influence (rated input voltage)		1.5% max. (with rated input, 0 to 100% load)					
	Temperature variation influence		0.05%/°C max.					
	Startup time (at rated I/O) ✻2	With 100-VAC input	540 ms typical	510 ms typical		550 ms typical		
		With 200-VAC input	230 ms typical	510 ms typical		550 ms typical		
	Output hold time (at rated I/O) ✻2	With 100-VAC input	64 ms typical	46 ms typical		37 ms typical		
		With 200-VAC input	64 ms typical	46 ms typical		41 ms typical		
Additional functions	Overload protection ✻2		105% to 160% of rated load current, inverted L voltage drop, automatic reset			151% to 160% of rated load current, inverted L voltage drop, intermittent, automatic reset		
	Overvoltage protection ✻2, ✻4		Yes					
	Output voltage indication ✻5		No	Yes (selectable) ✻6		No	Yes (selectable) ✻6	
	Output current indication ✻5		No	Yes (selectable) ✻7		No	Yes (selectable) ✻7	
	Peak-hold current indication ✻5		No	Yes (selectable) ✻8		No	Yes (selectable) ✻8	
	Maintenance forecast monitor indication ✻5		No	Yes (selectable)	No		Yes (selectable)	No
	Maintenance forecast monitor output		No	Yes (transistor output), 30 VDC max., 50 mA max. ✻9	No		Yes (transistor output), 30 VDC max., 50 mA max.	No
	Total run time monitor indication ✻5		No		Yes (selectable)	No		Yes (selectable)
	Total run time monitor output ✻5		No		Yes (transistor output), 30 VDC max., 50 mA max. ✻9	No		Yes (transistor output), 30 VDC max., 50 mA max. ✻9
	Undervoltage alarm indication ✻5		No	Yes (selectable)		No	Yes (selectable)	
	Undervoltage alarm output terminals		No	Yes (transistor output), 30 VDC max., 50 mA max. ✻9		No	Yes (transistor output), 30 VDC max., 50 mA max. ✻9	
	Parallel operation		No (However, backup operation is possible. An external diode is required.)					
	Series operation		Yes for up to 2 Power Supplies (with external diode)					
Other	Operating ambient temperature		Refer to the derating curve in . (with no icing or condensation)					
	Storage temperature		−25 to 65°C					
	Operating ambient humidity		25% to 85% (Storage humidity: 25% to 90%)					
	Dielectric strength		3.0 kVAC for 1 min. (between all inputs and outputs/alarm outputs; detection current: 20 mA) 2.0 kVAC for 1 min. (between all inputs and PE terminals; detection current: 20 mA) 1.0 kVAC for 1 min. (between all outputs/ alarm outputs and PE terminals; detection current for standard 240-W and 480-W models: 30 mA, detection current for 240-W models with indication monitor: 20 mA) 500 VAC for 1 min. (between all outputs and alarm outputs; detection current: 20 mA)					
	Insulation resistance		100 MΩ min. (between all outputs/ alarm outputs and all inputs/ PE terminals) at 500 VDC					
	Vibration resistance		10 to 55 Hz, 0.375-mm single amplitude for 2 h each in X, Y, and Z directions 10 to 150 Hz, 0.35-mm single amplitude (5 G max.) for 80 min each in X, Y, and Z directions: 240 W 10 to 150 Hz, 0.35-mm single amplitude (3 G max.) for 80 min each in X, Y, and Z directions: 480 W					
	Shock resistance		150 m/s², 3 times each in ±X, ±Y, and ±Z directions					
	Output indicator		Yes (color: green)					
	EMI	Conducted Emissions	Models with indication monitor: Conforms to EN55011 Group1 Class A and based on FCC Class A, Conforms to EN55011 Group1 Class B ✻11 Standard models: Conforms to EN55011 Group1 Class B and based on FCC Class A			Conforms to EN55011 Group1 Class A and based on FCC Class A Conforms to EN55011 Group1 Class B ✻11		
		Radiated Emissions	Models with indication monitor: Conforms to EN55011 Group1 Class A, Conforms to EN55011 Group1 Class B ✻11 Standard models: Conforms to EN55011 Group1 Class B			Conforms to EN55011 Group1 Class A Conforms to EN55011 Group1 Class B ✻11		
	EMS		Conforms to EN61204-3 high severity levels					
	Approved standards ✻11		UL 508 (Listing), UL 60950-1 (Recognition), CSA C22.2 No.107.1 (cUL), CSA C22.2 No. 60950-1 (cUR), EN 50178 (=VDE 0160), EN 60950-1 (=VDE 0805 Teil 1) EAC mark, RCM mark, KOSHA S Mark ✻10			UL 508 (Listing) UL 60950-1 (Recognition) UL 62368-1 (Recognition) CSA C22.2 No.107.1 (cUL) CSA C22.2 No. 60950-1 (cUR), No. 62368-1 (cUR) EN 50178 (=VDE 0160), EN 60950-1 (=VDE 0805 Teil 1) EAC mark, RCM mark, KOSHA S Mark ✻10		
	SEMI ✻11		F47-0706 (200-VAC input)					
	Weight		1,150 g max.			1,700 g max.		

Note: Refer to page 5 for notes 1 to 11.

Connections

Block Diagrams

S8VS-015□□ (15 W)

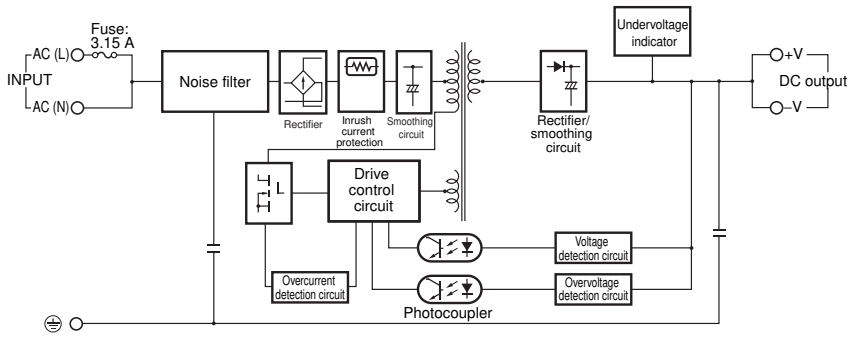

S8VS-030□□ (30 W)

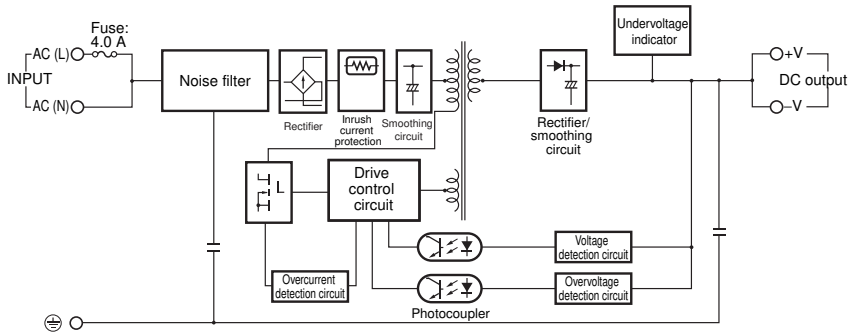

S8VS-06024A-□ (60 W)
S8VS-06024B-□ (60 W)

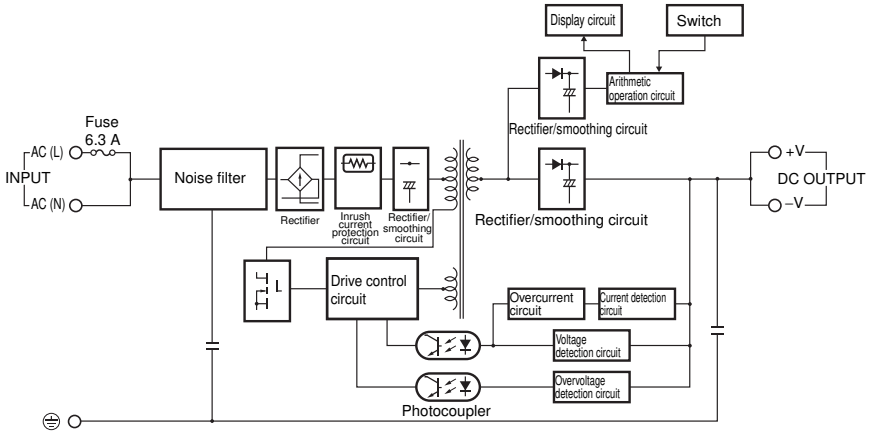

S8VS-06024-□ (60 W)

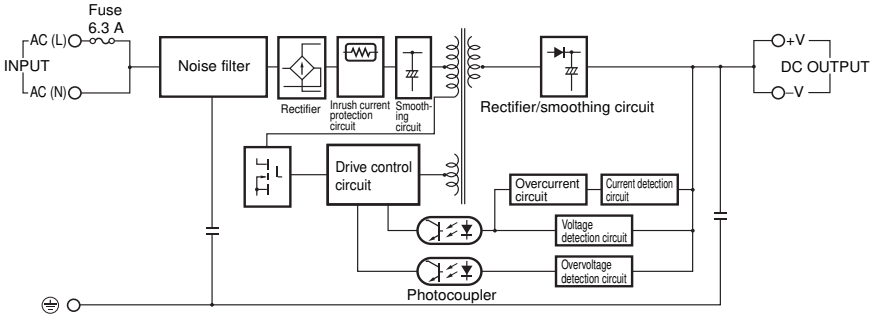

S8VS-09024A□-□ (90 W)
S8VS-09024B□-□ (90 W)
S8VS-09024BE-□ (90 W)
S8VS-09024A□S-□ (90 W)
S8VS-09024B□S-□ (90 W)
S8VS-09024BES-□ (90 W)

Sinking type
(S8VS-09024A-□, S8VS-09024B-□,
S8VS-09024AS-□, S8VS-09024BS-□)
Sourcing type
(S8VS-09024AP-□, S8VS-09024BP-□,
S8VS-09024APS-□, S8VS-09024BPS-□)

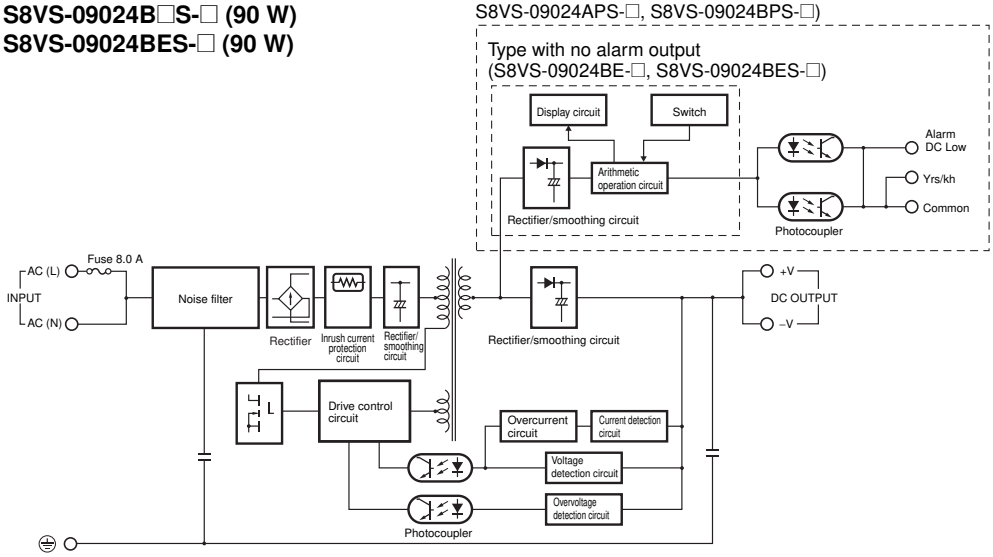

S8VS-09024-□ (90 W)
S8VS-09024S-□ (90 W)

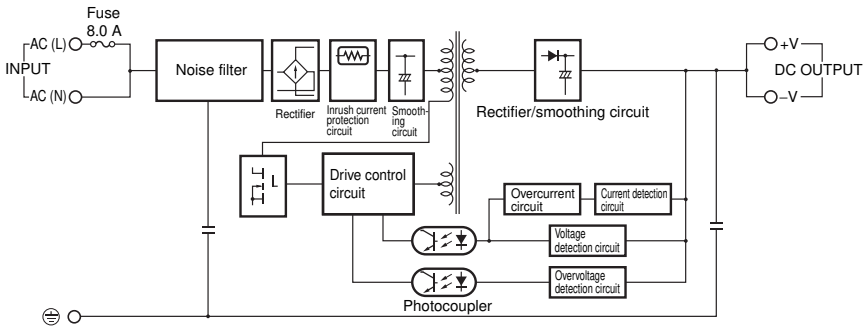

S8VS-12024A□-□ (120 W)
S8VS-12024B□-□ (120 W)
S8VS-12024BE-□ (120 W)

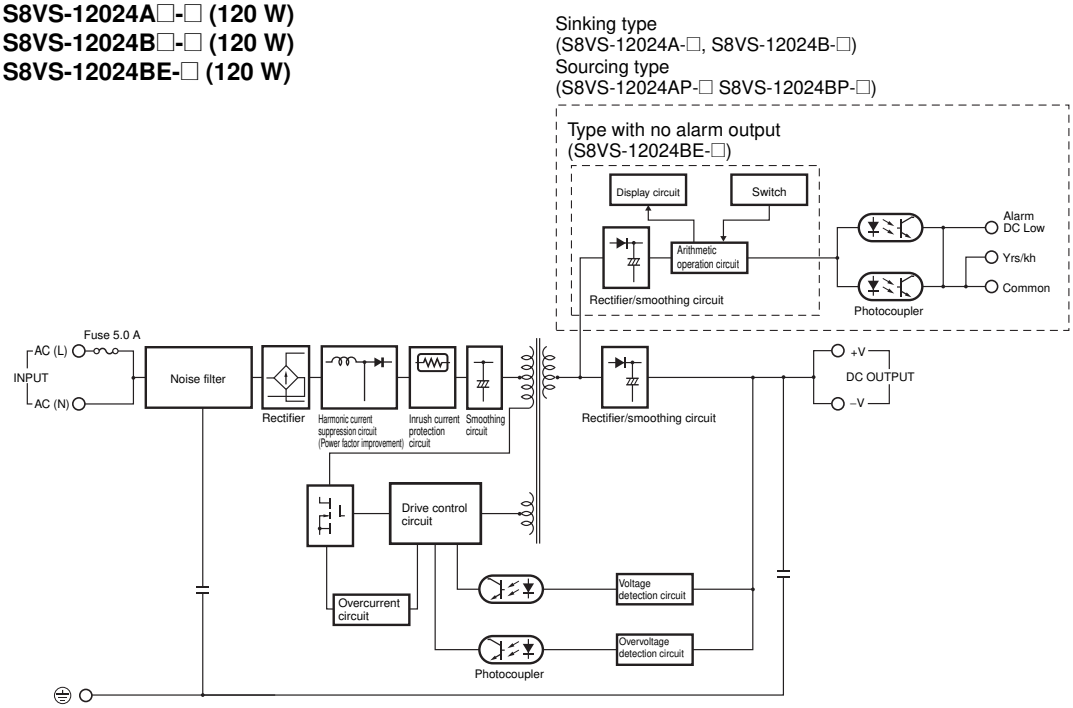

S8VS-12024-□ (120 W)

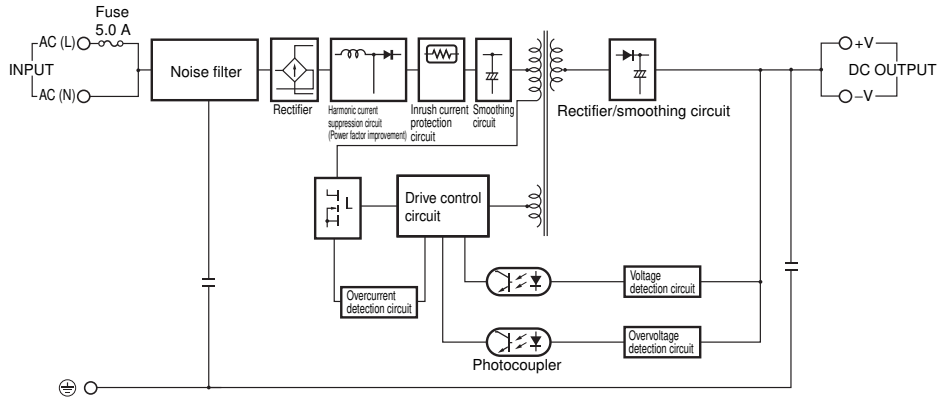

S8VS-18024A□-□ (180 W)
S8VS-18024B□-□ (180 W)
S8VS-18024BE-□ (180 W)

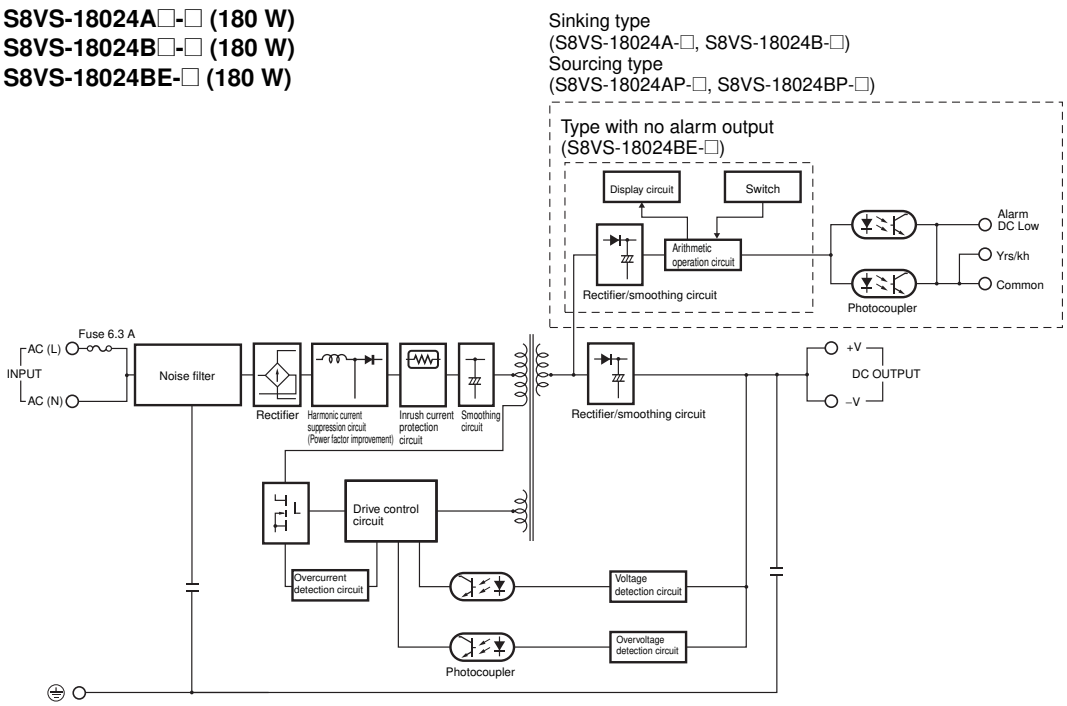

S8VS-18024-□ (180 W)

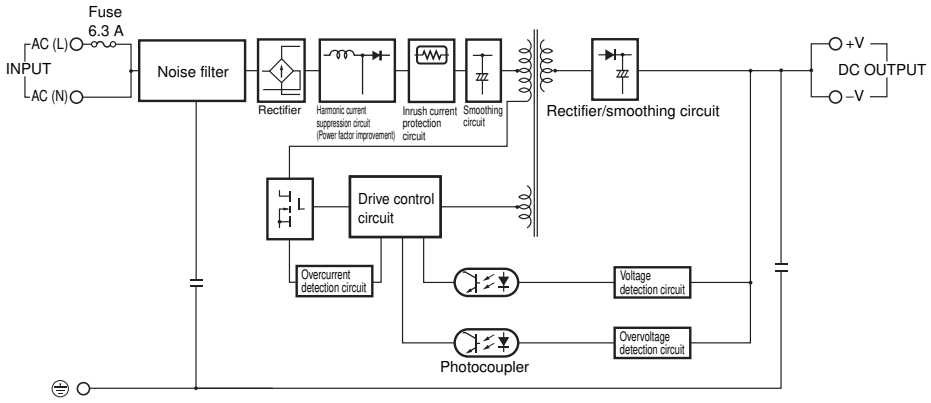

S8VS-24024A□-□ (240 W)
S8VS-24024B□-□ (240 W)
S8VS-24024BE-□ (240 W)

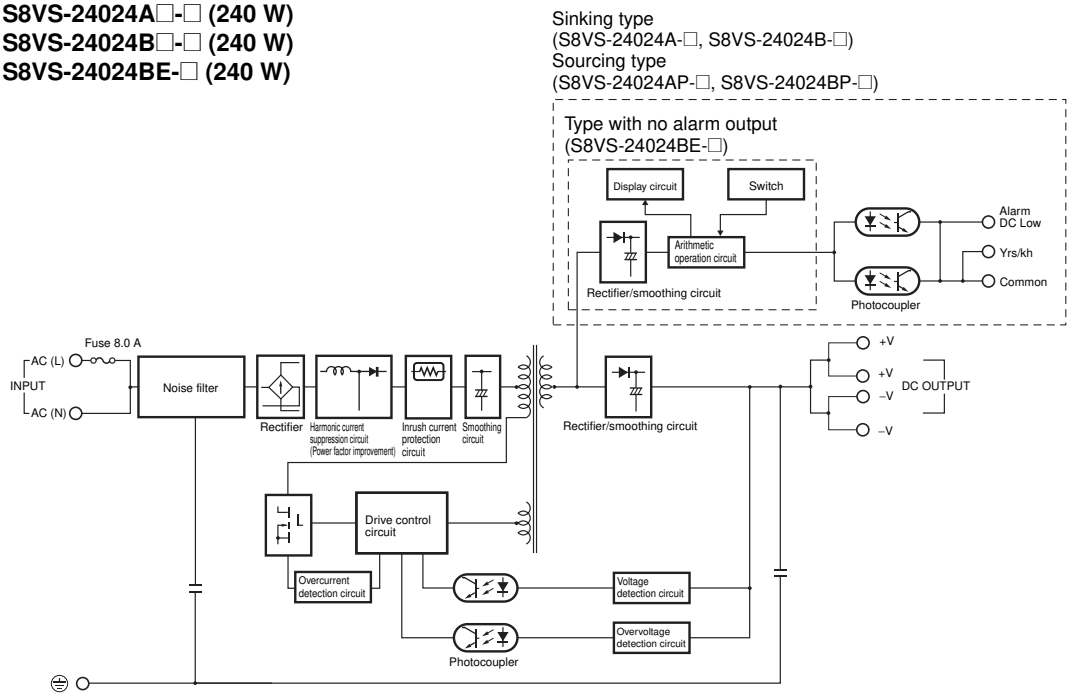

S8VS-24024-□ (240 W)

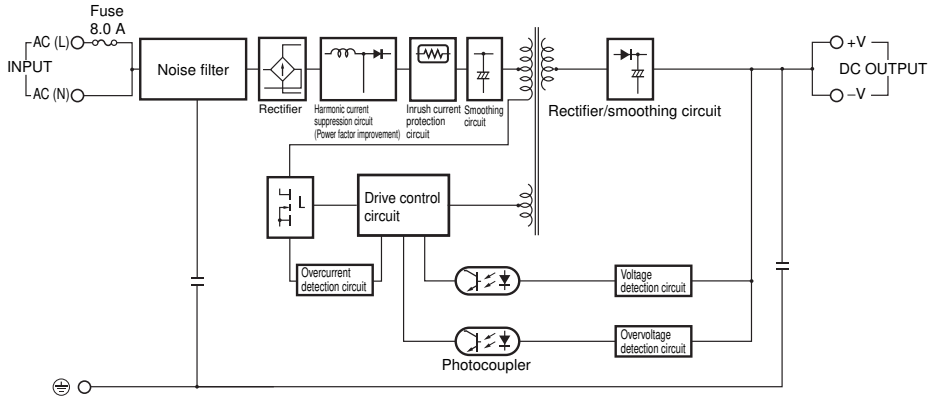

S8VS-48024-□ (480 W)
S8VS-48024A-□ (480 W)
S8VS-48024B-□ (480 W)

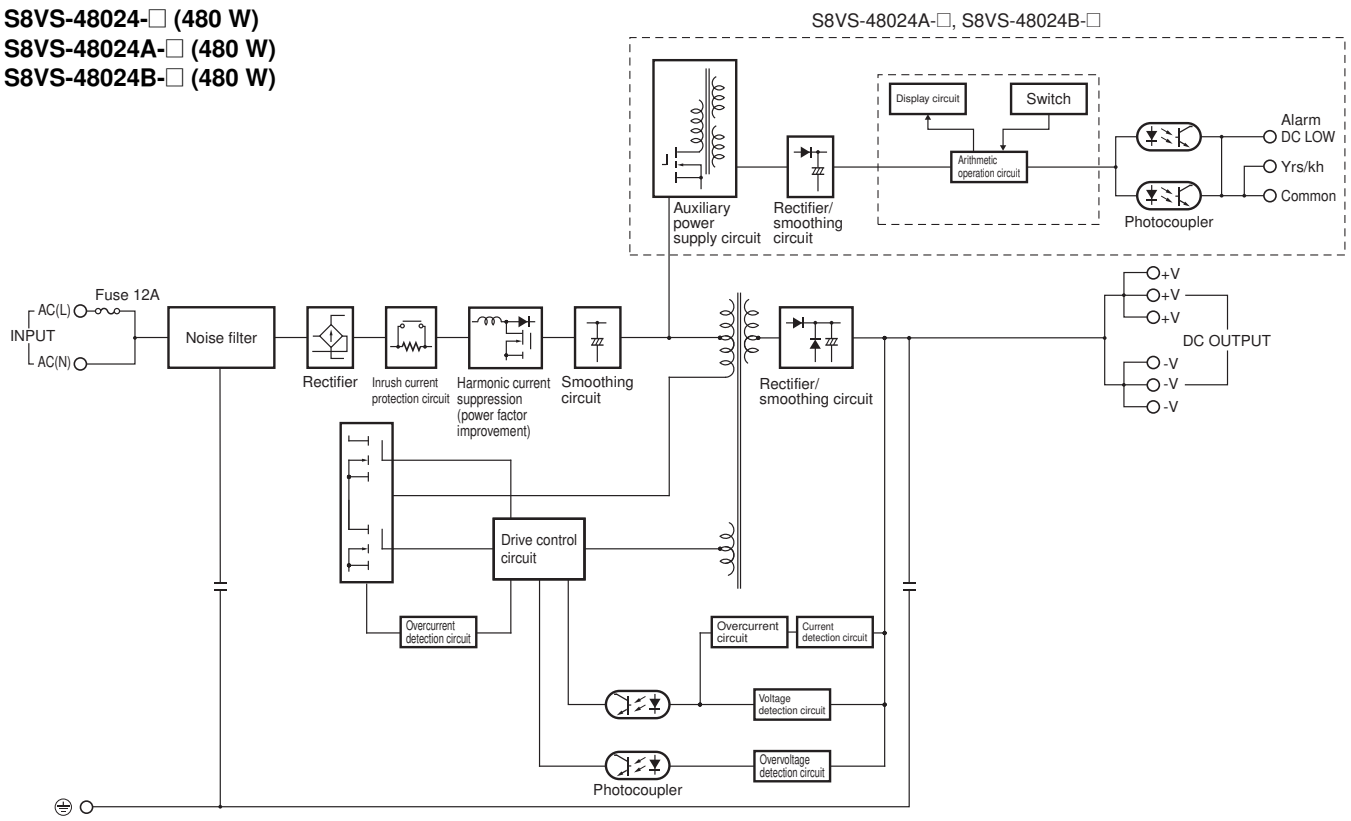

Alarm Output Connections

90, 120, 180, and 240 W (Sinking type)

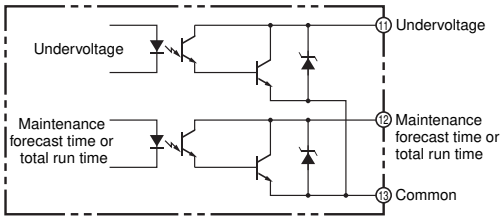

90, 120, 180, and 240 W (Sourcing type)

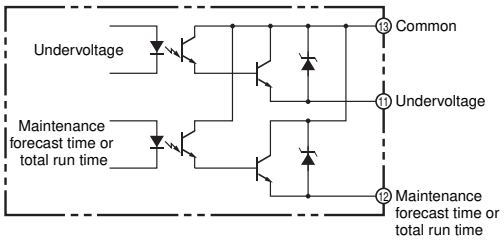

480 W

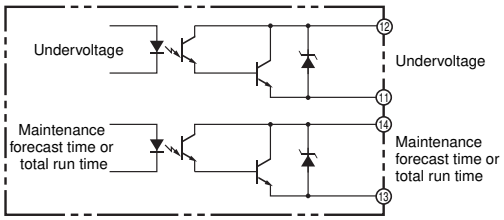

Construction and Nomenclature

Nomenclature

15-W, 30-W Models

S8VS-015□□/S8VS-030□□

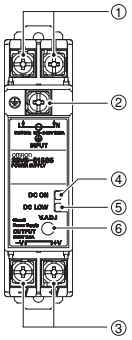

No.	Name	Function
1	Input terminals (L), (N)	Connect the input lines to these terminals. *1
2	Protective Earth terminal (PE)	Connect the ground line to this terminal. *2
3	DC Output terminals (−V), (+V)	Connect the load lines to these terminals.
4	Output indicator (DC ON: Green)	Lights while a direct current (DC) output is ON.
5	Undervoltage indicator (DC LOW: Red)	Lights when a drop is detected in the output voltage.
6	Output voltage adjuster (V.ADJ)	Use to adjust the voltage.

***1.** The fuse is located on the (L) side. For a DC input, connect the positive voltage to the L terminal.
***2.** This is the protective earth terminal specified in the safety standards. Always ground this terminal.

Note: The S8VS-01505 is shown above.

Nomenclature

60-W Models

Standard Model
S8VS-06024

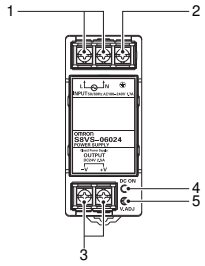

Models with Indication Monitor
S8VS-06024□

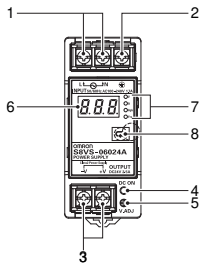

Note: The S8VS-06024A is shown above.

90-W/120-W Models

Standard Models
S8VS-09024/S8VS-0924S/
S8VS-12024

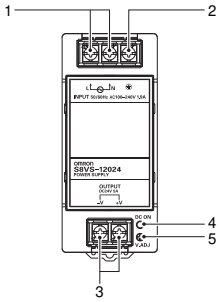

Models with Indication Monitor
S8VS-09024□□□/
S8VS-09024□□□S/S8VS-12024□□□

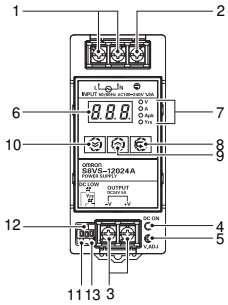

Note: The S8VS-12024A is shown above.

180-W Models

Standard Model
S8VS-18024

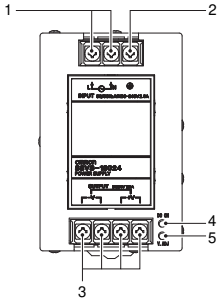

Models with Indication Monitor
S8VS-18024□□□

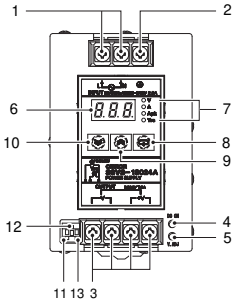

Note: The S8VS-18024A is shown above.

240-W Models

Standard Model
S8VS-24024

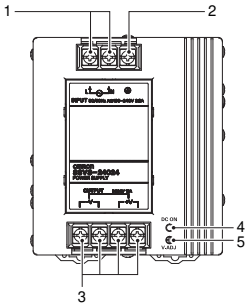

Models with Indication Monitor
S8VS-24024□□□

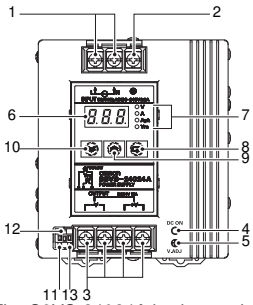

Note: The S8VS-24024A is shown above.

* The terminal arrangement is the same for models with screwless terminal blocks and standard models.

No.	Name		Function
1	Input terminals (L), (N)		Connect the input lines to these terminals. *1
2	Protective Earth terminal (PE)		Connect the ground line to this terminal. *2
3	DC Output terminals (–V), (+V)		Connect the load lines to these terminals.
4	Output indicator (DC ON: Green)		Lights while a direct current (DC) output is ON.
5	Output voltage adjuster (V.ADJ)		Use to adjust the voltage. *3
6	Main display (Red) *4		Indicates the measurement or set value.
7	Operation indicator (Orange) *4	V	Lights up when the output voltage is indicated. Blinks during setup of undervoltage alarm value.
		A	Lights up during indication of output current.
		Apk	Lights up during indication of peak hold current.
		Yrs	Lights up during indication of maintenance forecast monitor. Blinks during setup of maintenance forecast monitor setting. (S8VS-□□□24A□□)
		kh	Lights up during indication of total run time monitor. Blinks during setup of total run time monitor. (S8VS-□□□24B□□)
8	Mode Key *4		Use the Mode Key to change the indicated parameter or reset the peak hold current value.
9	Up Key *5		Use the Up Key to change to the setting mode or to increase the set value.
10	Down Key *5		Use the Down Key to change to the setting mode or to decrease the set value.
11	Alarm outputs *5, *6	Undervoltage output terminal (DC Low)	Output when a drop is detected in the output voltage (voltage drop = transistor OFF).
12		Maintenance Forecast output terminal (Yrs) *7	Output when the set value for maintenance is reached (transistor OFF).
		Total run time output terminal (kh) *8	Output when the set value for total run time is reached (transistor OFF).
13		Common terminal	Common terminal for terminals 11 and 12.

***1.** The fuse is located on the (L) side. For a DC input, connect the positive voltage to the L terminal.
***2.** This is the protective earth terminal specified in the safety standards. Always ground this terminal.
***3.** The output voltage cannot be adjusted for the S8VS-09024□□□S.
***4.** S8VS-□□□24A□□/B□□/BE□ only.
***5.** S8VS-□□□24A□□/B□□ only (except the S8VS-06024□).
***6.** Both sinking and sourcing outputs are available.
***7.** S8VS-□□□24A□□ only (excluding S8VS-06024A).
***8.** S8VS-□□□24B□□ only (excluding S8VS-06024B).

480-W Models

Standard Model

S8VS-48024

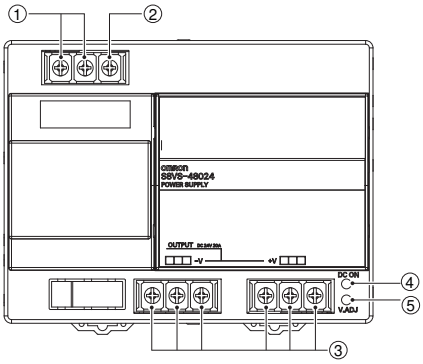

Models with Indication Monitor

S8VS-48024□

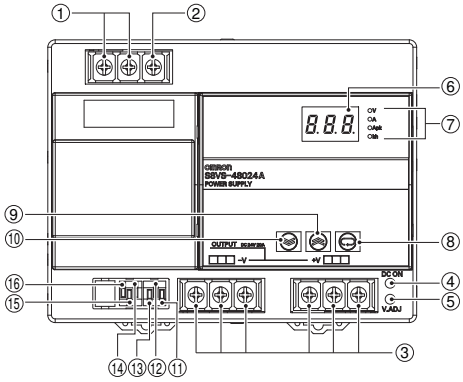

Note: The illustration shows the S8VS-48024A model.

* The terminal arrangement is the same for models with screwless terminal blocks and standard models.

No.	Name		Function
1	AC Input terminals (L), (N)		Connect the input lines to these terminals. *1
2	Protective Earth terminal (PE)		Connect the ground line to this terminal. *2
3	DC Output terminals (–V), (+V)		Connect the load lines to these terminals.
4	Output indicator (DC ON: Green)		Lights while a direct current (DC) output is ON.
5	Output voltage adjuster (V.ADJ)		Use to adjust the voltage.
6	Main display (Red) *3		Indicates the measurement or set value.
7	Operation indicator (Orange) *3	V	Lights up when the output voltage is indicated. Blinks during setup of undervoltage alarm value.
		A	Lights up during indication of output current.
		Apk	Lights up during indication of peak hold current.
		Yrs	Lights up during indication of maintenance forecast monitor. Blinks during setup of maintenance forecast monitor setting. (S8VS-48024A)
		kh	Lights up during indication of total run time monitor. Blinks during setup of total run time monitor. (S8VS-48024B)
8	Mode Key *3		Use the Mode Key to change the indicated parameter or reset the peak hold current value.
9	Up Key *3		Use the Up Key to change to the setting mode or to increase the set value.
10	Down Key *3		Use the Down Key to change to the setting mode or to decrease the set value.
11	Alarm outputs *3	Undervoltage output terminal (DC Low) (Emitter side)	Output when a drop is detected in the output voltage (voltage drop = transistor OFF).
12		Undervoltage output terminal (DC Low) (Collector side)	
13		Maintenance Forecast output terminal (Yrs) *4 (Emitter side)	Output when the set value for maintenance is reached (transistor OFF).
		Total run time output terminal (kh) *5 (Emitter side)	Output when the set value for total run time is reached (transistor OFF).
14		Maintenance Forecast output terminal (Yrs) *4 (Collector side)	Output when the set value for maintenance is reached (transistor OFF).
		Total run time output terminal (kh) *5 (Collector side)	Output when the set value for total run time is reached (transistor OFF).
15, 16	NC (Not connected)		

***1.** The fuse is located on the (L) side. It is NOT user replaceable.
***2.** This is the protective earth terminal specified in the safety standards. Always ground this terminal.
***3.** S8VS-48024A/B only.
***4.** S8VS-48024A only.
***5.** S8VS-48024B only.

Engineering Data

Derating Curve

15 W <S8VS-015□□>

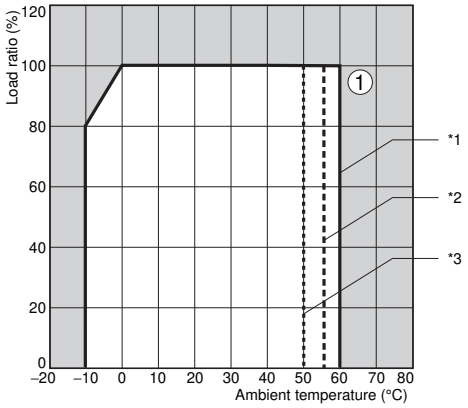

*1 Standard mounting
*2 Face-up mounting
*3 Horizontal mounting

30 W <S8VS-03005/S8VS-03012>

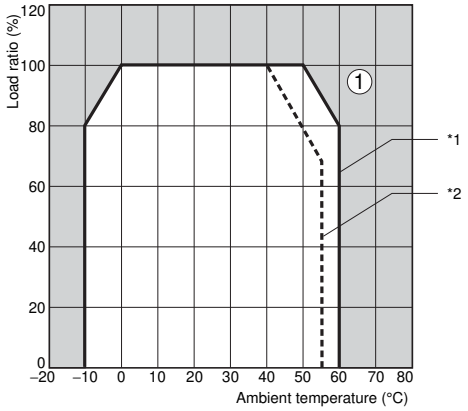

*1 Standard mounting
*2 Face-up mounting/Horizontal mounting

30 W <S8VS-03024>

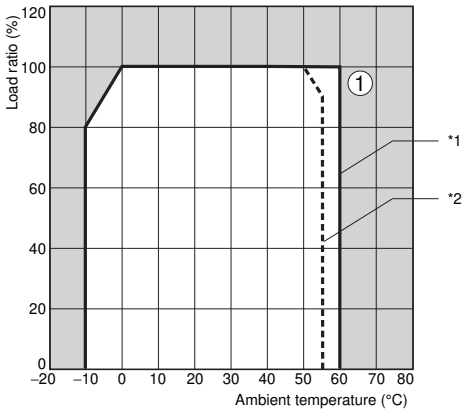

*1 Standard mounting
*2 Face-up mounting/Horizontal mounting

Note: 1. Internal parts may occasionally deteriorate or be damaged. Do not use the Power Supply in areas outside the derating curve (i.e., the area shown by shading A in the above graph).
2. If there is a derating problem, use forced air-cooling.
3. Provide a space of at least 20 mm when using standard mounting and horizontal mounting. If 20 mm is not available, make sure that the space is at least 10 mm. In this case, reduce the corresponding derating curve by 5°C.
4. DC Inputs
If the input voltage is less than 100 VDC, reduce the load given in the above derating curve by at least the following factor.
S8VS-03005: 0.7 max.
S8VS-03012/03024: 0.85 max.

60, 90, 120, 180, 240, and 480 W

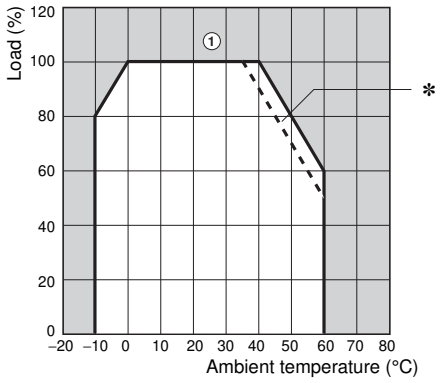

* Using side mounting bracket for right-side mounting (excluding 240-W models). UL certification conditions do not apply if the side mounting bracket is used.

Note: 1. Internal parts may occasionally deteriorate or be damaged. Do not use the Power Supply in areas outside the derating curve (i.e., the area shown by shading A in the above graph).
2. If there is a derating problem, use forced air-cooling.
3. When using a 480-W model at an input voltage of 95 VAC or less, derate the load by at least 80%.
4. DC Inputs
If the input voltage is less than 100 VDC, reduce the load given in the above derating curve by at least the following factor.
60-W models: 0.9 max.
90-W models: 0.85 max.
120-W/180-W/240-W models: 0.8 max.

Mounting

15 and 30 W

Standard mounting with DIN rail

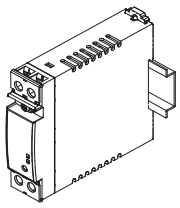

Face-up mounting with DIN rail

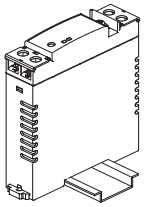

Standard mounting with S82Y-VS30P

Face-up mounting with S82Y-VS30P

Note: The Side-mounting Bracket can be mounted from either side.

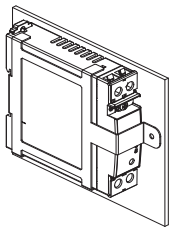

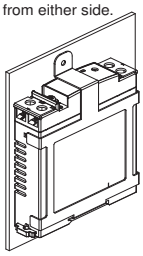

Horizontal mounting with S82Y-VS30P*

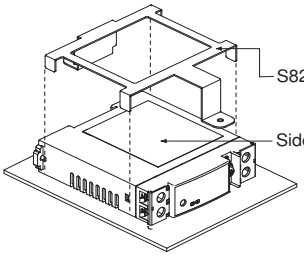

Note: 1. Improper mounting will interfere with heat dissipation and may occasionally result in deterioration or damage of internal parts. Use the Product within the derating curve for the mounting direction that is used. Do not use the Power Supply mounted in any way not shown above.

2. Use a mounting bracket (S82Y-VS30P, sold separately) when the Product is mounted horizontally.

3. Heat dissipation will be adversely affected. When the Product is mounted facing horizontally, always place the side with the label facing horizontally.

4. Use PFP-M End Plates on the top and bottom of the Power Supply when mounting horizontally on a DIN rail.

60, 90, 120, 180, 240, and 480 W

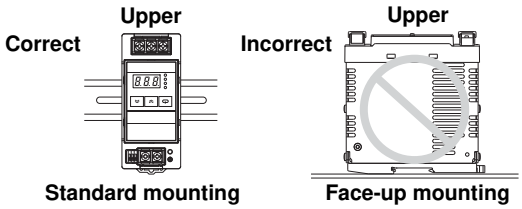

Note: Improper mounting will interfere with heat dissipation and may occasionally result in deterioration or damage of internal parts. It may also result in failure of the maintenance forecast monitor function. Use the standard mounting method only.

Overload Protection

The load and the power supply are automatically protected from overcurrent damage by this function. Overload protection is activated if the output current rises above 105% (151% with S8VS-48024□) of the rated current.

When the output current returns within the rated range overload protection is automatically cleared.

15-W/30-W Models

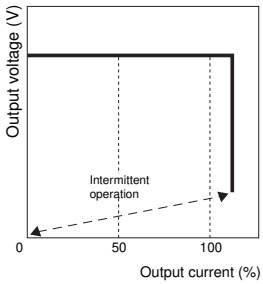

60-W/90-W Models

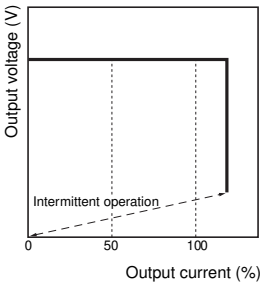

The values shown in the above diagrams are for reference only.

120-W/180-W/240-W Models

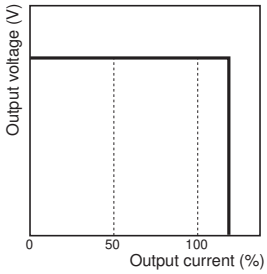

480-W Models

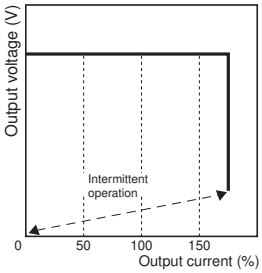

The values shown in the above diagrams are for reference only.

Note: 1. Internal parts may occasionally deteriorate or be damaged if a short-circuited or overcurrent state continues during operation.

2. Internal parts may possibly deteriorate or be damaged if the Power Supply is used for applications with frequent inrush current or overloading at the load end. Do not use the Power Supply for such applications.

Peak Output Current (S8VS-48024□ only)

The boost current is a temporary current that exceeds the rated current. However, it should meet the following four boost current conditions.

- Time that the boost current flows: t1 ≤ 10 s
- The boost current: Ip ≤ Maximum boost current
- The average output current: Iave ≤ Rated output current
- The time ratio of the boost current flow: Duty ≤ 30%

$$\text{Duty} = \frac{t1}{t1 + t2} \times 100\ [\%] \leq 30\%$$

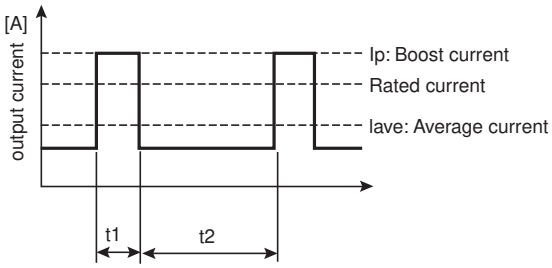

- Do not allow a boost current to flow for more than 10 s. Do not allow the duty to exceed 30%. These conditions may damage the Power Supply.
- Do not allow the average current for one cycle of the boost current to exceed the rated current. The Power Supply may be damaged.
- Derate the boost current and the average output current loads according to the ambient operating temperature and mounting direction.

Overvoltage Protection

Consider the possibility of an overvoltage and design the system so that the load will not be subjected to an excessive voltage even if the feedback circuit in the Power Supply fails. If an excessive voltage that is approximately 130% of the rated voltage (but approximately 110% of the rated voltage for the S8VS-09024□□□S) or more is output, the output voltage is shut OFF. Reset the input power by turning it OFF for at least three minutes and then turning it back ON again.

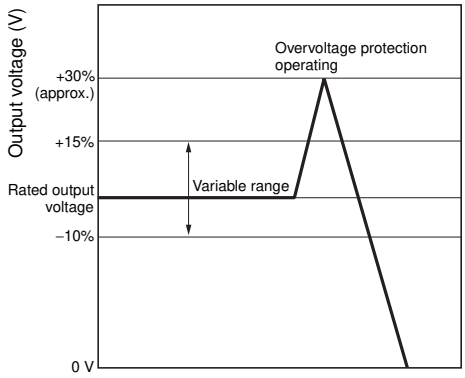

The values shown in the above diagram is for reference only.

Note: Do not turn ON the power again until the cause of the overvoltage has been removed.

Inrush Current, Startup Time, Output Hold Time

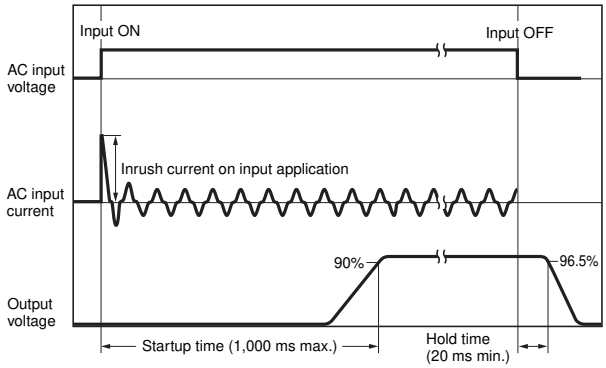

Undervoltage Alarm Indication

LED (DC LOW: red) lights to warn of output voltage drop.
Detection voltage is set to approx. 80% (75 to 90%) of the rated output voltage.

Note: This function monitors the voltage at the power supply output terminals. To check actual voltage, measure voltage on the load side.

Undervoltage Alarm Function (Indication and Output) (S8VS-□□□24A□□/S8VS-□□□24B□□/ S8VS-□□□24BE□ Only)

When output voltage drop is detected, an alarm (A01) and lowest output voltage value are indicated alternately. (A01 can not be displayed when the output voltage drops below 18.0 V.) The preset value of detection voltage can be changed in the setting mode. (From 18.5 to 27.5 V in 0.1-V steps. The value is fixed at 20.0 V for the S8VS-06024A/S8VS-06024B.)
Further, an output (undervoltage output terminal (DC LOW)) to an external device is given from the transistor to notify of the error (excluding S8VS-06024A/S8VS-06024B/S8VS-□□□24BE□).
(Output voltage drop = OFF, i.e., no continuity at the undervoltage output terminal (DC LOW).)
Example: Outputting an Alarm When the Voltage Output by the S8VS-09024A□□ Drops to the Set Value (19.0 V) or Lower

In the case that the output voltage drops below the set value (19.0 V) and an alarm is issued

Note: 1. Operation begins after about three seconds since the AC power is supplied.
2. The alarm is not indicated in the setting mode.
3. Press the (Mode Key (8)) after the output voltage is restored, to reset alarm indication.
4. The undervoltage alarm function may also operate when an interruption in AC input is not restored within 20 ms.
5. The undervoltage alarm function monitors the output terminal voltage of the Power Supply. To check the voltage accurately, measure the voltage at the load end.

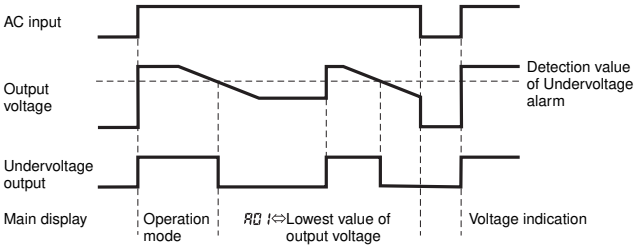

Note: Operation begins after about three seconds since the AC power is supplied.

Dimensions

Power Supplies with Screw Terminal Blocks

Note: All units are in millimeters unless otherwise indicated.

S8VS-015□□ (15 W)
S8VS-030□□ (30 W)

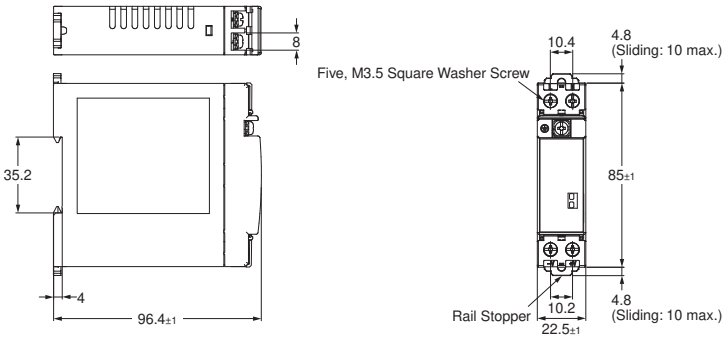

Note: The illustration is the S8VS-03024 model.

S8VS-06024 (60 W)
S8VS-06024A (60 W)
S8VS-06024B (60 W)

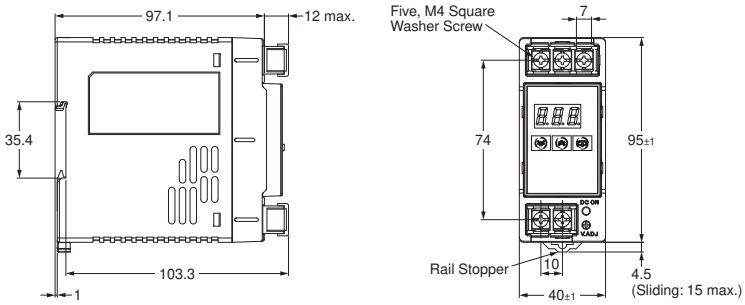

Note: The illustration is the S8VS-06024A model.

S8VS-09024 (90 W) /S8VS-09024S (90 W) /S8VS-12024 (120 W)
S8VS-09024A□ (90 W) /S8VS-09024A□S (90 W) /S8VS-12024A□ (120 W)
S8VS-09024B□ (90 W) /S8VS-09024B□S (90 W) /S8VS-12024B□ (120 W)
S8VS-09024BE (90 W) /S8VS-09024BES (90 W) /S8VS-12024BE (120 W)

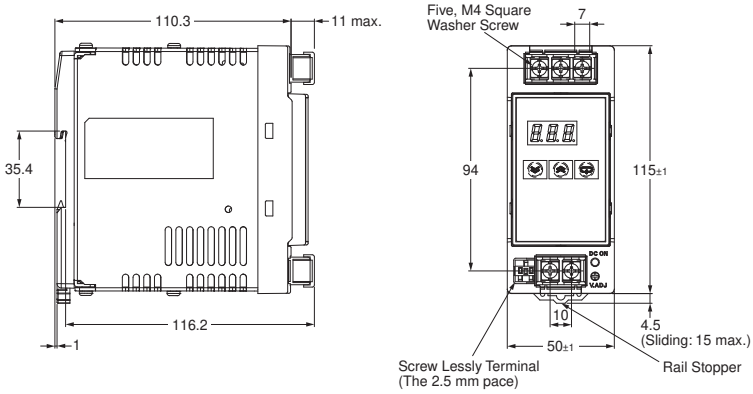

Note: The illustration is the S8VS-12024A model.

S8VS-18024 (180 W)
S8VS-18024A□ (180 W)
S8VS-18024B□ (180 W)
S8VS-18024BE (180 W)

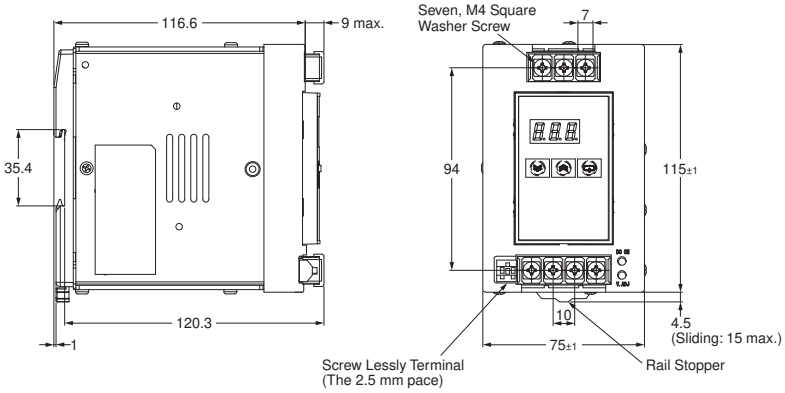

Note: The illustration is the S8VS-18024A model.

S8VS-24024 (240 W)
S8VS-24024A□ (240 W)
S8VS-24024B□ (240 W)
S8VS-24024BE (240 W)

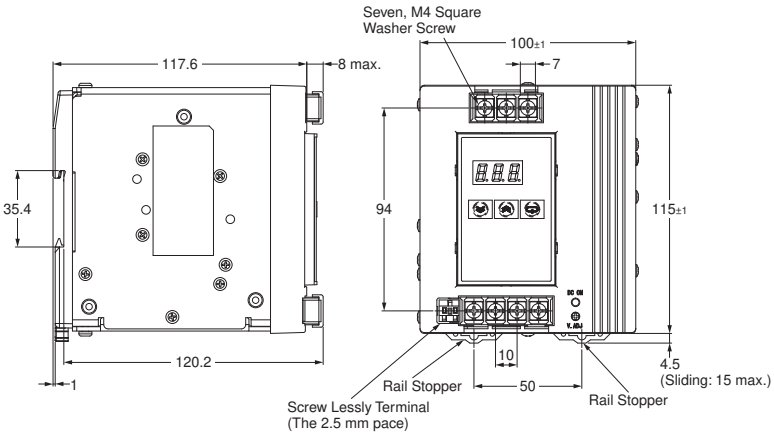

Note: The illustration shows the S8VS-24024A model.

S8VS-48024 (480 W)
S8VS-48024A (480 W)
S8VS-48024B (480 W)

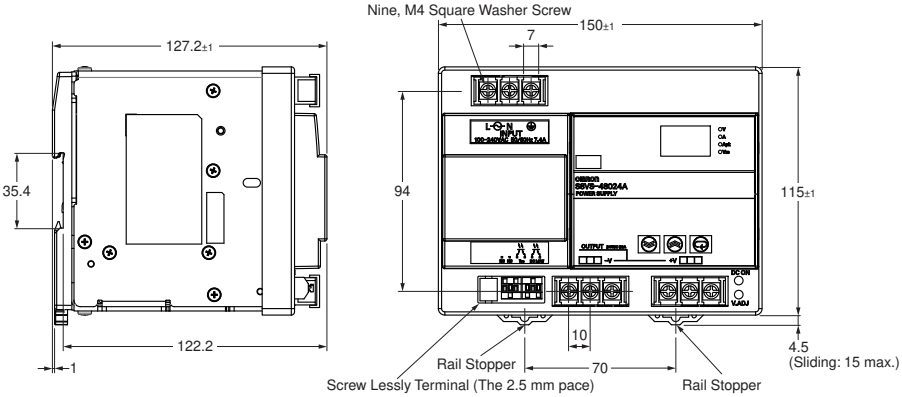

Note: The illustration shows the S8VS-48024A model.

Power Supplies with Screwless Terminal Blocks

S8VS-06024-F (60 W)
S8VS-06024A-F (60 W)
S8VS-06024B-F (60 W)

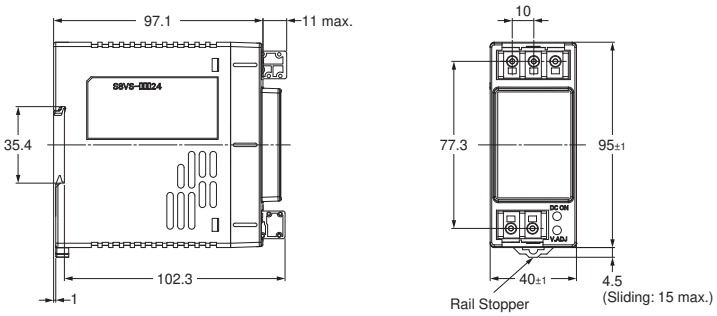

Note: The illustration shows the S8VS-06024-F model.

S8VS-09024-F (90 W) /S8VS-09024S-F (90 W) /S8VS-12024-F (120 W)
S8VS-09024A□-F (90 W) /S8VS-09024A□S-F (90 W) /S8VS-12024A□-F (120 W)
S8VS-09024B□-F (90 W) /S8VS-09024B□S-F (90 W) /S8VS-12024B□-F (120 W)
S8VS-09024BE-F (90 W) /S8VS-09024BES-F (90 W) /S8VS-12024BE-F (120 W)

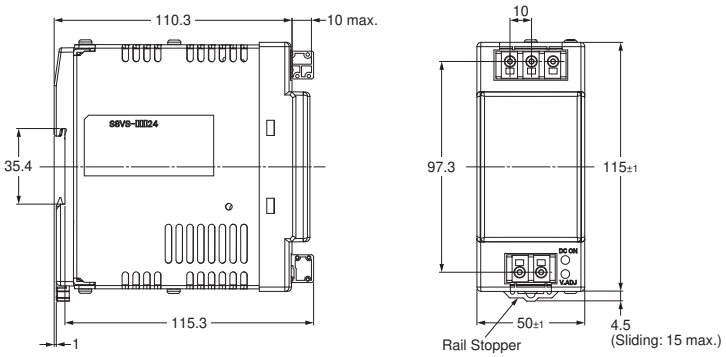

Note: The illustration shows the S8VS-12024-F model.

S8VS-18024-F (180 W)
S8VS-18024A□-F (180 W)
S8VS-18024B□-F (180 W)
S8VS-18024BE-F (180 W)

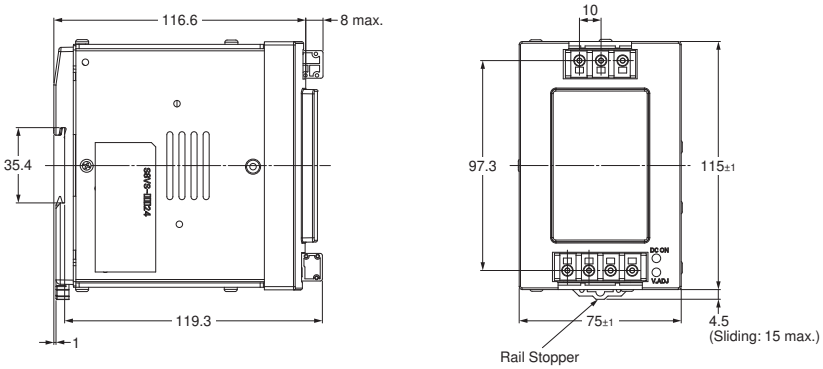

Note: The illustration shows the S8VS-18024-F model.

S8VS-24024-F (240 W)
S8VS-24024A□-F (240 W)
S8VS-24024B□-F (240 W)
S8VS-24024BE-F (240 W)

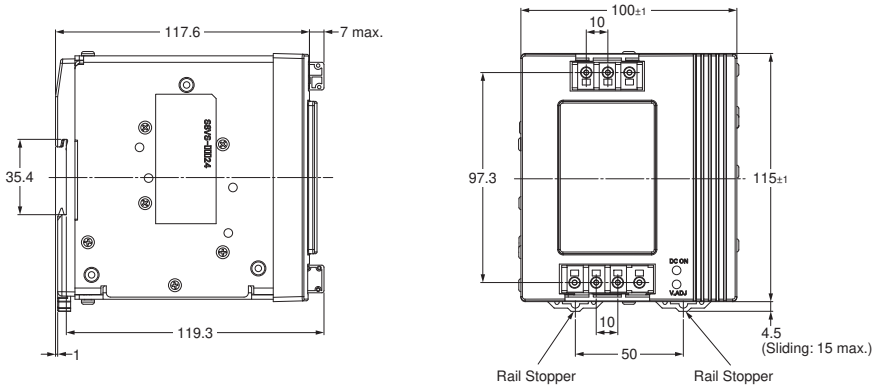

Note: The illustration shows the S8VS-24024-F model.

S8VS-48024-F (480 W)
S8VS-48024A-F (480 W)
S8VS-48024B-F (480 W)

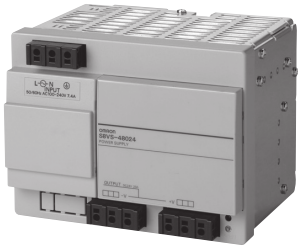

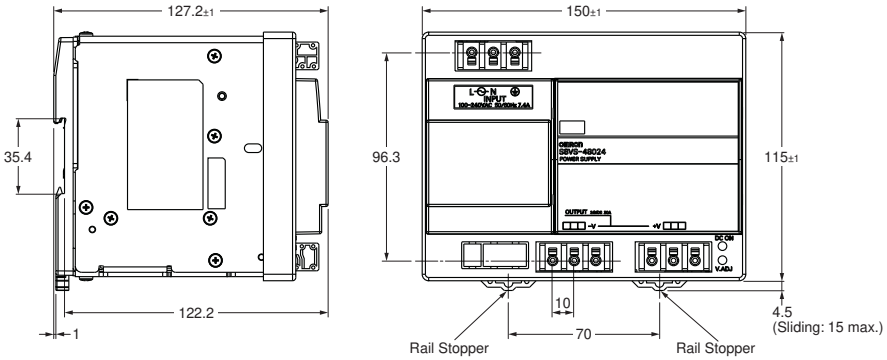

Note: The illustration shows the S8VS-48024-F model.

DIN Rail (Order Separately)

Note: All units are in millimeters unless otherwise indicated.

Mounting Rail (Material: Aluminum)

PFP-100N
PFP-50N

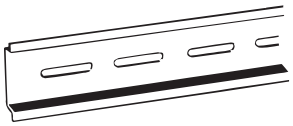

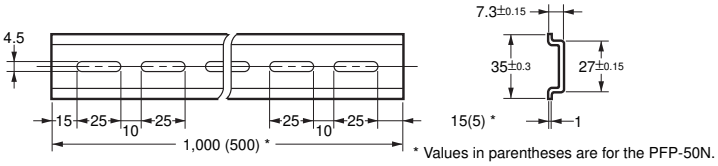

* Values in parentheses are for the PFP-50N.

Mounting Rail (Material: Aluminum)

PFP-100N2

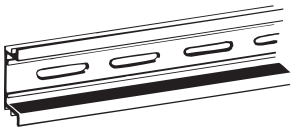

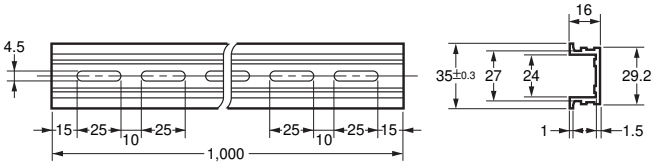

End Plate

PFP-M

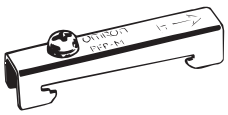

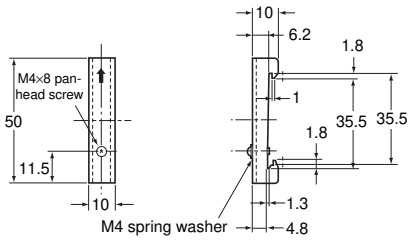

Note: If there is a possibility that the Unit will be subject to vibration or shock, use a steel DIN Rail. Otherwise, metallic filings may result from aluminum abrasion.

Terminal Block Cover (Order Separately)

S8VS	Input side	Output side
15W	**S82Y-VS-C2P-S**	
30W	**S82Y-VS-C2P-S**	
60W	**S82Y-VS-C3P**	**S82Y-VS-C2P-M**
90W	**S82Y-VS-C3P**	**S82Y-VS-C2P-M**
120W	**S82Y-VS-C3P**	**S82Y-VS-C2P-M**
180W	**S82Y-VS-C3P**	**S82Y-VS-C4P**
240W	**S82Y-VS-C3P**	**S82Y-VS-C4P**
480W	**S82Y-VS-C3P**	

Note: Terminal block cover attaches to the body. Please order from the loss time.

Mounting Brackets

Name	Model
Side-mounting Bracket (for 15- and 30-W models)	**S82Y-VS30P**
Side-mounting Bracket (for 60-, 90-, and 120-W models)	**S82Y-VS10S**
Side-mounting Bracket (for 180-W models)	**S82Y-VS15S**
Side-mounting Bracket (for 240-W models)	**S82Y-VS20S**
Front-mounting Bracket (for 60-, 90-, 120-, 180-, and 240-W models) *	**S82Y-VS10F**

Note: Brackets cannot be used for 480-W models.
* Two required to mount a 240-W model.

Type	Model	Dimensions	Appearance
Side-mounting Bracket (For 15-, 30-W models)	**S82Y-VS30P**	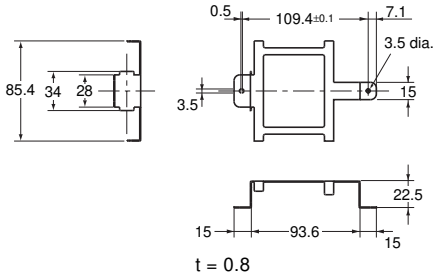	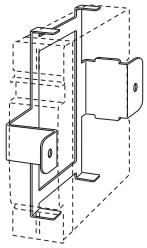
Side-mounting Bracket (For 60-, 90-, 120-W models)	**S82Y-VS10S**	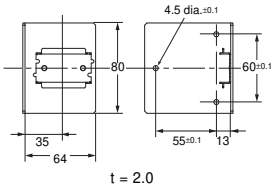	Left-side mounting Right-side mounting 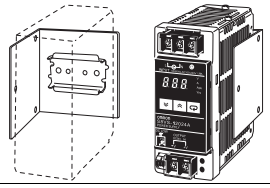
Side-mounting Bracket (For 180-W models)	**S82Y-VS15S**	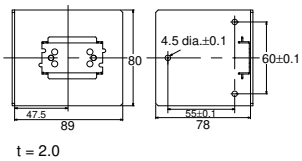	Left-side mounting 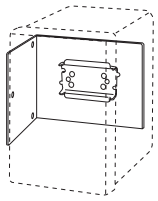 *Right-side mounting also possible.
Side-mounting Bracket (For 240-W models)	**S82Y-VS20S**	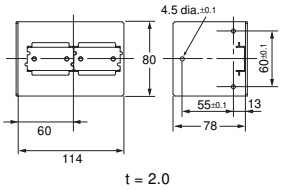	Left-side mounting 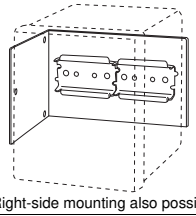 *Right-side mounting also possible.
Front-mounting Bracket (For 60-, 90-, 120-, 180-, and 240-W models)	**S82Y-VS10F**	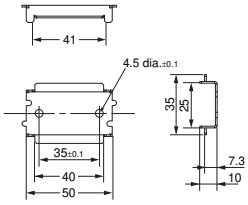	(For 60-, 90-, 120-, 180-W types) (For 240-W type) 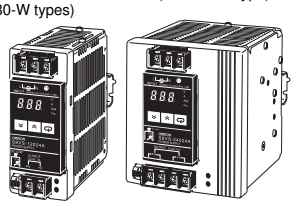 *Use two S82Y-VS10F brackets for the 240-W type.

Display and Alarm Output Functions and Operating Procedures

S8VS-□□□24A□□ models (with display monitor) can display the output voltage, output current, peak hold current, or maintenance forecast monitor time. S8VS-□□□24B□□/S8VS-□□□24B**E**□ models (with display monitor) can display the output voltage, output current, peak hold current, or total run time.

Mode Change

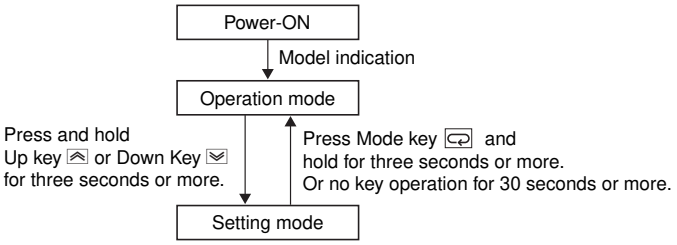

Note: No setting mode is provided for the S8VS-06024□.

Operation Mode

Various states of the Power Supply are indicated.

Models with Maintenance Forecast Monitor (S8VS-□□□24A□□)

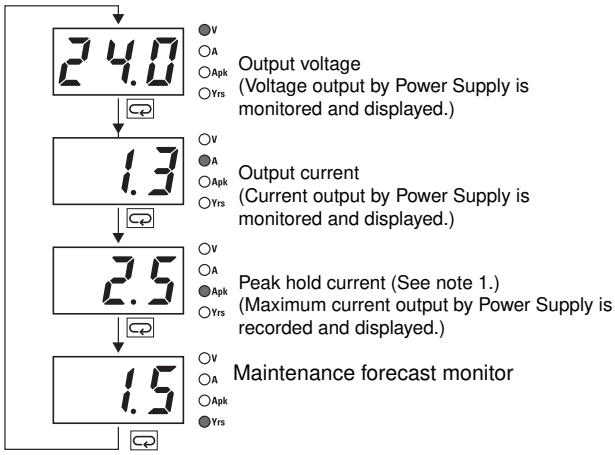

Models with Total Run Time Monitor (S8VS-□□□24B□□/ S8VS-□□□24BE□)

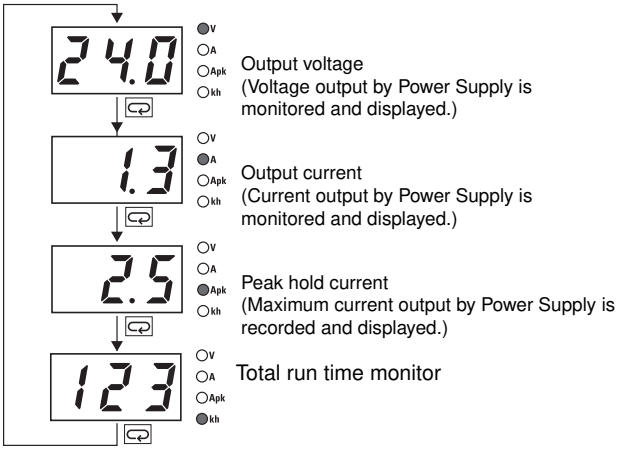

Note: 1. The peak hold current starts measuring the current 3 seconds after the Power Supply is started. Inrush current is thus not measured.
2. For the factory setting, the output voltage will be displayed when the power supply is first turned ON. Thereafter, the output voltage will be indicated in the same display when shutting down.

Setting Mode (Except for S8VS-06024□)

Set various parameters of the Power Supply.

Models with Maintenance Forecast Monitor (S8VS-□□□24A□□)

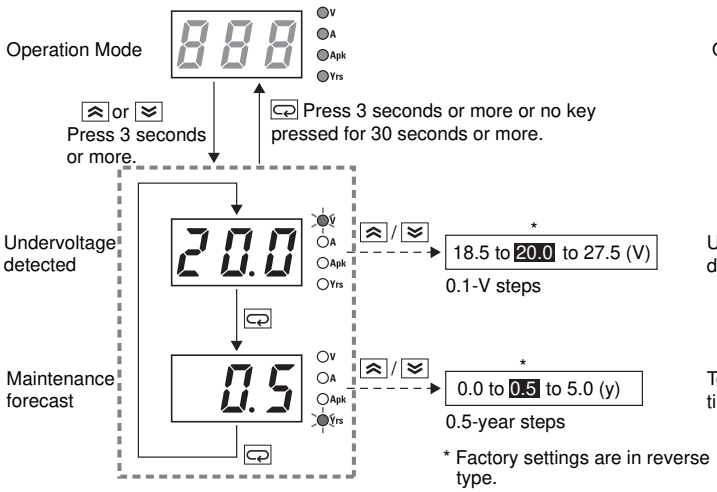

Models with Total Run Time Monitor (S8VS-□□□24B□□/S8VS-□□□24BE□)

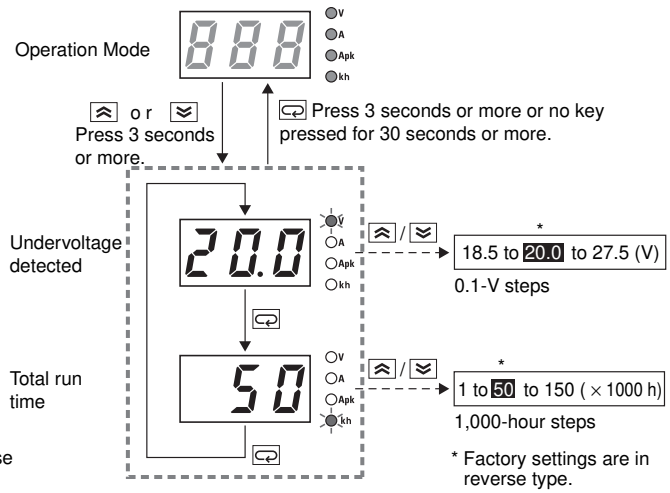

Note: 1. Press and hold the (9) Up Key or (10) Down Key for two seconds or more to increase or decrease the value rapidly.
2. The S8VS-06024□ is not provided with the setting mode and its parameters are fixed at the shipment setting.

Peak Hold Current Reset

The peak value of the output current (i.e., the peak hold current) can be reset on the display.

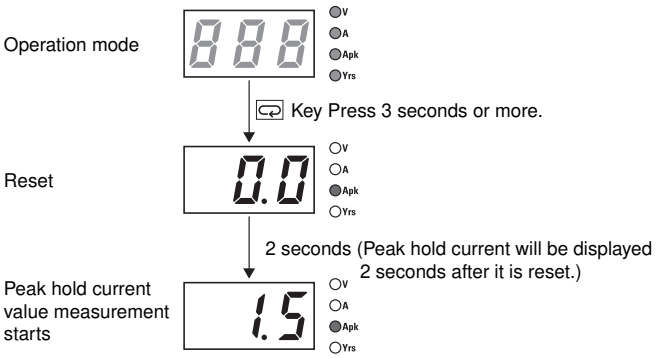

Note: The peak hold current value is not reset in the setting mode.

Undervoltage Alarm Indication

This indicator lights when the output voltage lowers.

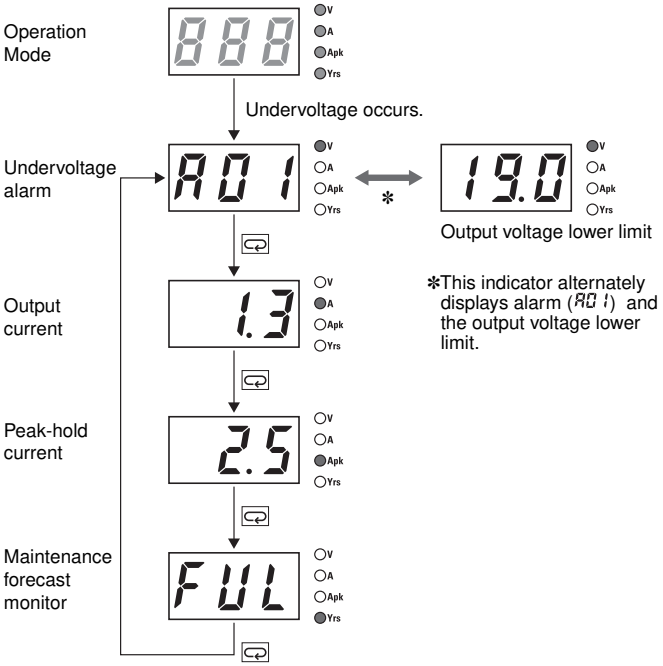

*This indicator alternately displays alarm (A01) and the output voltage lower limit.

Note: 1. When the voltage is restored to the set value or higher and the Key is pressed at the A01 display to return to the output current display, the A01 alarm will be cleared and the normal output display will return.

2. The above displays are for models with a maintenance forecast monitor (S8VS-□□□24A□□).

Multiple Alarms

When two or more different alarms occur at the same time

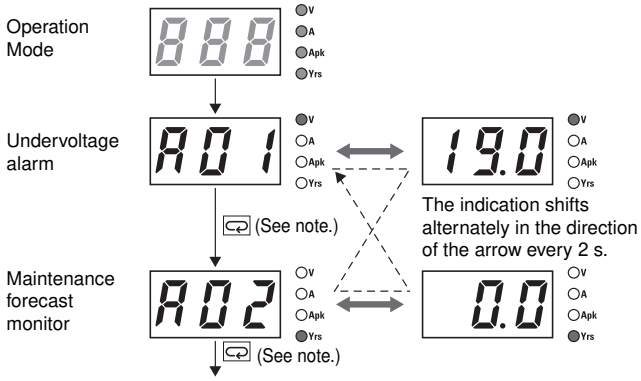

* When undervoltage alarm is indicated: Press Key → output load indication
When the maintenance forecast monitor or overheat alarm is indicated: Press Key → undervoltage alarm indication

Note: 1. The above displays are for models with a maintenance forecast monitor (S8VS-□□□24A□□).

Self-Diagnostics Function

Numbers in the following table indicate the number used in *Nomenclature* on pages 15 and 17.

(6) Main display	Description	Output status	Restoration method	Setting after restoration
- - -	Noise detected in voltage or current	No change	Automatic reset.	No change
Hot	Overheated	Maintenance forecast output terminal (Yrs) turns OFF.	Automatic reset.	No change
E01	Undervoltage alarm set value memory error	Undervoltage output terminal (DC LOW) turns OFF.	Press and hold the Up Key (9) or Down Key (10) for three seconds and check the set value of the corresponding point. The set value must return to the shipment setting	Shipment setting or value set in the setting mode again
E02	Memory error of alarm set value of maintenance forecast monitor or total run time monitor	Maintenance forecast output terminal (Yrs) turns OFF or total run time output terminal (kh) turns OFF.		
E03	Other memory error	Undervoltage output terminal (DC LOW) turns OFF. Maintenance forecast output terminal (Yrs) turns OFF or total run time output terminal (kh) turns OFF.	Turn the AC input OFF then ON again. If the Product is not reset, contact the dealer.	No change

Note: 1. External noise is probable as a cause of "- - -", "E01", "E02", and "E03" errors.
2. Operation out of the derating curve area, ventilation error, and incorrect mounting direction are probable as a cause of "Hot" error.
3. If the "Hot" error state continues for more than three hours, the maintenance forecast monitor function becomes invalid. The Yrs output (Maintenance forecast output terminal (Yrs)) will remain OFF (no continuity).
Replace the power supply if this condition occurs even if the output is correct, as internal parts may be deteriorated.
4. The "Hot" error detection function is only for the S8VS-□□□24A□□.

Maintenance Forecast (S8VS-□□□24A□□)

Displays when the maintenance forecast has reached the set value.

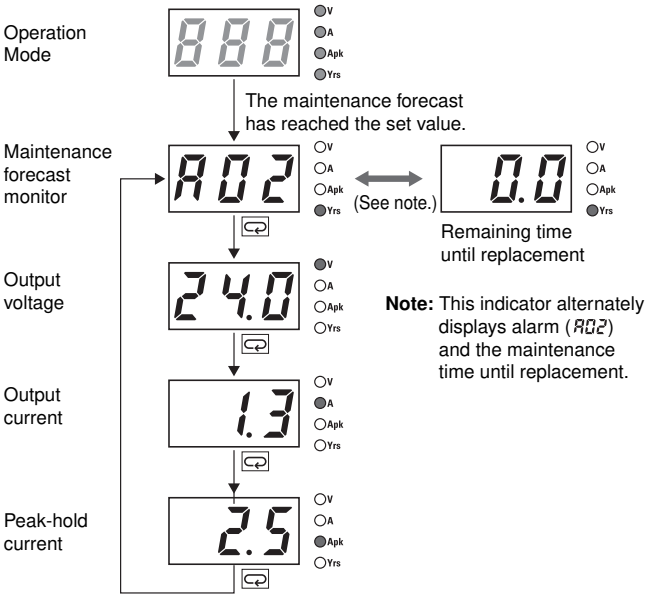

Indication and Output

When the Product is purchased, "FUL" will be indicated. As electrolytic capacitors deteriorate, indication changes to "HLF" (Refer to page 30). "FUL" will be indicated for the maintenance forecast display for approximately one month after the Power Supply is first turned ON. The accumulated value will then be displayed depending on the ambient conditions thereafter. (However, the "HLF" indication may not appear, depending on the usage environment and the set value for maintenance forecast.)

S8VS-06024A:

After the remaining time to maintenance is reduced to less than two years, indication automatically changes to a value, which decreases from "1.5" to "1.0" to "0.5" to "0.0" (year) as the running hours increase. If the remaining time becomes less than 0.5 year, an alarm (A02) and "0.0" are indicated alternately.

S8VS-09024A□□/S8VS-12024A□, S8VS-18024A□/S8VS-24024A□/S8VS-48024A:

If the maintenance forecast setting L (which can be set arbitrarily from 0.0 to 5.0 years in 0.5-year steps) is set to a value larger than two years, the indication automatically changes to a value (L - 0.5) after the remaining time to maintenance is reduced to the set years, and an alarm (A02) and the remaining time are indicated alternately.
If the setting is less than 2.0 years, the indication changes to a value (1.5) after the remaining time becomes less than two years, and after the remaining time becomes less than the set time, an alarm (A02) and the remaining time (L - 0.5) are indicated alternately.
If the alarm (A02) and a numeric value are indicated alternately, a transistor (maintenance forecast output terminal (Yrs)) will turn OFF to indicate the need for maintenance. (The transistor turns OFF when the maintenance forecast time is reached, i.e., there will be no continuity at the maintenance forecast output terminal.)

In the case that the remaining time is reduced to smaller than 0.5 year and an alarm is issued.

Note: 1. The remaining time to maintenance is based on continuous operation, not including the time when the power supply is turned OFF.
2. "FUL" will be indicated until approximately one month of time is accumulated to estimate the speed of deterioration and the output will remain ON (continuity at the maintenance forecast output terminal (Yrs)).
3. For details on the display, refer to *Relationship between Indicated Values and Output of Set Values* under *Maintenance Forecast Monitor Function* on page 30.

Maintenance Forecast Monitor Function

The Power Supply is equipped with electrolytic capacitors.
The electrolyte inside the electrolytic capacitor penetrates the sealing rubber and evaporates as time passes since it is manufactured, which causes deterioration of characteristics such as decreasing the capacitance, etc.
Due to this deterioration of the characteristics of the electrolytic capacitor, the Power Supply decreases its performance as time passes.

The maintenance forecast monitor function shows an approximate period left for maintenance of the Power Supply due to deterioration of electrolytic capacitors. When the period left for maintenance that the power supply forecasts reaches the set value, an alarm is indicated and an output signal is triggered.
Use this function to know the approximate replacement timing of the Power Supply.

Note: The maintenance forecast monitor function indicates an approximate period left for maintenance, based on deterioration of the electrolytic capacitor. It does not predict failures caused by other reasons.

Relationship between Indicated Values and Output of Set Values

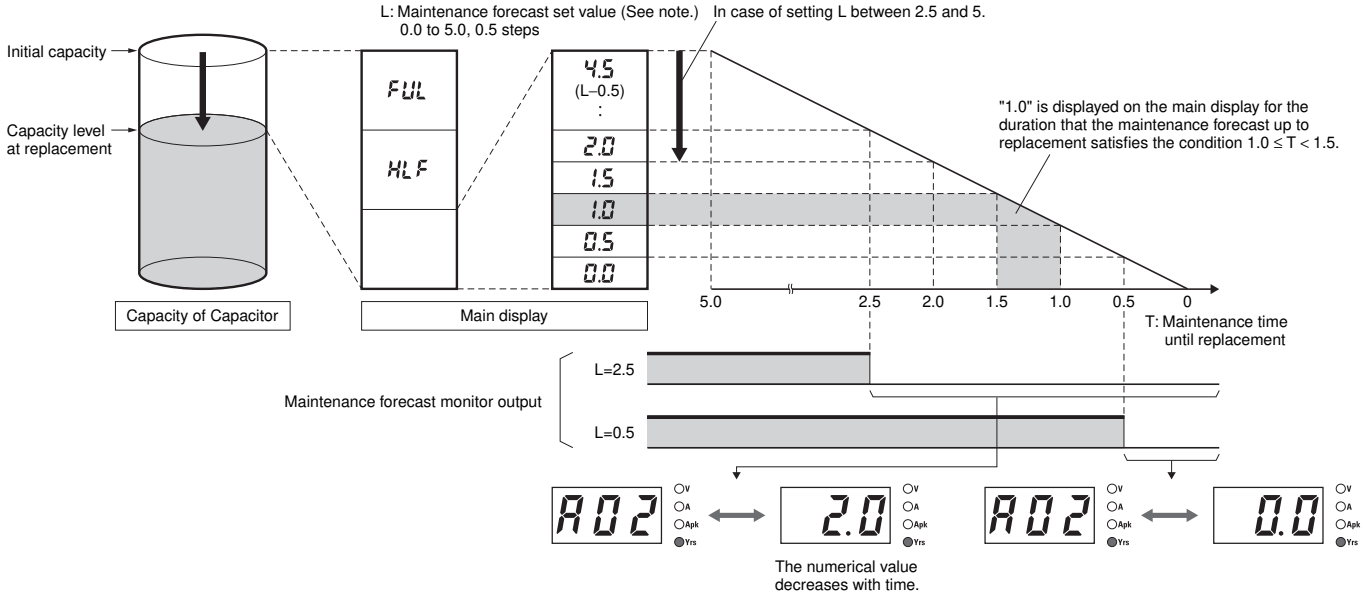

Note: This function can be set only on the S8VS-09024A□□, S8VS-12024A□, S8VS-18024A□, S8VS-24024A□, and S8VS-48024A.

Principle of Operation

The deterioration speed of the electrolytic capacitor varies considerably according to the ambient temperature. (Generally the speed follows “Rule of Two for every 10°C”; for every 10°C increase in temperature the rate of degradation doubles according to Arrhenius’s equation.) The S8VS-□□□24A□□ monitors the temperature inside the power supply, and calculates the amount of deterioration according to the running hours and inside temperature. Judging by this amount of deterioration, the power supply will give the alarm indication and output when the period left for maintenance reaches the set value.

Note: 1. Due to degradation of internal electronic parts, replace the power supply approximately 15 years after purchase even if indication and output of maintenance forecast monitor are not issued.
2. The maintenance forecast is accelerated or decelerated according to operating conditions. Periodically check indication.
3. Acceleration or deceleration of the maintenance forecast may cause the output to repeatedly go ON/OFF.
Only the S8VS-09024A□□, S8VS-12024A□, S8VS-18024A□, S8VS-24024A□, and S8VS-48024A are equipped with output.
4. The accuracy of the maintenance forecast function may be adversely affected by applications in which the AC input is frequently turned ON/OFF.

Reference Values (15-W to 480-W Models)

Item	Value	Definition
Reliability (MTBF)	15 W to 240 W: 135,000 hr min. 480 W: 60,000 hr min.	MTBF stands for Mean Time Between Failures, which is calculated according to the probability of accidental device failures, and indicates reliability of devices. Therefore, it does not necessarily represent the life of the Product.
Life expectancy	10 yr min.	The life expectancy indicates average operating hours under the ambient temperature of 40°C and a load rate of 50%. Normally this is determined by the life expectancy of the built-in aluminum electrolytic capacitor.

Note: The maintenance forecast is the service life (the power supply’s internal temperature is monitored at all times) of the internal electrolytic capacitor in actual operating conditions, and varies according to the customer’s operating conditions. 15 years is taken as the maximum period of the maintenance forecast.

Models with Total Run Time Monitor (S8VS-□□□24B□□/S8VS-□□□24BE□)

S8VS-06024B

The accumulated value of the operating time of the Power Supply is displayed as the total run time. 0 (kh) will be displayed initially after purchase and then the display will advance in 1-kh steps as the operating time accumulates. The S8VS-06024B, however, does not have an alarm function (setting, display, or output).

S8VS-09024B□□/S8VS-09024BE□/ S8VS-12024B□/S8VS-12024BE/ S8VS-18024B□/S8VS-18024BE/ S8VS-24024B□/S8VS-24024BE/S8VS-48024B

The display will appear when the set value for the total run time has been reached.

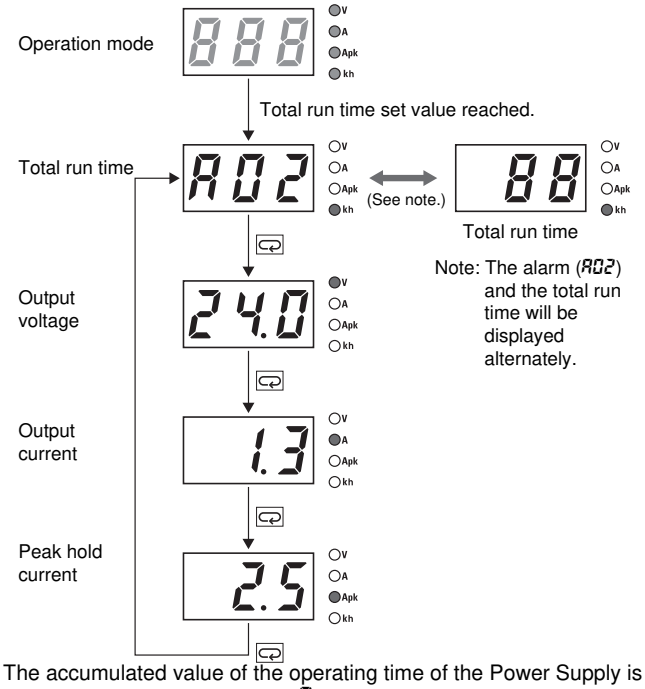

The accumulated value of the operating time of the Power Supply is displayed as the total run time. 0 (kh) will be displayed initially after purchase and then the display will advance in 1-kh steps as the operating time accumulates. When the total run time reaches the alarm set value, the alarm (A02) and the total run time will be displayed alternately and a transistor (total run time output terminal (kh)) will output the status externally.
(Alarm set value reached = OFF, i.e., no continuity at the total run time output terminal (kh))
The alarm set value can be changed in the setting mode.
The S8VS-09024BE□, S8VS-12024BE, S8VS-18024BE, and S8VS-24024BE do not have an alarm output.

Example: Alarm Displays When a Total Run Time Set Value of 88 kh Is Reached

Note: The total run time cannot be reset. To clear the alarm, change the alarm set value to a value higher than the value displayed for the total run time.

Time Chart

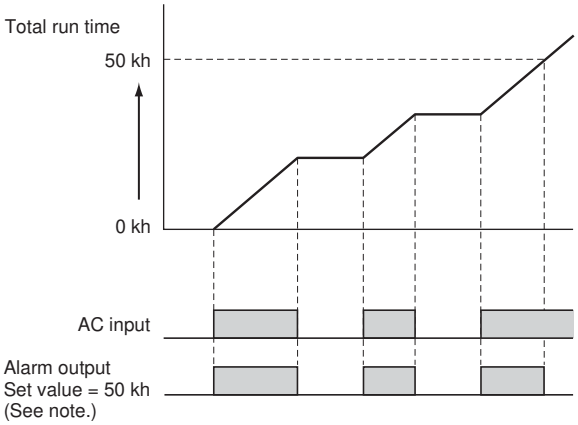

* Setting is possible for the following models only: S8VS-09024B□□, S8VS-09024BE□, S8VS-12024B□, S8VS-12024BE, S8VS-18024B□, S8VS-18024BE, S8VS-24024B□, S8VS-24024BE, S8VS-48024B

Note: 1. The total run time does not include the time that the Power Supply is OFF.
2. The total run time measures the total time that power is being supplied and is not related in any way to deterioration in the electrolytic capacitor built into the Power Supply or to the effects of the ambient temperature.

Safety Precautions

⚠ CAUTION

Minor electric shock, fire, or Product failure may occasionally occur. Do not disassemble, modify, or repair the Product or touch the interior of the Product.

Minor burns may occasionally occur. Do not touch the Product while power is being supplied or immediately after power is turned OFF.

Fire may occasionally occur. Tighten terminal screws to the specified torque (15- and 30-W models: 0.8 to 1.0 N·m/60-, 90-,120-, 180-, 240-, and 480-W models: 1.08 N·m).

Minor injury due to electric shock may occasionally occur. Do not touch the terminals while power is being supplied. Always close the terminal cover after wiring.

Minor electric shock, fire, or Product failure may occasionally occur. Do not allow any pieces of metal or conductors or any clippings or cuttings resulting from installation work to enter the Product.

Precautions for Safe Use

Mounting

- Take adequate measures to ensure proper heat dissipation to increase the long-term reliability of the Product. Be sure to allow convection in the atmosphere around devices when mounting. Do not use in locations where the ambient temperature exceeds the range of the derating curve.
- When cutting out holes for mounting, make sure that cuttings do not enter the interior of the Products.

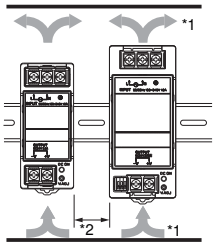

*1. Convection of air
*2. 20 mm min.

15-W and 30-W Models

- Improper mounting will interfere with heat dissipation and may occasionally result in deterioration or damage of internal parts. Use the Product within the derating curve for the mounting direction that is used.
- Use a mounting bracket when the Product is mounted facing horizontally.
- Heat dissipation will be adversely affected. When the Product is mounted facing horizontally, always place the side with the label facing upward.
- Operate the Power Supply within a range that is 5°C less than the values in the derating curve in *Engineering Data* on page 18 if the Power Supply is used with an installation spacing of 10 mm min. (20 mm max.) on the left and right.

60-W, 90-W, 120-W, 180-W, 240-W, and 480-W Models

- Improper mounting will interfere with heat dissipation and may occasionally result in deterioration or damage of internal parts. Use the standard mounting method only.
- The internal parts may occasionally deteriorate and be broken due to adverse heat radiation. Do not loosen the screw on the side face of the main body.

Wiring

- Connect the ground completely. A protective earthing terminal stipulated in safety standards is used. Electric shock or malfunction may occur if the ground is not connected completely.
- Minor fire may possibly occur. Ensure that input and output terminals are wired correctly.
- Do not apply more than 100-N force to the terminal block when tightening it.
- Be sure to remove the sheet covering the Product for machining before power-ON so that it does not interfere with heat dissipation.
- When wiring a screwless terminal block, do not insert more than one wire into a single terminal.
- When using a screwless terminal block, connect or disconnect the I/O wire to each terminal while inserting an appropriate tool, such as a flat-blade screwdriver, into the tool insertion hole. Make sure that the wire is securely connected to the terminal after wiring. Do not insert wires into the tool insertion holes.
  If a wire is not inserted far enough or if it is loose, electric shock, fire, or equipment failure may occur. Strip the wires according to specifications. Insert an appropriate tool, such as a flat-blade screwdriver, into the tool insertion hole, insert the wire until the stripped portion is no longer visible, and then remove the tool. Make sure that the wires are securely connected to the terminal block after wiring. Never insert wires into the tool insertion holes.

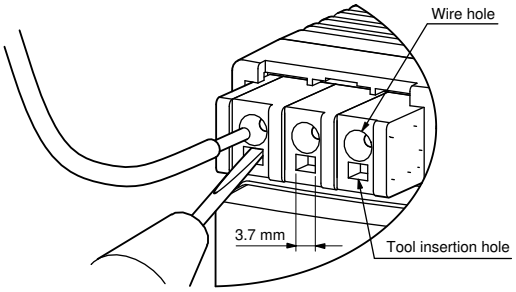

- The method of use Alarm output terminal
  The method of use Alarm output terminal is push the button then insert or pull out the wire.
  Please make sure that the wire is already fixed on the terminal.

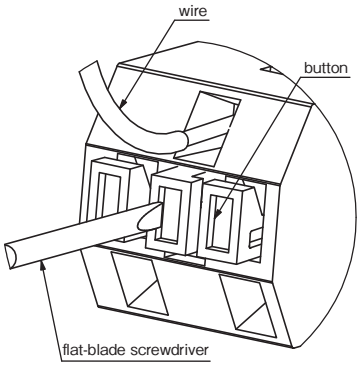

- Use the following material for the wires to be connected to the S8VS to prevent smoking or ignition caused by abnormal loads.

Recommended Wire Type
15-W and 30-W Models

Model	Stranded wire	Solid wire
S8VS-03005	AWG18 to 14 (0.9 to 2.0 mm^2)	AWG18 to 16 (0.9 to 1.1 mm^2)
Other models	AWG20 to 14 (0.5 to 2.0 mm^2)	AWG20 to 16 (0.5 to 1.1 mm^2)

60-W, 90-W, 120-W, 180-W, 240-W, and 480-W Models

Model	Recommended wire size		
	Input terminals	Output terminals	Alarm output terminals
S8VS-06024□	AWG14 to 20 (Cross section: 0.517 to 2.081 mm^2)	AWG14 to 20 (Cross section: 0.517 to 2.081 mm^2)	---
S8VS-09024□□□□			AWG18 to 28 (Cross section: 0.081 to 0.823 mm^2) (Wires to be stripped: 9 to 10 mm)
S8VS-12024□□□		AWG14 to 18 (Cross section: 0.823 to 2.081 mm^2)	
S8VS-18024□□□		AWG14 to 16 (Cross section: 1.309 to 2.081 mm^2)	
S8VS-24024□□□		AWG14 (Cross section: 2.081 mm^2)	
S8VS-48024□	AWG 14 to 16 (Cross section: 1,309 to 2,081 mm^2)		

- Strip I/O wires for 11 mm when using a screwless terminal block.

✻ The rated current for output terminals is 10 A per terminal. Be sure to use multiple terminals simultaneously for current that exceeds the terminal rating. When applying a current of 10 A or more, use at least two terminals each for the positive and negative wires.

Installation Environment

- Do not use the Power Supply in locations subject to shocks or vibrations. In particular, install the Power Supply as far away as possible from contactors or other devices that are a vibration source.
- Install the Power Supply well away from any sources of strong, high-frequency noise and surge.

Operating Life

- The life of a Power Supply is determined by the life of the electrolytic capacitors used inside. Here, Arrhenius Law applies, i.e., the life will be cut in half for each rise of 10°C or the life will be doubled for each drop of 10°C. The life of the Power Supply can thus be increased by reducing its internal temperature.

Ambient Operating and Storage Environments

- Store the Power Supply at a temperature of –25 to 65°C and a humidity of 25% to 90%.
- Do not use the Power Supply in areas outside the derating curve otherwise, internal parts may occasionally deteriorate or be damaged.
- Use the Power Supply at a humidity of 25% to 85%.
- Do not use the Power Supply in locations subject to direct sunlight.
- Do not use locations where liquids, foreign matter, or corrosive gases may enter the interior of Products.

S8VS-□□□24A□□ Models only

Satisfy the following conditions when storing the Power Supply for long periods of time to maintain its remaining service life function. When storing for more than three months, store within an ambient temperature range of –25 to +30°C and the humidity range of 25% to 70%.

Periodic Check for Models with Indication Monitor Except 60-W Models

It may take from several years to more than 10 years under general operating conditions for the power supply to output the maintenance forecast monitor alarm (S8VS-□□□24A□□). The total run time monitor (S8VS-□□□24B□□/S8VS-□□□24BE□) may be a similar number of years as the maintenance forecast monitor according to some settings. During operation over an extended period of time, periodically check if the maintenance forecast monitor output (Yrs) or total run time monitor output (kh) is correctly functioning by the following procedure.

1. Select the operation mode.
2. Check that the output (Yrs/kh) is turned ON (with continuity).
3. In the operation mode, press and hold the Down Key (10) and the Mode Key (8) simultaneously for at least three seconds. The main display (6) changes to "A02."
   An inactive output (Yrs/kh) (no continuity) in the "A02" indication indicates the correct function.
4. Release keys to return to the regular state.

Note: DC output stays ON during the periodical check.

60-, 90-, 120-, 180-, 240-W Models

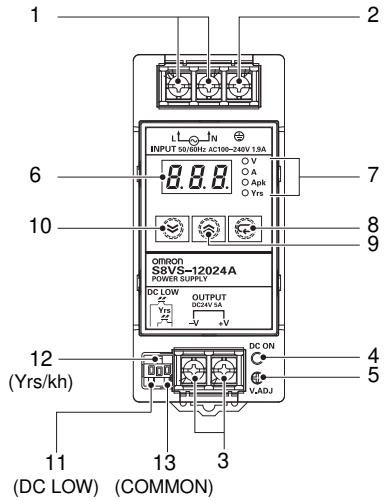

480-W Models

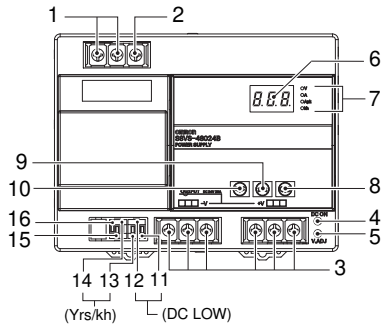

Overcurrent Protection

- Internal parts may possibly deteriorate or be damaged if a short-circuited or overcurrent state continues during operation.
- Internal parts may possibly deteriorate or be damaged if the Power Supply is used for applications with frequent inrush current or overloading at the load end. Do not use the Power Supply for such applications.
- The DC ON indicator (green) flashes if the overload protection function operates.

Alarm Output for Models with Indication Monitor Except 60-W and BE Models

When using the alarm output, sufficiently consider the maximum ratings, residual voltage, and leakage current.

Transistor output: Sinking for S8VS-24A□/□□□24B□ models
Sourcing for S8VS-□□□24AP□/□□□24BP□ models
Sinking/Sourcing for S8VS-48024A/B models

30 VDC max., 50 mA max.
ON residually voltage: 2 V max.
OFF leakage current: 0.1 mA max.

Charging a Battery

If you connect a battery as the load, install overcurrent control and overvoltage protection circuits.

Output Voltage Adjuster (V.ADJ)

- The output voltage adjuster (V.ADJ) may possibly be damaged if it is turned with unnecessary force. Do not turn the adjuster with excessive force.
- After completing output voltage adjustment, be sure that the output capacity or output current does not exceed the rated output capacity or rated output current.

15-W, 30-W Models

- If the output voltage is set to a value less than –10%, the undervoltage alarm function may operate.

60-W, 90-W, 120-W, 180-W, 240-W, and 480-W Models

- If the detection voltage of the undervoltage alarm function is at the factory setting and the output voltage is set to a value of 20 V or less, the undervoltage alarm function may operate.

DIN Rail Mounting

To mount the Block on a DIN Rail, hook portion (A) of the Block onto the rail and press the Block in direction (B).

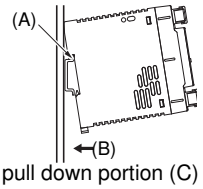

To dismount the Block, pull down portion (C) with a flat-blade screwdriver and pull out the Block.

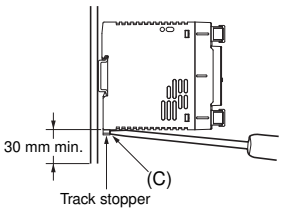

Series Operation

(24-V Model)

Two power supplies can be connected in series.

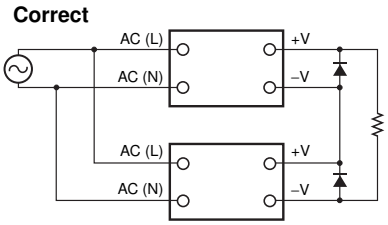

Note: 1. The diode is connected as shown in the figure. If the load is short-circuited, a reverse voltage will be generated inside the Power Supply. If this occurs the Power Supply may possibly deteriorate or be damaged. Always connect a diode as shown in the figure.
Select a diode having the following ratings.

Type	Schottky Barrier diode
Dielectric strength (V_{RRM})	Twice the rated output voltage or above
Forward current (I_F)	Twice the rated output current or above

2. Although Products having different specifications can be connected in series, the current flowing through the load must not exceed the smaller rated output current.
3. Serial operation is not possible with 5-V and 12-V models.

Making Positive/Negative Outputs

- The outputs are floating outputs (i.e., the primary circuits and secondary circuits are separated). You can therefore make positive and negative outputs by using two Power Supplies. You can make positive and negative outputs with any of the models.
  If positive and negative outputs are used, connect Power Supplies of the same model as in the following figure. (Combinations with different output capacities or output voltages can be made. However, use the lower of the two maximum rated output currents as the current to the loads.)

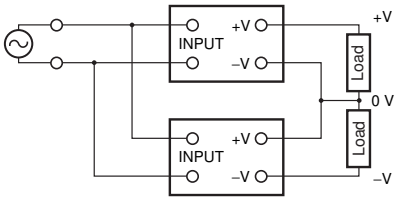

- Depending on the model, internal circuits may be damaged due to startup failure when the power is turned ON if loads such as a servomotor or operational amplifier may operate in series. Therefore, connect bypass diodes (D1, D2) as shown in the following figure.

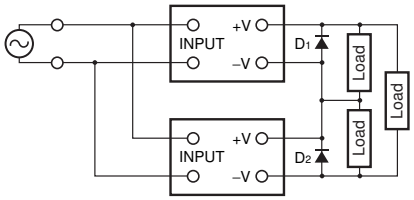

- Use the following information as a guide to the diode type, dialectic strength, and current.

- Type: Schottky barrier diode
- Dielectric strength (V_{RRM}): Twice the rated Power Supply output voltage or higher
- Forward current (I_F): Twice the rated Power Supply output current or higher

Parallel Operation

The Product is not designed for parallel operation.

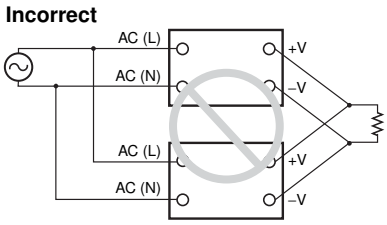

Backup Operation

- Backup operation can be performed. Backup operation provides protection by using an extra Power Supply even if the output current is sufficient with one Power Supply. If one of the Power Supplies fails, the second Power Supply still provides sufficient power.

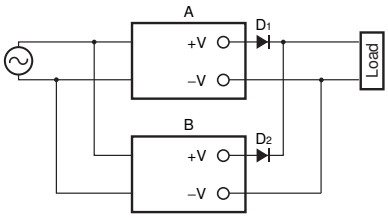

Use the same model for Power Supplies A and B.

- Use a load capacity that can be supplied by either Power Supply A or Power Supply B alone.
- If backup operation is used, be sure to connect a diode to both Power Supply A and Power Supply B as shown in the above figure so that the backup Power Supply is not affected by a failed Power Supply.
  Use the following information as a guide to the diode type, dialectic strength, and current.

- Type: Schottky barrier diode
- Dielectric strength (V_{RRM}): Rated Power Supply output voltage or higher
- Forward current (I_F): Twice the rated Power Supply output current or higher

- Increase the output voltage setting of Power Supply A and Power Supply B by the drop in the forward voltage (V_F) of diodes D1 and D2.
  Also, the diodes will cause a power loss equivalent to the Power Supply output current (I_{OUT}) times the diode forward voltage (V_F). Therefore, cooling measures must be implemented so that the temperature of the diodes decreases to the catalog value or lower.
- Because of the load power and power loss due to the diodes, do not exceed the rated power of one Power Supply (rated output voltage x rated output current).

In Case There Is No Output Voltage

The possible cause for no output voltage may be that the overcurrent or overvoltage protection has operated. The internal protection may operate if a large amount of surge voltage such as a lightening surge occurs while turning ON the power supply.
In case there is no output voltage, please check the following points before contacting us:

- Checking overload protected status:
  Check whether the load is in overload status or is short-circuited. Remove wires to load when checking.
- Checking overvoltage or internal protection:
  Turn the power supply OFF once, and leave it OFF for at least 3 minutes. Then turn it ON again to see if this clears the condition.

Audible Noise at Power ON

(120-W, 180-W, 240-W, and 480-W Models)

A harmonic current suppression circuit is built into the Power Supply. This circuit can create noise when the input is turned ON, but it will last only until the internal circuits stabilize and does not indicate any problem in the Product.

ALL DIMENSIONS SHOWN ARE IN MILLIMETERS.
To convert millimeters into inches, multiply by 0.03937. To convert grams into ounces, multiply by 0.03527.

In the interest of product improvement, specifications are subject to change without notice.

MEMO

Terms and Conditions Agreement

Read and understand this catalog.

Please read and understand this catalog before purchasing the products. Please consult your OMRON representative if you have any questions or comments.

Warranties.

(a) Exclusive Warranty. Omron's exclusive warranty is that the Products will be free from defects in materials and workmanship for a period of twelve months from the date of sale by Omron (or such other period expressed in writing by Omron). Omron disclaims all other warranties, express or implied.

(b) Limitations. OMRON MAKES NO WARRANTY OR REPRESENTATION, EXPRESS OR IMPLIED, ABOUT NON-INFRINGEMENT, MERCHANTABILITY OR FITNESS FOR A PARTICULAR PURPOSE OF THE PRODUCTS. BUYER ACKNOWLEDGES THAT IT ALONE HAS DETERMINED THAT THE PRODUCTS WILL SUITABLY MEET THE REQUIREMENTS OF THEIR INTENDED USE.

Omron further disclaims all warranties and responsibility of any type for claims or expenses based on infringement by the Products or otherwise of any intellectual property right. (c) Buyer Remedy. Omron's sole obligation hereunder shall be, at Omron's election, to (i) replace (in the form originally shipped with Buyer responsible for labor charges for removal or replacement thereof) the non-complying Product, (ii) repair the non-complying Product, or (iii) repay or credit Buyer an amount equal to the purchase price of the non-complying Product; provided that in no event shall Omron be responsible for warranty, repair, indemnity or any other claims or expenses regarding the Products unless Omron's analysis confirms that the Products were properly handled, stored, installed and maintained and not subject to contamination, abuse, misuse or inappropriate modification. Return of any Products by Buyer must be approved in writing by Omron before shipment. Omron Companies shall not be liable for the suitability or unsuitability or the results from the use of Products in combination with any electrical or electronic components, circuits, system assemblies or any other materials or substances or environments. Any advice, recommendations or information given orally or in writing, are not to be construed as an amendment or addition to the above warranty.

See http://www.omron.com/global/ or contact your Omron representative for published information.

Limitation on Liability; Etc.

OMRON COMPANIES SHALL NOT BE LIABLE FOR SPECIAL, INDIRECT, INCIDENTAL, OR CONSEQUENTIAL DAMAGES, LOSS OF PROFITS OR PRODUCTION OR COMMERCIAL LOSS IN ANY WAY CONNECTED WITH THE PRODUCTS, WHETHER SUCH CLAIM IS BASED IN CONTRACT, WARRANTY, NEGLIGENCE OR STRICT LIABILITY.

Further, in no event shall liability of Omron Companies exceed the individual price of the Product on which liability is asserted.

Suitability of Use.

Omron Companies shall not be responsible for conformity with any standards, codes or regulations which apply to the combination of the Product in the Buyer's application or use of the Product. At Buyer's request, Omron will provide applicable third party certification documents identifying ratings and limitations of use which apply to the Product. This information by itself is not sufficient for a complete determination of the suitability of the Product in combination with the end product, machine, system, or other application or use. Buyer shall be solely responsible for determining appropriateness of the particular Product with respect to Buyer's application, product or system. Buyer shall take application responsibility in all cases.

NEVER USE THE PRODUCT FOR AN APPLICATION INVOLVING SERIOUS RISK TO LIFE OR PROPERTY OR IN LARGE QUANTITIES WITHOUT ENSURING THAT THE SYSTEM AS A WHOLE HAS BEEN DESIGNED TO ADDRESS THE RISKS, AND THAT THE OMRON PRODUCT(S) IS PROPERLY RATED AND INSTALLED FOR THE INTENDED USE WITHIN THE OVERALL EQUIPMENT OR SYSTEM.

Programmable Products.

Omron Companies shall not be responsible for the user's programming of a programmable Product, or any consequence thereof.

Performance Data.

Data presented in Omron Company websites, catalogs and other materials is provided as a guide for the user in determining suitability and does not constitute a warranty. It may represent the result of Omron's test conditions, and the user must correlate it to actual application requirements. Actual performance is subject to the Omron's Warranty and Limitations of Liability.

Change in Specifications.

Product specifications and accessories may be changed at any time based on improvements and other reasons. It is our practice to change part numbers when published ratings or features are changed, or when significant construction changes are made. However, some specifications of the Product may be changed without any notice. When in doubt, special part numbers may be assigned to fix or establish key specifications for your application. Please consult with your Omron's representative at any time to confirm actual specifications of purchased Product.

Errors and Omissions.

Information presented by Omron Companies has been checked and is believed to be accurate; however, no responsibility is assumed for clerical, typographical or proofreading errors or omissions.

OMRON Corporation **Industrial Automation Company**
Kyoto, JAPAN
Contact: www.ia.omron.com

Regional Headquarters
OMRON EUROPE B.V.
Wegalaan 67-69, 2132 JD Hoofddorp
The Netherlands
Tel: (31)2356-81-300/Fax: (31)2356-81-388

OMRON ELECTRONICS LLC
2895 Greenspoint Parkway, Suite 200
Hoffman Estates, IL 60169 U.S.A.
Tel: (1) 847-843-7900/Fax: (1) 847-843-7787

OMRON ASIA PACIFIC PTE. LTD.
No. 438A Alexandra Road # 05-05/08 (Lobby 2),
Alexandra Technopark,
Singapore 119967
Tel: (65) 6835-3011/Fax: (65) 6835-2711

OMRON (CHINA) CO., LTD.
Room 2211, Bank of China Tower,
200 Yin Cheng Zhong Road,
PuDong New Area, Shanghai, 200120, China
Tel: (86) 21-5037-2222/Fax: (86) 21-5037-2200

Authorized Distributor:

© OMRON Corporation 2002-2016 All Rights Reserved.
In the interest of product improvement,
specifications are subject to change without notice.

CSM_7_4_0519 Printed in Japan
Cat. No. T026-E1-09 0616 (0312)