OMRON

S8VK POWER SUPPLIES

Reliable and easy operation – worldwide

» The most compact class on the market

» Resistant in tough environments

» Easy and fast installation

realizing

Compact power supplies...

Omron has developed a new and exciting family of compact power supplies. With the same high quality and practical design that made our previous series safe, reliable, and easy to install, the new S8VK series is even tougher, more compact and easier to use. Omron is a world leader in the development and manufacture of industrial power supplies. We launched our first compact product, the S82K, in 1987 and our S8VS compact series has been an automatic choice with customers since 2002.

To ensure that we provide the perfect solution to match every customer's need, Omron has launched 4 different families: the cost effective S8VK-C, the standard with single-phase input S8VK-G, the standard with three-phase input S8VK-T, and the redundancy unit S8VK-R.

...that make a world of difference!

Three compelling reasons why the S8VK is the right power supply for you:

Resistant in tough environments

Omron is confident that the quality of the S8VK will exceed your high expectations. Its robust design and construction withstand harsh environments and provide stable operation over a wide operating temperature range. Because of high MTBF figures, your S8VK will keep running in stable condition for a long term.

Easy and fast installation

The S8VK series not only offers you greater flexibility when designing your machine, it also saves you time and reduces costs thanks to the minimal wiring requirements and easy one-handed mounting provided by the enhanced DIN-rail mounting clip.

The most compact class on the market

Designed with space saving in mind, the S8VK series is our most compact power-supply range ever and the most compact class on today's market.

Resistant in tough environments

Wherever the S8VK is installed within the range of the S8VK derating curve, it will give the same reliable performance for the duration of its service life. The wide operating temperature range of between -40°C to 70°C (S8VK-G/T/R) guarantees stable operation in any environment where other power supplies may be found lacking. But its robust design advantages don't end there because the S8VK also offers high resistance to the vibration transmitted by machinery in close proximity, this is due to the vibration-resistant DIN-rail mounting clip.

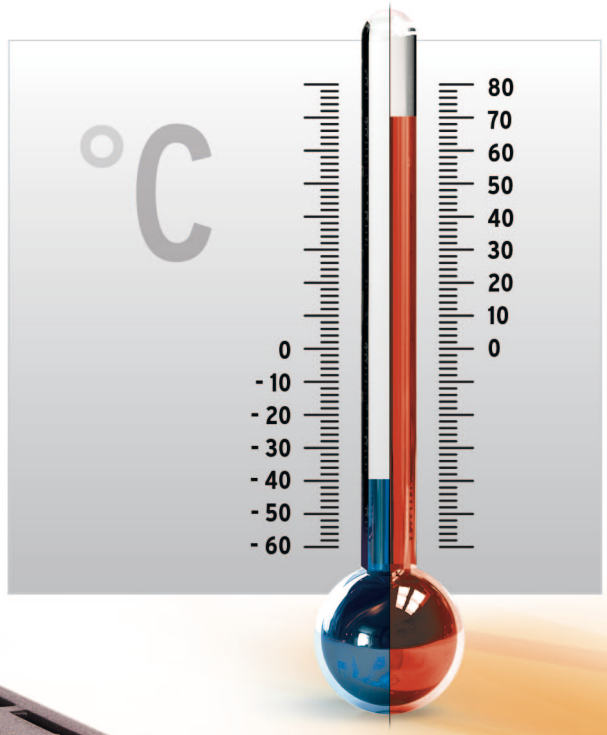

The image is for illustration purposes only.

Easy and fast installation

Making your life easier

Simply click onto a standard DIN rail using one hand to mount in a flash. Effortless and time saving! In addition, the S8VK features a double set of DC output terminals (three for the negative terminal), which means you also spend less time and effort on wiring.

Long-life guaranteed

Designed to international safety standards for global markets, the S8VK even has approvals for marine applications (S8VK-G/T/R) and carries an across-the-board, warranty on all models no matter which country your machine is exported to! Because of high MTBF figures, your S8VK will keep running in stable condition for a long term.

The most compact class on the market

Designed with downsizing in mind

Omron knows that size is important for machine designers, which is why we have applied our developed technology using thermal simulation for the design of the S8VK. This enabled the S8VK compact size body. This gives a high power density in a compact package. And the S8VK has an even sleeker exterior than any previous models.

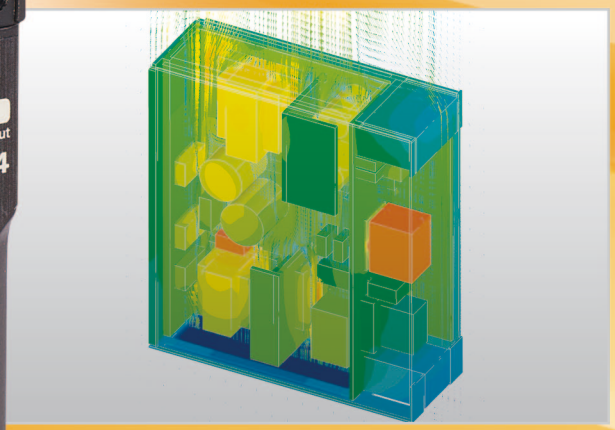

Thermal view

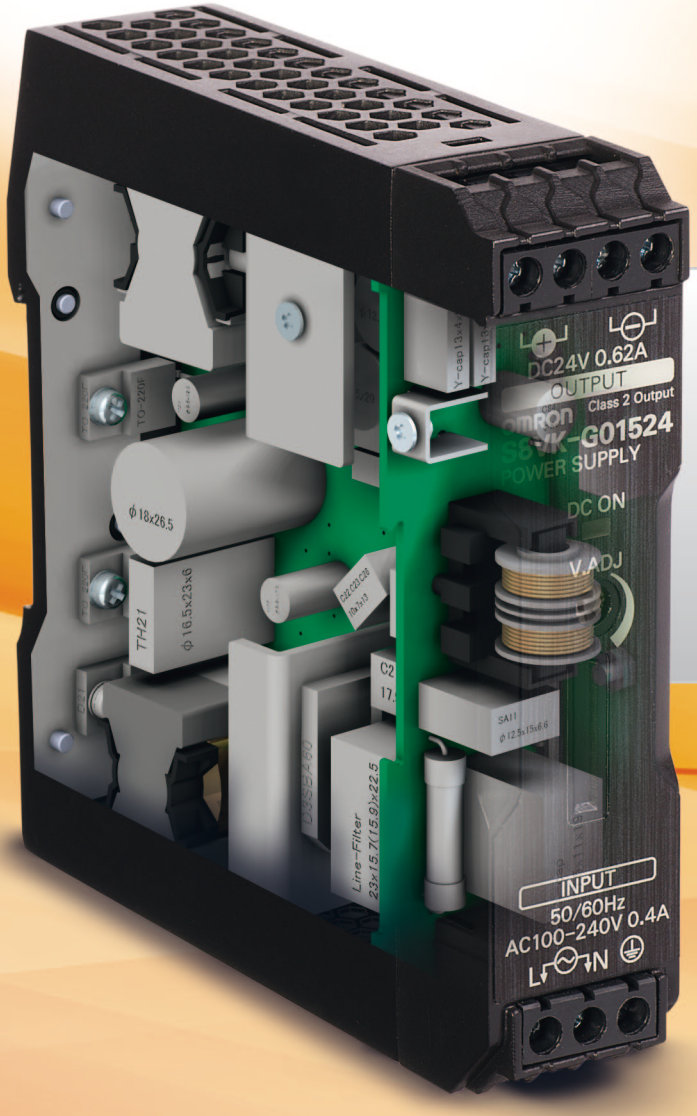

Component view

The S8VK series line up

The perfect match for your needs

To ensure that we have the perfect solution to match every need, Omron offers three different families:

- The cost effective S8VK-C line with uncompromising quality.
- The standard S8VK-G and three phase S8VK-T, our “install & forget” option, offering longer lifetime, higher protection and more features.
- The redundancy unit S8VK-R designed for specific applications and special demands.

Featuring		Power Supply			Redundancy Unit
		S8VK-C	S8VK-G	S8VK-T	S8VK-R
INPUT	Single Phase AC	100-240VAC		-	-
	Three Phase AC	-		380-480VAC	-
	DC	90-350VDC		450-600VDC* * Excluding 960 W	5-30VDC,10-60VDC
Operation Temperature		-25 °C to 60 °C	-40 °C to 70 °C		-40 °C to 70 °C
Safety standards		UL 508 (Listing), UL 60950-1 (Recognition) cUL No.107.1, cUR No.60950-1 EN 50178, EN 60950-1		‹120W› UL 508(Listing),EN 50178 ‹240/480/960W› UL 508 (Listing) UL 60950-1(Recognition) cUR No.60950-1 EN 50178, EN 60950-1	UL 508(Listing), UL 60950-1(Recognition) cUL No.107.1, cUR No.60950-1 EN 50178, EN 60950-1
CE		Yes	Yes	Yes	Yes
RoHS		Yes	Yes	Yes	Yes
Marine applications		-	Lloyd's Register		Lloyd's Register
EMI		EN61204-3 EN55011 ClassA	EN61204-3 EN55011 ClassB	EN61204-3 EN55011 ClassB	EN61000-6-3 EN55011 ClassB
Harmonic current emissions		EN 61000-3-2 (240W/480W)	EN 61000-3-2	EN 61000-3-2	-
Parallel Operation		No	Yes	Yes	-
Additional features		No	Power boost 120%		Redundancy OK LED Voltage Balance LED

Ordering information

S8VK-G series

Type	Power ratings	Input voltage	Output voltage	Output current	Boost current	Size (W × H × D) [mm]	Order code
Power supply Single phase	15 W	100 to 240 VAC, 90 to 350 VDC	5 V	3 A	3.6 A	22.5 × 90 × 90	S8VK-G01505
			12 V	1.2 A	1.44 A		S8VK-G01512
			24 V	0.65 A	0.78 A		S8VK-G01524
	30 W		5 V	5 A	6 A	32 × 90 × 90	S8VK-G03005
			12 V	2.5 A	3 A		S8VK-G03012
			24 V	1.3 A	1.56 A		S8VK-G03024
	60 W		12 V	4.5 A	5.4 A	32 × 90 × 110	S8VK-G06012
			24 V	2.5 A	3 A		S8VK-G06024
	120 W		24 V	5 A	6 A	40 × 125 × 112.2	S8VK-G12024
	240 W		24 V	10 A	12 A	60 × 125 × 140	S8VK-G24024
			48 V	5 A	6 A		S8VK-G24048
	480 W		24 V	20 A	24 A	95 × 125 × 140	S8VK-G48024
			48 V	10 A	12 A		S8VK-G48048

S8VK-C series

Type	Power ratings	Input voltage	Output voltage	Output current	Boost current	Size (W × H × D) [mm]	Order code
Power supply Single phase	60 W	100 to 240 VAC, 90 to 350 VDC	24 V	2.5 A	-	32 × 90 × 110	S8VK-C06024
	120 W		24 V	5 A	-	40 × 125 × 112.2	S8VK-C12024
	240 W		24 V	10 A	-	60 × 125 × 140	S8VK-C24024
	480 W		24 V	20 A	-	95 × 125 × 140	S8VK-C48024

S8VK-T series

Type	Power ratings	Input voltage	Output voltage	Output current	Boost current	Size (W × H × D) [mm]	Order code
Power supply Three phase	120 W	380 to 480 VAC, 450 to 600 VDC	24 V	5 A	6 A	40 × 125 × 112.2	S8VK-T12024
	240 W		24 V	10 A	12 A	60 × 125 × 140	S8VK-T24024
	480 W		24 V	20 A	24 A	95 × 125 × 140	S8VK-T48024
	960 W	380 to 480 VAC	24 V	40 A	48 A	135 × 125 × 170	S8VK-T96024

S8VK-R series

Type	Current ratings	Input voltage	Output current	Size (W × H × D) [mm]	Order code
Redundancy Module	10 A	5 to 30 VDC	10 A	32 × 90 × 110	S8VK-R10
	20 A	10 to 60 VDC	20 A	40 × 125 × 112.2	S8VK-R20

S8VK-G Nomenclature

15-W Models	30-W / 60-W / 120-W / 240-W Models	480-W Models
S8VK-G015□□	S8VK-G030□□/S8VK-G060□□/S8VK-G12024/S8VK-G240□□	S8VK-G480□□

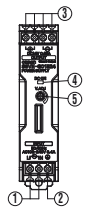

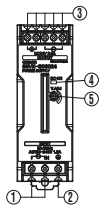

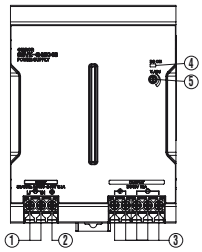

Note: The S8VK-G06024 is shown above.

No.	Name	Function
1	Input terminals (L), (N)	Connect the input lines to these terminals. *1
2	Protective Earth terminal (PE)	Connect the ground line to this terminal. *2
3	DC Output terminals (-V), (+V)	Connect the load lines to these terminals.
4	Output indicator (DC ON: Green)	Lights while a direct current (DC) output is ON.
5	Output voltage adjuster (V.ADJ)	Use to adjust the voltage.

*1. The fuse is located on the (L) side. It is not user-replaceable. For a DC input, connect the positive voltage to the L terminal.
*2. This is the protective earth terminal specified in the safety standards. Always ground this terminal.

S8VK-G Dimensions

S8VK-G015□□ (15 W)

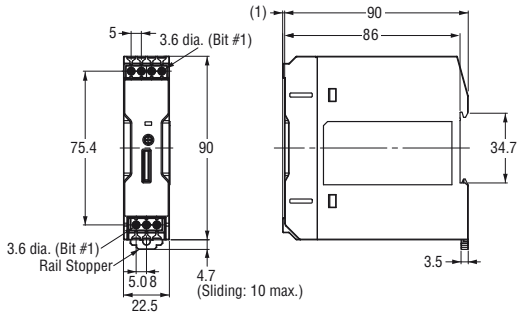

S8VK-G12024 (120 W)

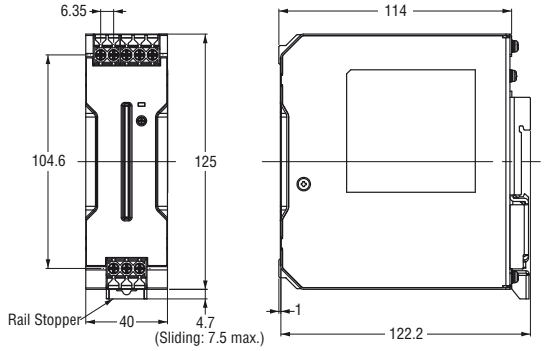

S8VK-G030□□ (30 W)

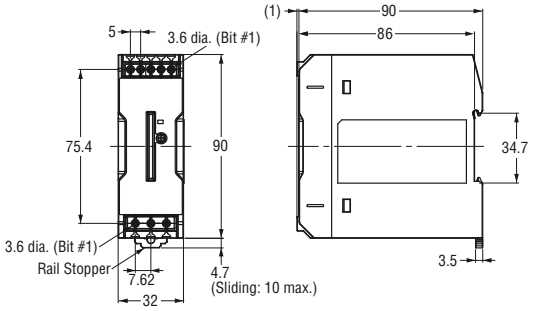

S8VK-G240□□ (240 W)

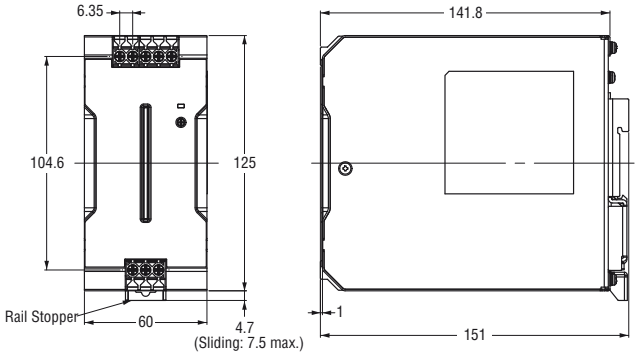

S8VK-G060□□ (60 W)

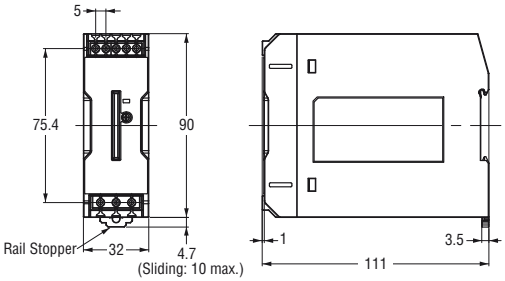

S8VK-G480□□ (480 W)

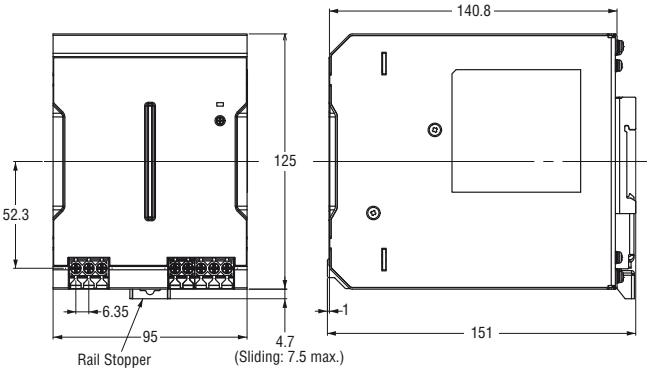

S8VK-C Nomenclature

60-W/120-W/240-W Models S8VK-C06024/S8VK-C12024/S8VK-C24024	480-W Model S8VK-C48024

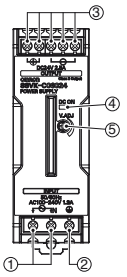

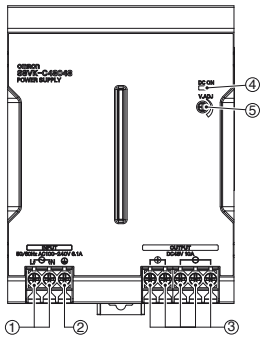

Note: The S8VK-C06024 is shown above.

No.	Name	Function
1	Input terminals (L), (N)	Connect the input lines to these terminals. *1
2	Protective Earth terminal (PE)	Connect the ground line to this terminal. *2
3	DC Output terminals (–V), (+V)	Connect the load lines to these terminals.
4	Output indicator (DC ON: Green)	Lights while a direct current (DC) output is ON.
5	Output voltage adjuster (V.ADJ)	Use to adjust the voltage.

*1. The fuse is located on the (L) side. It is not user-replaceable. For a DC input, connect the positive voltage to the L terminal.
*2. This is the protective earth terminal specified in the safety standards. Always ground this terminal.

S8VK-C Dimensions

(Unit: mm)

S8VK-C06024 (60 W)

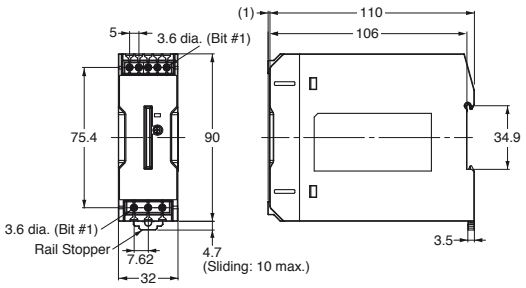

S8VK-C24024 (240 W)

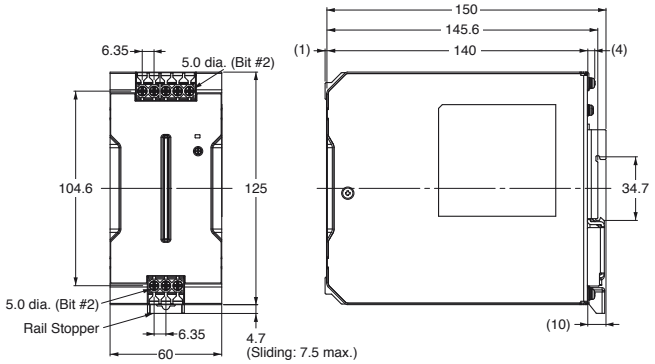

S8VK-C12024 (120 W)

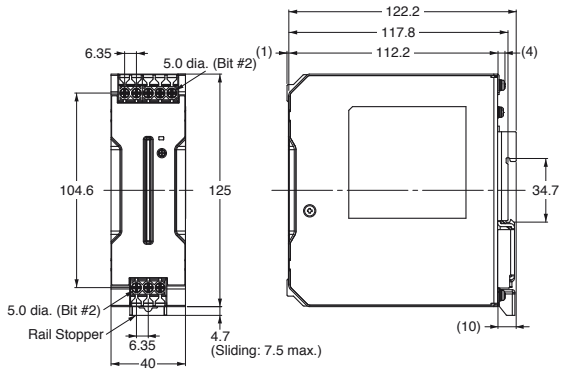

S8VK-C48024 (480 W)

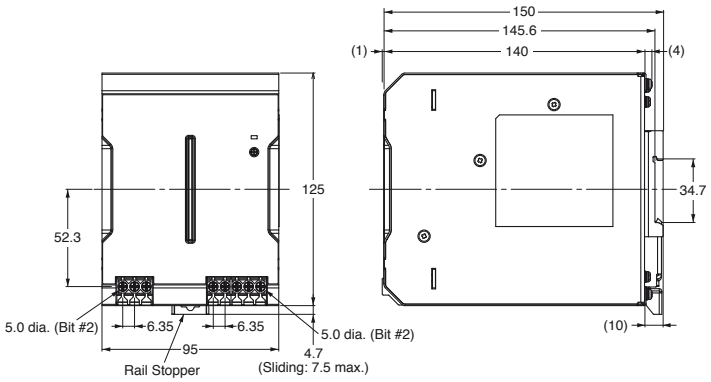

S8VK-T Nomenclature

120-W/240-W Models S8VK-T12024/S8VK-T24024	480-W Model S8VK-T48024	960-W Model S8VK-T96024

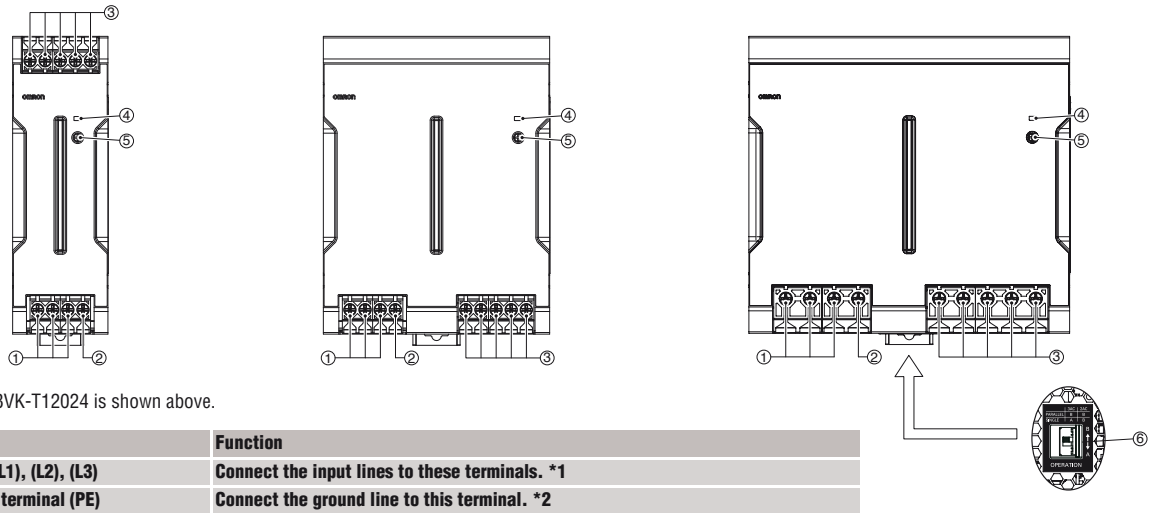

Note: The S8VK-T12024 is shown above.

No.	Name	Function
1	Input terminals (L1), (L2), (L3)	Connect the input lines to these terminals. *1
2	Protective Earth terminal (PE)	Connect the ground line to this terminal. *2
3	DC Output terminals (–V), (+V)	Connect the load lines to these terminals.
4	Output indicator (DC ON: Green)	Lights while a direct current (DC) output is ON.
5	Output voltage adjuster (V.ADJ)	Use to adjust the voltage.
6	Operation Switch *3*4	To operate in parallel or 2-phase input, set the switch to the "B" side. (960 W model only).

*1. For wiring, refer to page 13 of the S8VK-T Datasheet (Cat. No. T061).
*2. This is the protective earth terminal specified in the safety standards. Always ground this terminal.
*3. For parallel operation, refer to page 15 of the S8VK-T Datasheet (Cat. No. T061).
*4. For 2-phase input, refer to page 15 of the S8VK-T Datasheet (Cat. No. T061).

S8VK-T Dimensions

(Unit: mm)

S8VK-T12024 (120 W)

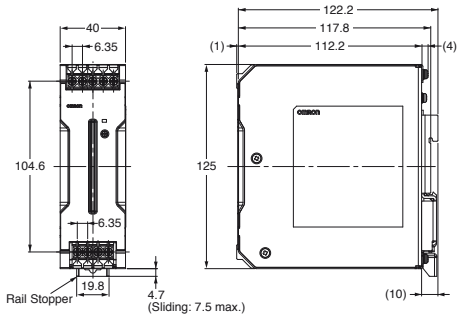

S8VK-T48024 (480 W)

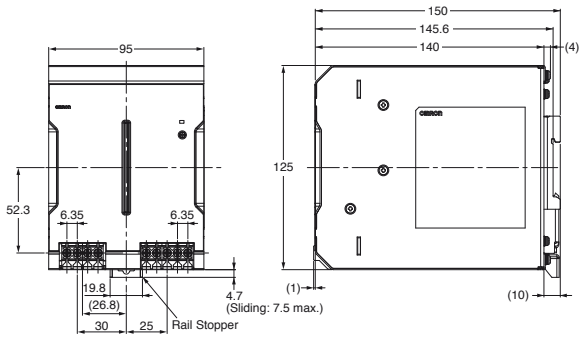

S8VK-T24024 (240 W)

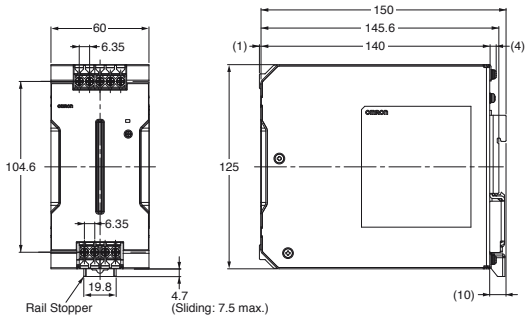

S8VK-T96024 (960 W)

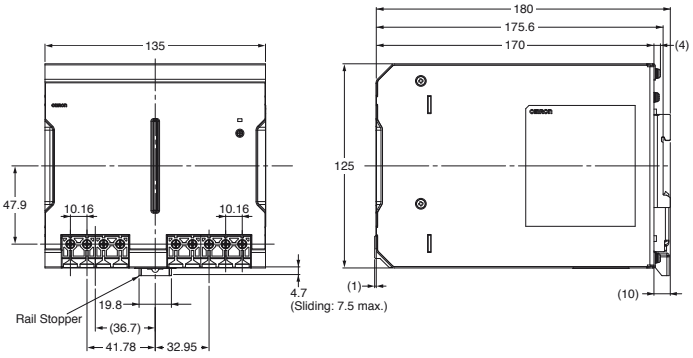

S8VK-R Nomenclature

10 A Model S8VK-R10	20 A Model S8VK-R20

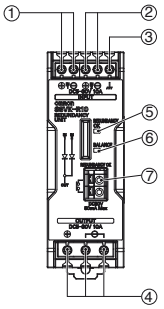

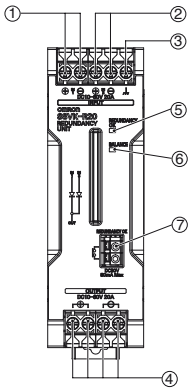

No.	Name	Function
1	Input terminal 1	Connect the input 1 lines to these terminals.
2	Input terminal 2	Connect the input 2 lines to these terminals.
3	⏚ terminal	This is not a ground terminal. There are no functional or safety concerns even if you do not connect it to ground.
4	Output terminal	Connect the load lines to these terminals.
5	Status indicator (redundancy OK: Green)	Lighting: Voltage difference between Vin1 and Vin2 is less than 2.4 V typ.
6	Status indicator (voltage balance: Green)	Lighting: Voltage difference between Vin1 and Vin2 is less than 50 mV typ.
7	Status contact (redundancy OK: photo switch)	Photo switch contact ON: Voltage difference between Vin1 and Vin2 is less than 2.4 V typ.

S8VK-R Dimensions

(Unit: mm)

S8VK-R10

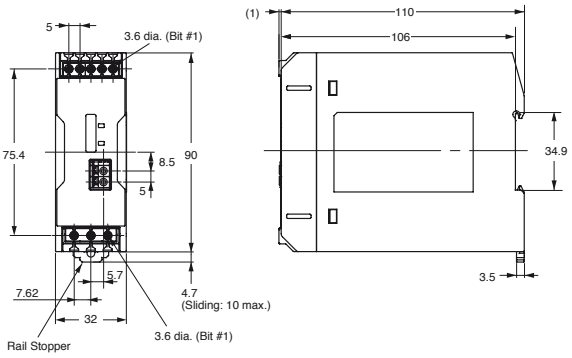

S8VK-R20

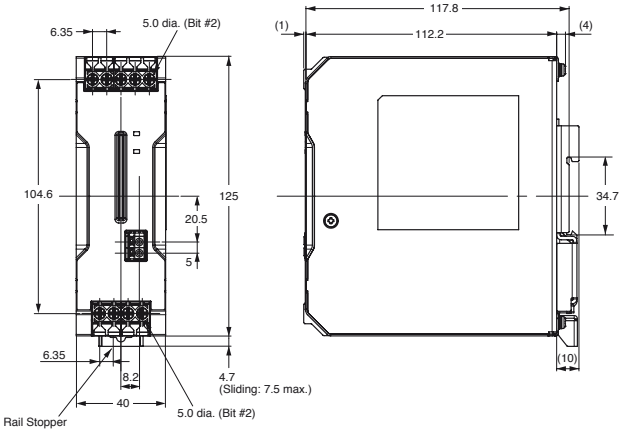

Note: Refer to the S8VK-G Datasheet (Cat. No. T056) for details.
Refer to the S8VK-C Datasheet (Cat. No. T058) for details.
Refer to the S8VK-R Datasheet (Cat. No. T059) for details.
Refer to the S8VK-T Datasheet (Cat. No. T061) for details.

OMRON Corporation **Industrial Automation Company**
Tokyo, JAPAN
Contact: www.ia.omron.com

Regional Headquarters
OMRON EUROPE B.V.
Wegalaan 67-69-2132 JD Hoofddorp
The Netherlands
Tel: (31)2356-81-300/Fax: (31)2356-81-388

OMRON ELECTRONICS LLC
One Commerce Drive Schaumburg,
IL 60173-5302 U.S.A.
Tel: (1) 847-843-7900/Fax: (1) 847-843-7787

OMRON ASIA PACIFIC PTE. LTD.
No. 438A Alexandra Road # 05-05/08 (Lobby 2),
Alexandra Technopark,
Singapore 119967
Tel: (65) 6835-3011/Fax: (65) 6835-2711

OMRON (CHINA) CO., LTD.
Room 2211, Bank of China Tower,
200 Yin Cheng Zhong Road,
PuDong New Area, Shanghai, 200120, China
Tel: (86) 21-5037-2222/Fax: (86) 21-5037-2200

Authorized Distributor:

© OMRON Corporation 2013-2014 All Rights Reserved.
In the interest of product improvement,
specifications are subject to change without notice.

CSM_2_3_0314
Cat. No. T057-E1-05
Printed in Japan
0314(0213)