Technical data sheet

Surge arrestor V20, 1-pole, 280 V

Art.-Nr. 5095161

Surge arrestor, type 2

- For surge voltage protection equipotential bonding to VDE 0100-443 (IEC 60364-4-44)
- Discharge capacity to 40 kA (8/20) per pole through high-performance varistors
- Modular connectable arrestor with cut-off unit and visual status display
- Locking mechanism with vibration protection and voltage keying
- Plastic to UL 94 V-0
- The remote signalling variants (FS) have a potential-free changeover contact for remote signalling

Application: Equipotential bonding in main and sub-distributions.

Type 2 LPZ 1→2

Dimensions

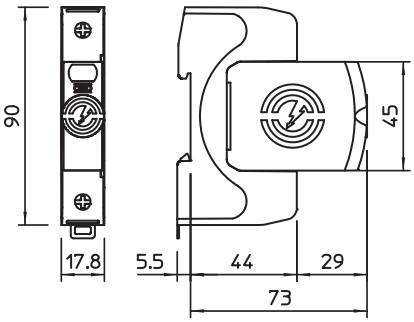

Master data

Item no.	5095161
Type	V20-1-280
Description 1	SurgeController V20
Description 2	1-pole
Dimension	280V
Smallest sales unit	1,00 Piece
Weight	12,90 kg/100 pc.

Technical data sheet

Surge arrestor V20, 1-pole, 280 V

Art.-Nr. 5095161

Technical data

SPD to EN 61643-11	Type 2
SPD to IEC 61643-11	Class II
SPD to UL 1449	Type 4
Test class, type 2	☑
Nominal voltage AC (50/60 Hz)	230,00 V
Maximum continuous voltage AC	280,00 V
Maximum continuous voltage (L-N)	280,00 V
Nominal discharge current (8/20 µs)	20,00 kA
Nominal discharge current (8/20 µs) [L-N]	20,00 kA
Maximum discharge current (8/20 µs)	40,00 kA
Maximum discharge current (8/20 µs) [L-N]	40,00 kA
Arrestor surge current (8/20 µs) [total]	40,00 kA
Protection level	1,30 kV
Protection level [L-N]	1,30 kV
Residual voltage [L-N] @ 1 kA	0,8 kV
Residual voltage [L-N] @ 5 kA	1,0 kV
Response time	25 ns
Response time [L-N]	25 ns
Max. mains-side overcurrent protection	160 A gL/gG
Short-circuit withstand for max. mains-side overcurrent protec-tion	50 kA eff
Short-circuit resistant	☑
TOV voltage [L-N] – fail safe mode – 120 min.	440,00 V
TOV voltage [L-N] – withstand mode – 5 s	335,00 V
Operating temperature range	-40-+80 °C
Humidity	5,00 - 95,00 %
Function/defect display	Optical
Ports	One-Port SPD
Pole version	1
Pole number	1,00
Connection cross-section (min.)	1,50 mm²
Connection cross-section (max.)	35,00 mm²
Connection cross-section (min.)	16,00 AWG
Connection cross-section (max.)	2,00 AWG
Torque	4,00 Nm
Torque	35,00 Lbs
Mounting type	Hat rail 35 mm
Housing material	PA UL 94 V-0
Installation location	Interior
Protection rating	IP20
Installation dimensions (LxWxH)	90x17,8x78,5 mm
Minimum distance	1,50 mm

Technical data sheet

Surge arrestor V20, 1-pole, 280 V

Art.-Nr. 5095161

Technical data

Approvals	UL
	UL
	ÖVE
	ÖVE
	VDE
	VDE
	KEMA
	KEMA
Protective conductor current	< 250 µA
Blow-out	□
Size	1 part unit
Remote signalling	□
Integrated back-up fuse	□
Max. cable cross-section flexible (fine-wire)	35,00 mm²
Max. cable cross-section rigid (single wire/multi-wire)	35,00 mm²
Conductor cross-section, flexible (fine-wire)	1,50 - 35,00 mm²
Conductor cross-section, flexible (fine-wire)	16,00 - 2,00 AWG
Conductor cross-section, rigid (single wire/multi-wire)	16,00 - 2,00 AWG
Conductor cross-section, rigid (single wire/multi-wire)	1,50 - 35,00 mm²
Signalling on device	Visual