Catalogue No: **CT8-B63**

OVERLOAD THERMAL 4.5-6.3A

Motor Control and Drives > Motor Starting and Protection > Motor Protection > Sprecher + Schuh Overloads > Thermal (Bi-Metallic) Overloads > CT8 Thermal Overloads

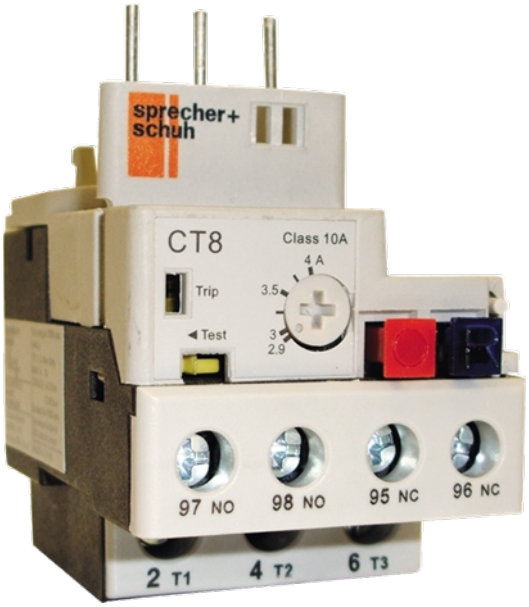

Representative Photo Only
(actual product may vary based on configuration selections)

Mini Thermal Overload Relay, 4.5...6.3A, 3kW, for use with CA 8-9, Trip Class 10A, Auto/Manual Reset

- Consistent and reliable protection for peace of mind
- Differential release for phase loss sensitivity and protection of motors in phase loss conditions
- Ambient temperature compensation from -20°C to +60°C for consistent performance

SPECIFICATIONS	
Component Type Motor Control and Drives	Thermal Overload
Adjustment	1.5 : 1
Current Range (A)	4.50...6.30
Approx kW	3.00
Details, Contactor	CA8-5...12
Trip Class	10A
Reset	Automatic / Manual
Contact Configuration	1 NO + 1 NC
Test Function	Yes
Visible Trip Indicator	Yes
Motor FLC, Max	6.3 A, max
Motor FLC, Min	4.5 A, min
Rated Operation Voltage	690 V AC

REFERENCES	
IECEx Certificate	-
Supplier Declaration of Conformity:	-
Installation Guide:	-
User Manual:	-
Manufacturer Datasheet:	-
Manufacturer Catalogue & Product Selection:	-

Catalogue No: **CT8-B63**

OVERLOAD THERMAL 4.5-6.3A

Motor Control and Drives > Motor Starting and Protection > Motor Protection > Sprecher + Schuh Overloads > Thermal (Bi-Metallic) Overloads > CT8 Thermal Overloads

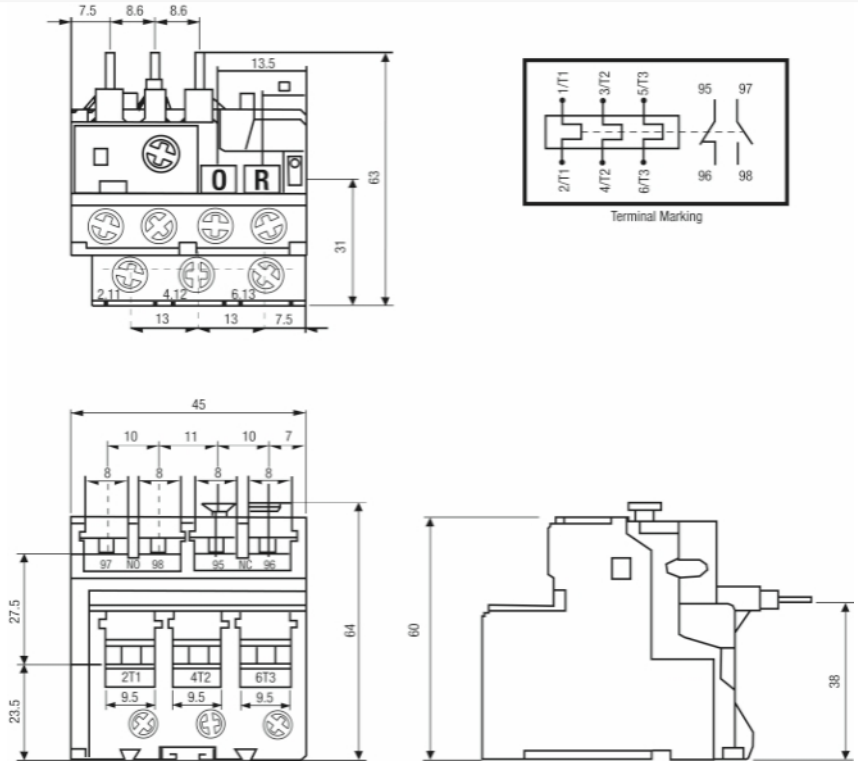

Dimension Diagram

Connection Diagrams

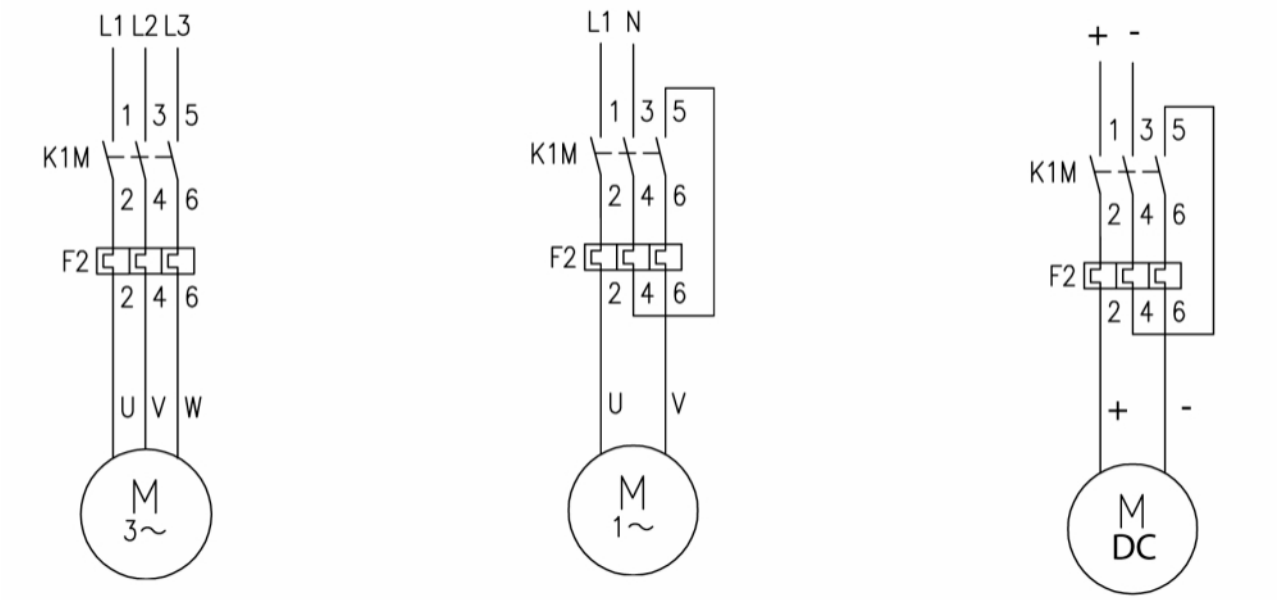

Connection / Wiring Diagram