Catalogue No: **CT7N-23-B13**

OVERLOAD THERMAL 0.9-1.3A FOR CA7-9/23

Motor Control and Drives > Motor Starting and Protection > Motor Protection > Sprecher + Schuh Overloads > Thermal (Bi-Metallic) Overloads > CT7N Thermal Overloads

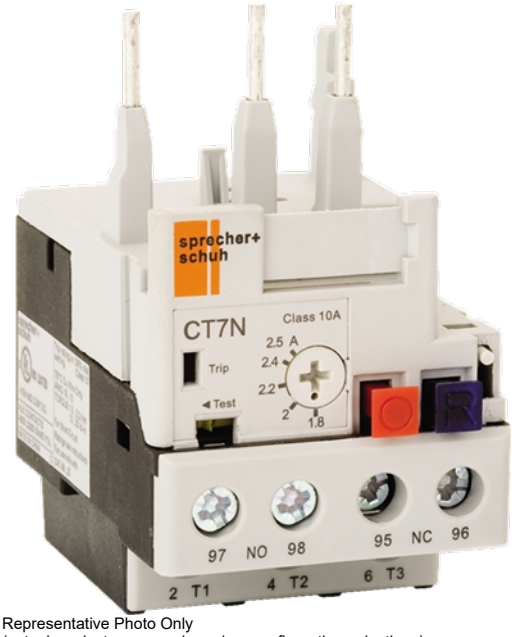

Representative Photo Only
(actual product may vary based on configuration selections)

Thermal Overload Relay, 0.9...1.3A, for use with CA7-9...23, Trip Class 10A, Auto/Manual Reset

- Consistent and reliable protection for peace of mind
- Differential release for phase loss sensitivity and protection of motors in phase loss conditions
- Ambient temperature compensation from -20°C to +60°C for consistent performance

SPECIFICATIONS	
Component Type Motor Control and Drives	Thermal Overload
Adjustment	1.5 : 1
Current Range (A)	0.9...1.3
Details, Contactor	CA7-9...23
Trip Class	10A
Reset	Automatic / Manual
Contact Configuration	1 NO + 1 NC
Test Function	Yes
Visible Trip Indicator	Yes
Motor FLC, Max	1.3 A, max
Motor FLC, Min	0.9 A, min
Rated Operation Voltage	690 V AC

REFERENCES	
IECEx Certificate	-
Supplier Declaration of Conformity:	-
Installation Guide:	-
User Manual:	-
Manufacturer Datasheet:	-
Manufacturer Catalogue & Product Selection:	-

Catalogue No: **CT7N-23-B13**

OVERLOAD THERMAL 0.9-1.3A FOR CA7-9/23

Motor Control and Drives > Motor Starting and Protection > Motor Protection > Sprecher + Schuh Overloads > Thermal (Bi-Metallic) Overloads > CT7N Thermal Overloads

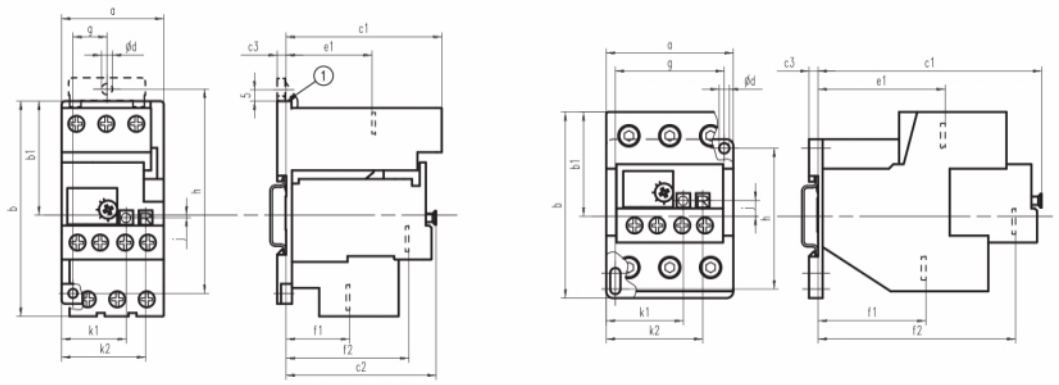

Overload + DIN Rail/ Panel Mounting Adapter	a	b	b1	c1	c2	c3	ød	e1	f1	f2	g	h	k1	k2
CT7N-23-A16...C25 + CT7N-37-P-A CT7N-37-C20...C25 + CT7N-37-P-A	45	89.5	50	68.5	66	4	4.5	38	26	54	15	90	29	37.5
CT7N-37-C30...C38 + CT7N-37-P-A	45	91.5	50	68.5	66	4	4.5	38	28	54	15	90	29	37.5
CT7N-85-C47P...C90P +	56	82	46	99.5	~	4	4.5	56	47.5	87	~	60	41.5	50

Dimension Diagram

Connection Diagrams

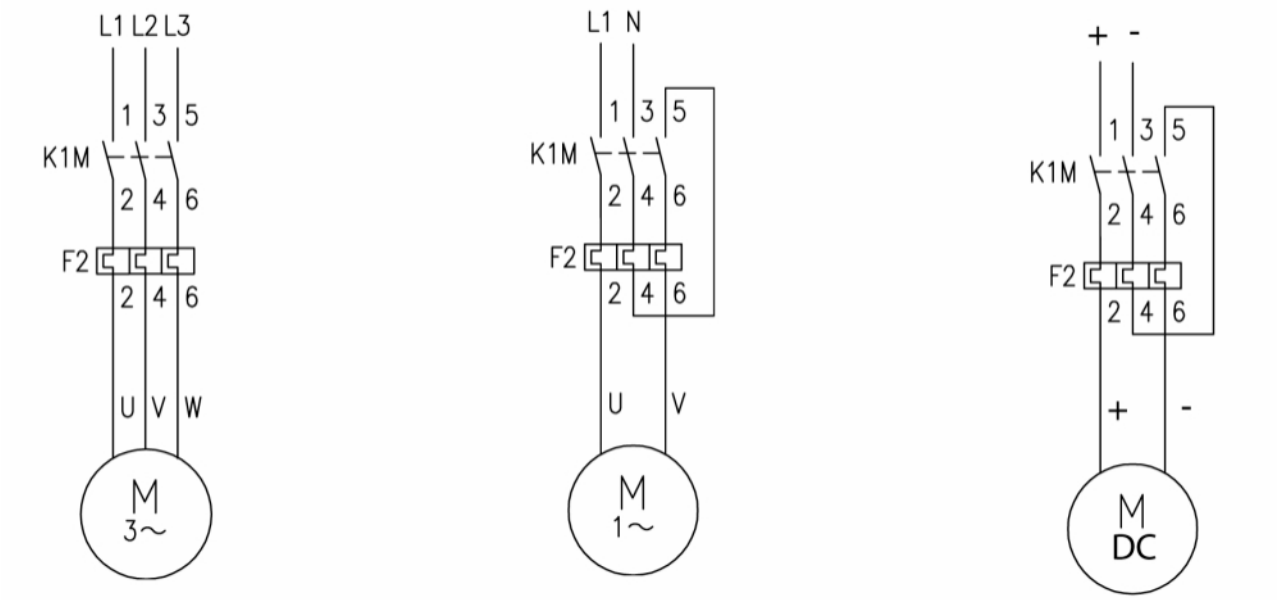

Connection / Wiring Diagram