Catalogue No: **T1.60.60**

CABLE DUCT STANDARD SLOT W60 x H60 x L2000mm

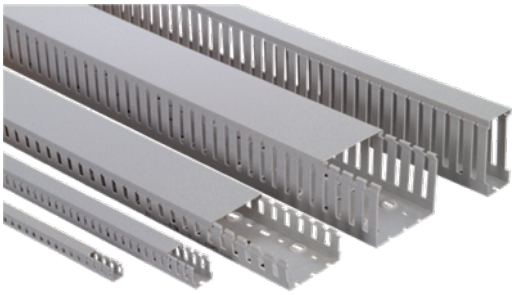

Representative Photo Only
(actual product may vary based on configuration selections)

Cable Duct PVC Slot W60xH60

The wire retainers with predetermined break-lines T1 slotted and T1E narrow slotted range has been widely accepted for its versatility and ability to withstand harsh conditions and environments. Ideal for small to medium size wiring jobs, this specially formulated PVC allows repeated opening and closing on the duct fingers without breaking. Where the ducting catches alight in the case of fire, the PVC properties of the cable ducting will allow the flame to extinguish. - Rigid PVC, RAL 7030 Grey - Self extinguishing - Complete with cover - High quality no-slip cover design - Standard lengths of 2 metres

SPECIFICATIONS	
Product Series	T1
Component Type Termination Wiring	Cable Duct
Finger Wall Width	12 mm
Slot Opening Width	8 mm
Height with Cover	60 mm with cover
Glow Wire Rating	IEC 60695-2-1 960°C
Flammability Rating (UL94)	UL 94 V-0
VICAT Temperature	84 °C
Heat Deflection Temperature (HDT)	72 °C
Dielectric Strength	70 KV/mm
Material	PVC
Colour	Stone Grey (RAL 7030)
Width	60 mm
Length	2000 mm
Package Quantity	1 qty
Standards Compliance	DIN EN ISO 1183 DIN EN ISO 306 DIN 52612 IEC 60243 IEC 60093
Certifications	CE CSA UR

Catalogue No: **T1.60.60**

CABLE DUCT STANDARD SLOT W60 x H60 x L2000mm

Termination and Wiring Systems > Cable Management > Cable Ducting and DIN Rail > Cable Duct > PVC Cable Duct > Standard Slotted Duct - T1

REFERENCES	
IECEx Certificate	-
Supplier Declaration of Conformity:	-
Installation Guide:	-
User Manual:	-
Manufacturer Datasheet:	T16060_Manufacturer Datasheet
Manufacturer Catalogue & Product Selection:	T16060_Manufacturer Catalogue

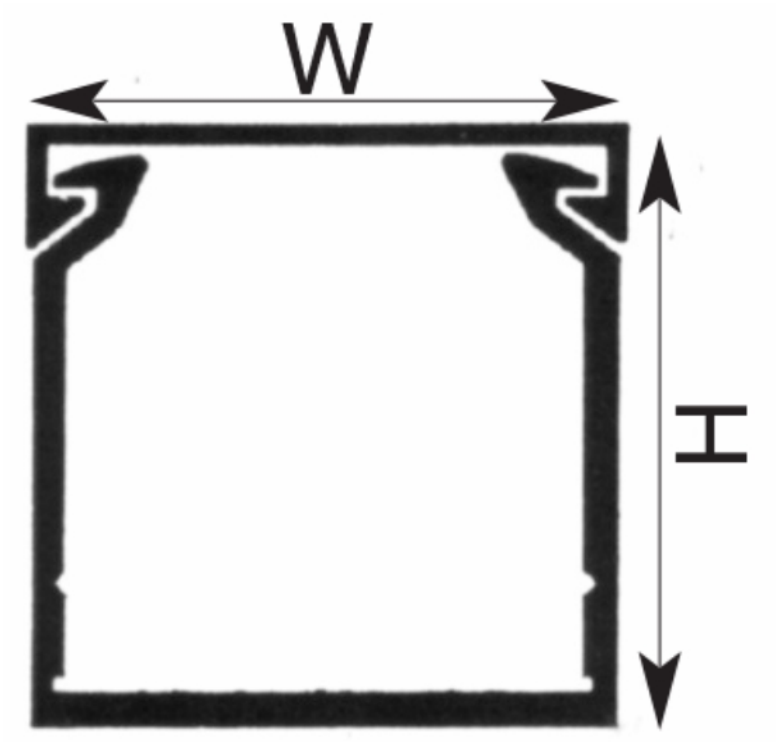

Dimension Diagram

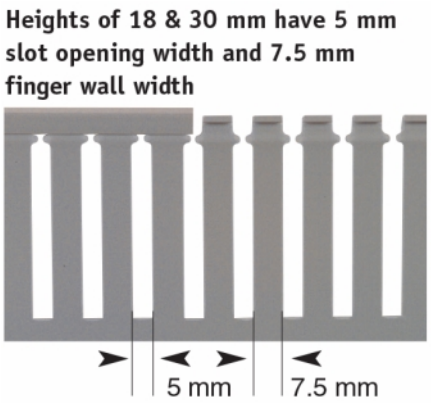

Technical Diagram