Catalogue No: **PC C 85 T**

TERMINAL BOX PICCOLO PC IP66/67 H80 x W140 x D85mm CLEAR

Enclosures and Climate Control > Standard Enclosures > Terminal Boxes > Thermoplastic Terminal Boxes > Piccolo Range > Piccolo PC Enclosures with Transparent Cover (Mounting Plates Sold Separately)

Representative Photo Only
(actual product may vary based on configuration selections)

Enclosure Terminal Box Piccolo PC IP66/67 Clear W140xH80xD85mm

- IP66/67 rated, PC: IK08 ABS: IK07
- Halogen free, impact resistant Polycarbonate or ABS
- Totally insulated, polyurethane gasket and polyamide screws
- Grey RAL 7035 coloured base with option of transparent or grey cover
- RoHS compliant

SPECIFICATIONS	
Product Series	Piccolo
Material, Body / Housing	PC (Polycarbonate) material
Height	80 mm
Width	140 mm
Depth	85 mm
IK Rating	IK08
IP Rating	IP66 IP67
Colour, Body / Housing	Light Grey (RAL 7035) colour
Colour, Cover	Clear / Transparent colour
Electrical Insulation	Totally insulated
Halogen Free	Yes
UV Rating	UL 508
Flammability Rating (UL94)	UL 746C
Glow Wire Rating	IEC 60695-2-1 960°C
Material, Gasket / Seal	PUR / PU material
Material, Screws / Fastening	Polyamide Screws/Fastening
Standards Compliance	EN 60529 EN 60950 EN 62208:2003 EN 62262 UL 508 UL 746C IEC 60695-2-1 960°C
Certifications	GOST-R RoHS

Catalogue No: **PC C 85 T**

TERMINAL BOX PICCOLO PC IP66/67 H80 x W140 x D85mm CLEAR

Enclosures and Climate Control > Standard Enclosures > Terminal Boxes > Thermoplastic Terminal Boxes > Piccolo Range > Piccolo PC Enclosures with Transparent Cover (Mounting Plates Sold Separately)

REFERENCES	
IECEx Certificate	-
Supplier Declaration of Conformity:	-
Installation Guide:	-
User Manual:	-
Manufacturer Datasheet:	-
Manufacturer Catalogue & Product Selection:	-

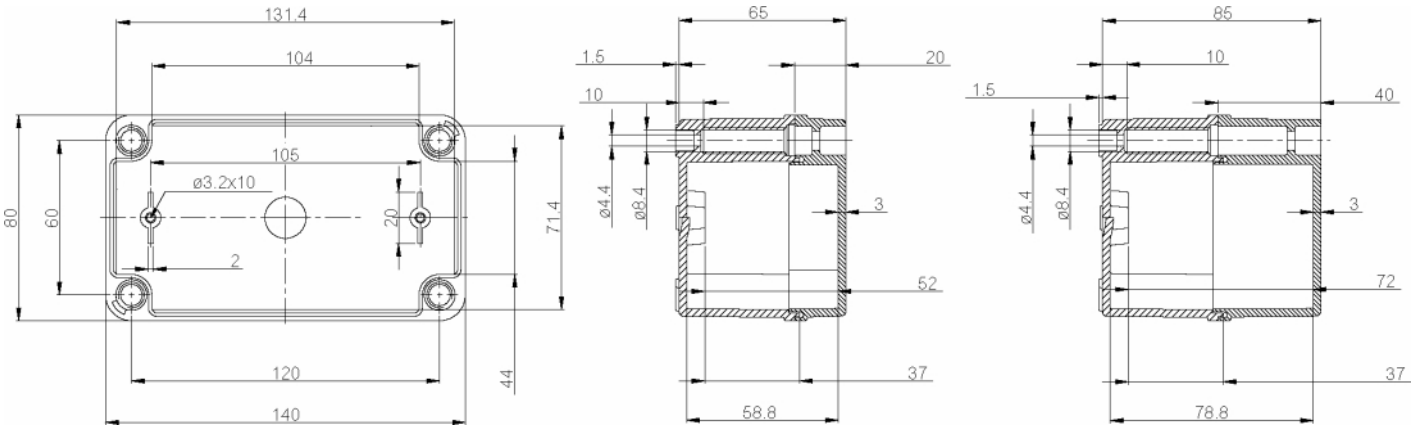

Dimension Diagram