Catalogue No: **PC C 85 G**

TERMINAL BOX PICCOLO PC IP66/67 H80 x W140 x D85mm GREY

Enclosures and Climate Control > Standard Enclosures > Terminal Boxes > Thermoplastic Terminal Boxes > Piccolo Range > Piccolo PC Enclosures with Grey Cover (Mounting Plates Sold Separately)

Representative Photo Only
(actual product may vary based on configuration selections)

Enclosure Terminal Box Piccolo PC IP66/67 Grey W140xH80xD85mm

- IP66/67 rated, PC: IK08 ABS: IK07
- Halogen free, impact resistant Polycarbonate or ABS
- Totally insulated, polyurethane gasket and polyamide screws
- Grey RAL 7035 coloured base with option of transparent or grey cover
- RoHS compliant

SPECIFICATIONS	
Product Series	Piccolo
Material, Body / Housing	PC (Polycarbonate) material
Height	80 mm
Width	140 mm
Depth	85 mm
Depth, Base	45 mm
IK Rating	IK08
IP Rating	IP66 IP67
Colour, Body / Housing	Light Grey (RAL 7035) colour
Colour, Cover	Grey colour
Electrical Insulation	Totally insulated
Halogen Free	Yes
UV Rating	UL 508
Flammability Rating (UL94)	UL 746C
Glow Wire Rating	IEC 60695-2-1 960°C
Material, Gasket / Seal	PUR / PU material
Material, Screws / Fastening	Polyamide Screws/Fastening
Standards Compliance	EN 60529 EN 60950 EN 62208:2003 EN 62262 UL 508 UL 746C IEC 60695-2-1 960°C
Certifications	GOST-R RoHS

Catalogue No: **PC C 85 G**

TERMINAL BOX PICCOLO PC IP66/67 H80 x W140 x D85mm GREY

Enclosures and Climate Control > Standard Enclosures > Terminal Boxes > Thermoplastic Terminal Boxes > Piccolo Range > Piccolo PC Enclosures with Grey Cover (Mounting Plates Sold Separately)

REFERENCES	
IECEx Certificate	-
Supplier Declaration of Conformity:	-
Installation Guide:	-
User Manual:	-
Manufacturer Datasheet:	-
Manufacturer Catalogue & Product Selection:	-

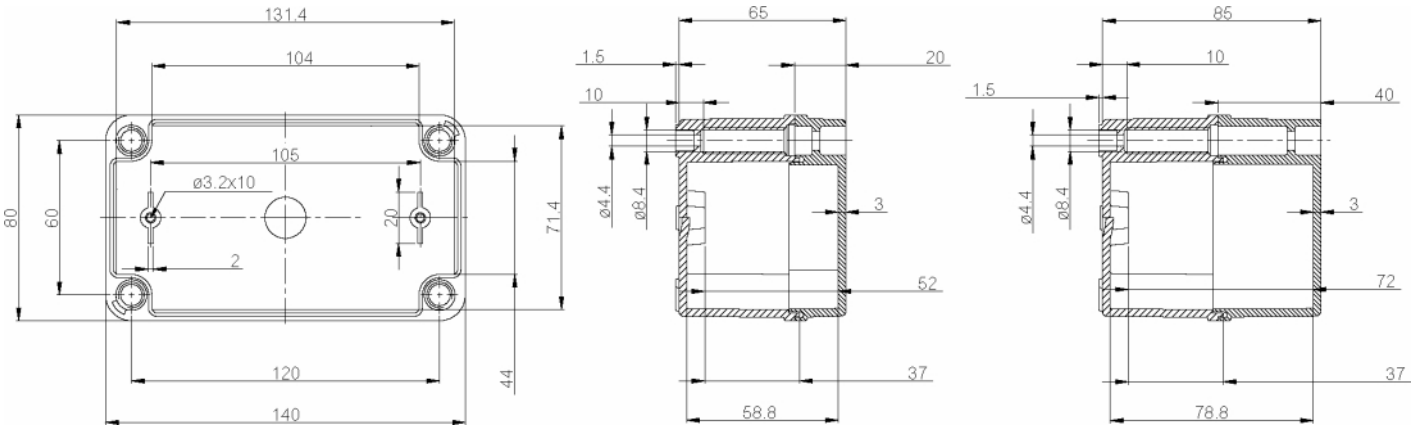

Dimension Diagram