Catalogue No: **PC B 85 G**

# TERMINAL BOX PICCOLO PC IP66/67 H80 x W110 x D85mm GREY

Enclosures and Climate Control > Standard Enclosures > Terminal Boxes > Thermoplastic Terminal Boxes > Piccolo Range > Piccolo PC Enclosures with Grey Cover (Mounting Plates Sold Separately)

Representative Photo Only
(actual product may vary based on configuration selections)

Enclosure Terminal Box Piccolo PC IP66/67 Grey W110xH80xD85mm

- IP66/67 rated, PC: IK08 ABS: IK07
- Halogen free, impact resistant Polycarbonate or ABS
- Totally insulated, polyurethane gasket and polyamide screws
- Grey RAL 7035 coloured base with option of transparent or grey cover
- RoHS compliant

| SPECIFICATIONS | |
|---|---|
| Product Series | Piccolo |
| Material, Body / Housing | PC (Polycarbonate) material |
| Height | 80 mm |
| Width | 110 mm |
| Depth | 85 mm |
| Depth, Base | 45 mm |
| IK Rating | IK08 |
| IP Rating | IP66<br>IP67 |
| Colour, Body / Housing | Light Grey (RAL 7035) colour |
| Colour, Cover | Grey colour |
| Electrical Insulation | Totally insulated |
| Halogen Free | Yes |
| UV Rating | UL 508 |
| Flammability Rating (UL94) | UL 746C |
| Glow Wire Rating | IEC 60695-2-1 960°C |
| Material, Gasket / Seal | PUR / PU material |
| Material, Screws / Fastening | Polyamide Screws/Fastening |
| Standards Compliance | EN 60529<br>EN 60950<br>EN 62208:2003<br>EN 62262<br>UL 508<br>UL 746C<br>IEC 60695-2-1 960°C |
| Certifications | GOST-R<br>RoHS |

Catalogue No: **PC B 85 G**

TERMINAL BOX PICCOLO PC IP66/67 H80 x W110 x D85mm GREY

Enclosures and Climate Control > Standard Enclosures > Terminal Boxes > Thermoplastic Terminal Boxes > Piccolo Range > Piccolo PC Enclosures with Grey Cover (Mounting Plates Sold Separately)

| REFERENCES | |
|---|---|
| IECEx Certificate | - |
| Supplier Declaration of Conformity: | - |
| Installation Guide: | - |
| User Manual: | - |
| Manufacturer Datasheet: | - |
| Manufacturer Catalogue & Product Selection: | - |

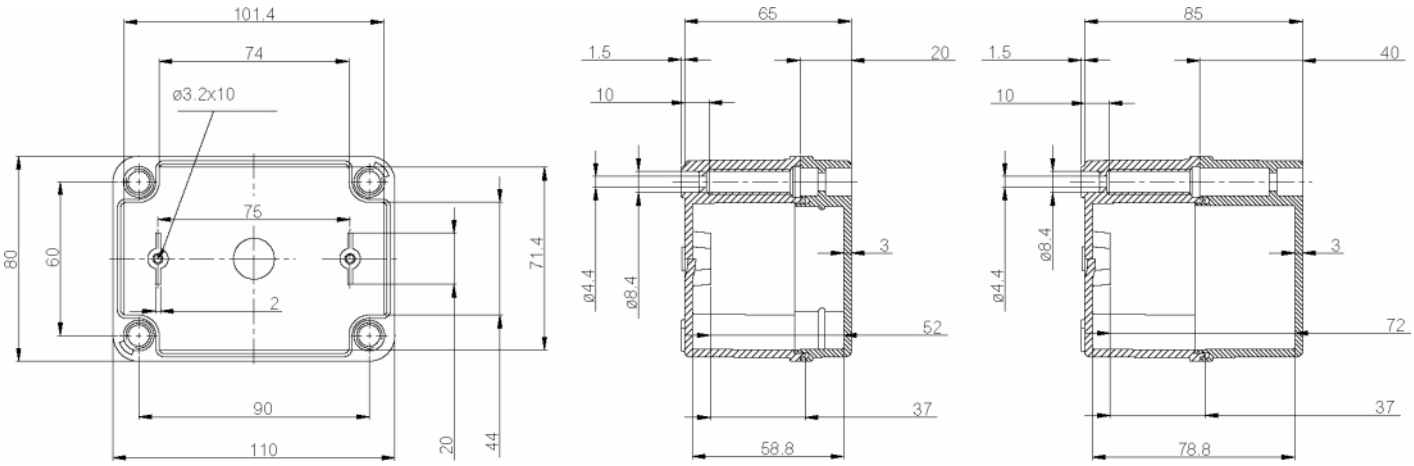


Dimension Diagram