600W Single Output Power Supply

SE-600 series

User's Manual

Features :

- AC input active surge current limiting
- AC input range selected by switch
- Protections:Short circuit / Overload / Over voltage / Over temperature
- Forced air cooling by built-in DC fan
- High power density 4.9w/in^3
- Built-in remote sense function
- UL approved
- Low cost
- 2 years warranty

GTIN CODE

MW Search: https://www.meanwell.com/serviceGTIN.aspx

IS 15885(Part 2/Sec13) R-41027766 (except for 48V) CB IEC62368-1 K60950-1 (for 12V,24V only) R33100 RoHS EAC c UL us CE (Note.5) UK CA

SPECIFICATION

MODEL		SE-600-5	SE-600-12	SE-600-15	SE-600-24	SE-600-27	SE-600-36	SE-600-48
OUTPUT	DC VOLTAGE	5V	12V	15V	24V	27V	36V	48V
	RATED CURRENT	100A	50A	40A	25A	22.2A	16.6A	12.5A
	CURRENT RANGE	0 ~ 100A	0 ~ 50A	0 ~ 40A	0 ~ 25A	0 ~ 22.2A	0 ~ 16.6A	0 ~ 12.5A
	RATED POWER	500W	600W	600W	600W	599.4W	597.6W	600W
	RIPPLE & NOISE (max.) Note.2	150mVp-p	150mVp-p	150mVp-p	150mVp-p	150mVp-p	200mVp-p	200mVp-p
	VOLTAGE ADJ. RANGE	4.75 ~ 5.5V	10 ~ 13.5V	13.5 ~ 16.5V	22 ~ 26.4V	24 ~ 30V	32 ~ 40V	43 ~ 56V
	VOLTAGE TOLERANCE Note.3	±2.0%	±1.0%	±1.0%	±1.0%	±1.0%	±1.0%	±1.0%
	LINE REGULATION	±0.5%	±0.5%	±0.5%	±0.5%	±0.5%	±0.5%	±0.5%
	LOAD REGULATION	±2.0%	±0.5%	±0.5%	±0.5%	±0.5%	±0.5%	±0.5%
	SETUP, RISE TIME	1000ms, 50ms/230VAC 1000ms, 50ms/115VAC at full load						
	HOLD UP TIME (Typ.)	20ms/230VAC 16ms/115VAC at full load						
INPUT	VOLTAGE RANGE	90 ~ 132VAC / 180 ~ 264VAC selected by switch 254 ~ 370VDC						
	FREQUENCY RANGE	47 ~ 63Hz						
	EFFICIENCY (Typ.)	78%	83%	84%	87%	87%	87%	88%
	AC CURRENT (Typ.)	12A/115VAC 7.5A/230VAC						
	INRUSH CURRENT (Typ.)	30A/115VAC 60A/230VAC						
	LEAKAGE CURRENT	<2.0mA / 240VAC						
PROTECTION	OVERLOAD	105 ~ 125% rated output power						
		Protection type : Shut down o/p voltage, re-power on to recover						
	OVER VOLTAGE	5.75 ~ 6.3V	13.8 ~ 16.2V	18 ~ 21V	27.6 ~ 32.4V	31 ~ 36.5V	42 ~ 50V	57.6 ~ 67.2V
		Protection type : Shut down o/p voltage, re-power on to recover						
	OVER TEMPERATURE	85℃±5℃ (TSW1) detect on heatsink of power transistor						
		Protection type : Shut down o/p voltage, recovers automatically after temperature goes down						
ENVIRONMENT	WORKING TEMP.	-20 ~ +60℃ (Refer to output load derating curve)						
	WORKING HUMIDITY	20 ~ 90% RH non-condensing						
	STORAGE TEMP., HUMIDITY	-40 ~ +85℃, 10 ~ 95% RH						
	TEMP. COEFFICIENT	±0.05%/℃ (0 ~ 50℃)						
	VIBRATION	10 ~ 500Hz, 2G 10min./1cycle, 60min. each along X, Y, Z axes						
SAFETY & EMC	SAFETY STANDARDS	CB IEC62368-1, UL60950-1,UL62368-1, EAC TP TC 004, BSMI CNS14336-1, KC K60950-1(for 12V,24V only), IS13252(Part1)/IEC60950-1(except for 48V) approved; Design refer to BS EN/EN62368-1						
	WITHSTAND VOLTAGE	I/P-O/P:3KVAC I/P-FG:1.5KVAC O/P-FG:0.5KVAC						
	ISOLATION RESISTANCE	I/P-O/P, I/P-FG, O/P-FG:100M Ohms/500VDC						
OTHERS	MTBF	1529.1K hrs min. Telcordia TR/SR-332 (Bellcore) ; 204.2K hrs min. MIL-HDBK-217F (25℃)						
	DIMENSION	247*127*63.5mm (L*W*H)						
	PACKING	2.1Kg; 6pcs/13.4Kg/1.03CUFT						

NOTE

1. All parameters NOT specially mentioned are measured at 230VAC input, rated load and 25℃ of ambient temperature.
2. Ripple & noise are measured at 20MHz of bandwidth by using a 12" twisted pair-wire terminated with a 0.1uf & 47uf parallel capacitor.
3. Tolerance : includes set up tolerance, line regulation and load regulation.
4. The ambient temperature derating of 3.5℃/1000m with fanless models and of 5℃/1000m with fan models for operating altitude higher than 2000m(6500ft).
5. This power supply does not meet the harmonic current requirements outlined by BS EN/EN61000-3-2. Please do not use this power supply under the following conditions:
   a) the end-devices is used within the European Union, and
   b) the end-devices is connected to public mains supply with 220Vac or greater rated nominal voltage, and
   c) the power supply is:
   - installed in end-devices with average or continuous input power greater than 75W, or
   - belong to part of a lighting system
   Exception:
   Power supplies used within the following end-devices do not need to fulfill BS EN/EN61000-3-2
   a) professional equipment with a total rated input power greater than 1000W;
   b) symmetrically controlled heating elements with a rated power less than or equal to 200W

※ Product Liability Disclaimer : For detailed information, please refer to https://www.meanwell.com/serviceDisclaimer.aspx

■ Mechanical Specification

Case No. 926A Unit:mm

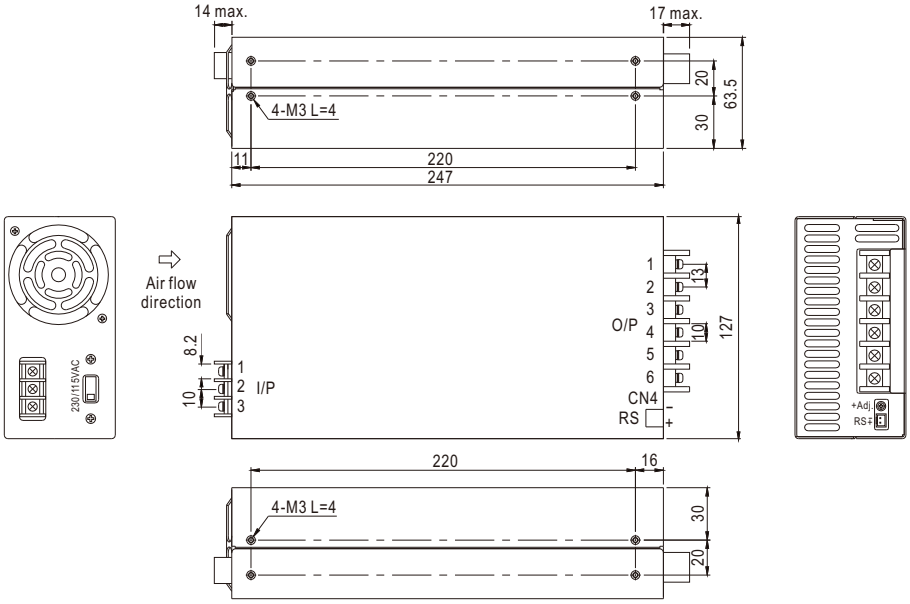

AC input terminal :

Pin No.	Assignment
1	AC/L
2	AC/N
3	FG ⏚

DC Output terminal :

Pin No.	Assignment
1~3	+V
4~6	-V

RS Connector (CN4) : JST B-XH or equivalent

Pin No.	Assignment	Mating Housing	Terminal
1	+S	JST XHP or equivalent	JST SXH-001T or equivalent
2	-S		

■ Block Diagram

fosc : 68KHz

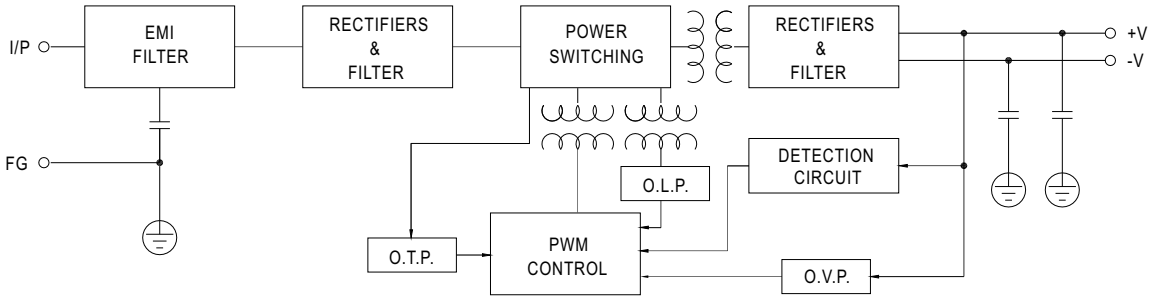

■ Derating Curve

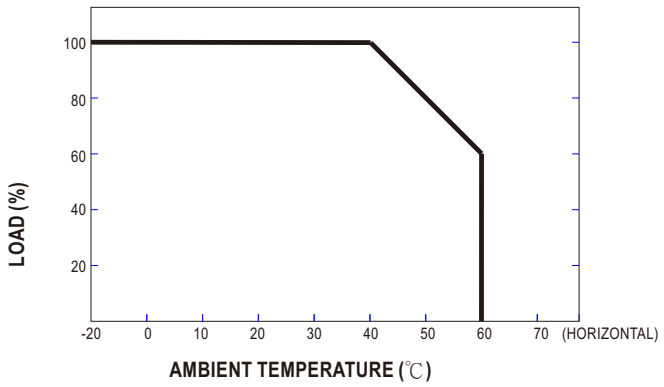
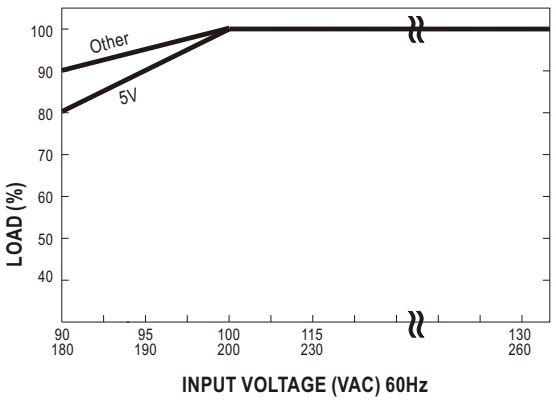
■ Static Characteristics