450W Single Output Power Supply

SE-450 series

■ Features :

- AC input active surge current limiting
- AC input range selected by switch
- Protections: Short circuit /Overload / Over voltage / Over temperature
- Forced air cooling by built-in DC ball bearing fan
- Built-in remote sense function
- LED indicator for power on
- UL approved
- 2 years warranty

User's Manual

■ GTIN CODE

MW Search: https://www.meanwell.com/serviceGTIN.aspx

R33100 RoHS TPTC004 UL62368-1 IEC62368-1

SPECIFICATION

MODEL		SE-450-3.3	SE-450-5	SE-450-12	SE-450-15	SE-450-24	SE-450-36	SE-450-48
OUTPUT	DC VOLTAGE	3.3V	5V	12V	15V	24V	36V	48V
	RATED CURRENT	75A	75A	37.5A	30A	18.8A	12.5A	9.4A
	CURRENT RANGE	0 ~ 75A	0 ~ 75A	0 ~ 37.5A	0 ~ 30A	0 ~ 18.8A	0 ~ 12.5A	0 ~ 9.4A
	RATED POWER	247.5W	375W	450W	450W	451.2W	450W	451.2W
	RIPPLE & NOISE (max.) Note.2	200mVp-p	200mVp-p	200mVp-p	200mVp-p	200mVp-p	200mVp-p	200mVp-p
	VOLTAGE ADJ. RANGE	2.97 ~ 3.63V	4.5 ~ 5.5V	10.8 ~ 13.5V	13.5 ~ 16.5V	21.6 ~ 28.5V	32.4 ~ 39.6V	43.2 ~ 52.8V
	VOLTAGE TOLERANCE Note.3	±3.0%	±3.0%	±1.0%	±1.0%	±1.5%	±1.0%	±1.0%
	LINE REGULATION	±0.5%	±0.5%	±0.3%	±0.3%	±0.2%	±0.2%	±0.2%
	LOAD REGULATION	±2.0%	±2.0%	±0.5%	±0.5%	±0.5%	±0.5%	±0.5%
	SETUP, RISE TIME	1500ms, 50ms/230VAC 1500ms, 50ms/115VAC at full load						
	HOLD UP TIME (Typ.)	16ms/230VAC 12ms/115VAC at full load						
INPUT	VOLTAGE RANGE	90 ~ 132VAC / 180 ~ 264VAC selected by SW 254 ~ 370VDC						
	FREQUENCY RANGE	47 ~ 63Hz						
	EFFICIENCY (Typ.)	74%	78%	83%	84%	86%	86%	88%
	AC CURRENT (Typ.)	10A/115VAC 6A/230VAC						
	INRUSH CURRENT (Typ.)	35A/115VAC 55A/230VAC						
	LEAKAGE CURRENT	<2.5mA / 240VAC						
PROTECTION	OVERLOAD	105 ~ 150% rated output power						
		Protection type : Shut down o/p voltage, re-power on to recovery						
	OVER VOLTAGE	3.8 ~ 4.6V	5.75 ~ 6.75V	13.8 ~ 16.2V	18 ~ 21V	32 ~ 36V	45 ~ 52V	57.6 ~ 67.2V
		Protection type : Shut down o/p voltage, re-power on to recovery						
	OVER TEMPERATURE	Shut down o/p voltage, recovers automatically after temperature goes down						
ENVIRONMENT	WORKING TEMP.	-10 ~ +60℃ (Refer to "Derating Curve")						
	WORKING HUMIDITY	20 ~ 90% RH non-condensing						
	STORAGE TEMP., HUMIDITY	-40 ~ +85℃,10 ~ 95% RH						
	TEMP. COEFFICIENT	±0.05%/℃ (0 ~ 50℃)						
	VIBRATION	10 ~ 500Hz, 2G 10min./1cycle, 60min. each along X, Y, Z axes						
SAFETY	SAFETY STANDARDS	UL62368-1, EAC TP TC 004, BSMI CNS14336-1 approved; Design refer to BS EN/EN62368-1						
	WITHSTAND VOLTAGE	I/P-O/P:3KVAC I/P-FG:2KVAC O/P-FG:0.5KVAC						
	ISOLATION RESISTANCE	I/P-O/P, I/P-FG, O/P-FG:100M Ohms / 500VDC / 25℃/ 70% RH						
OTHERS	MTBF	1557.5 K hrs min. Telcordia SR-332 (Bellcore) ; 224.1K hrs min. MIL-HDBK-217F (25℃)						
	DIMENSION	225*124*50mm (L*W*H)						
	PACKING	1.25Kg;12PCS/16Kg/1CUFT						

NOTE

1. All parameters NOT specially mentioned are measured at 230VAC input, rated load and 25℃ of ambient temperature.
2. Ripple & noise are measured at 20MHz of bandwidth by using a 12" twisted pair-wire terminated with a 0.1uf & 47uf parallel capacitor.
3. Tolerance : includes set up tolerance, line regulation and load regulation.
4. The ambient temperature derating of 3.5℃/1000m with fanless models and of 5℃/1000m with fan models for operating altitude higher than 2000m(6500ft).
5. This power supply does not meet the harmonic current requirements outlined by BS EN/EN61000-3-2. Please do not use this power supply under the following conditions:
   a) the end-devices is used within the European Union, and
   b) the end-devices is connected to public mains supply with 220Vac or greater rated nominal voltage, and
   c) the power supply is:
   - installed in end-devices with average or continuous input power greater than 75W, or
   - belong to part of a lighting system
   Exception:
   Power supplies used within the following end-devices do not need to fulfill BS EN/EN61000-3-2
   a) professional equipment with a total rated input power greater than 1000W;
   b) symmetrically controlled heating elements with a rated power less than or equal to 200W

※ Product Liability Disclaimer : For detailed information, please refer to https://www.meanwell.com/serviceDisclaimer.aspx

■ Mechanical Specification

Case No.986A Unit:mm

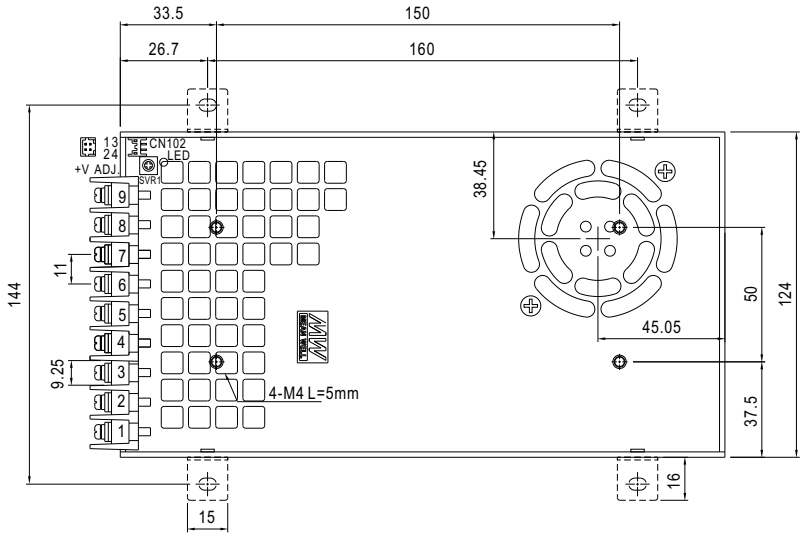

Terminal Pin No. Assignment :

Pin No.	Assignment	Pin No.	Assignment
1	AC/L	4~6	DC OUTPUT -V
2	AC/N	7~9	DC OUTPUT +V
3	FG ⏚		

Function Connector(CN102):HRS DF11-4DP-2DS or equivalent

Pin No.	Status	Mating Housing	Terminal
1,3	+S	HRS DF11-4DS or equivalent	HRS DF11-**SC or equivalent
2,4	-S		

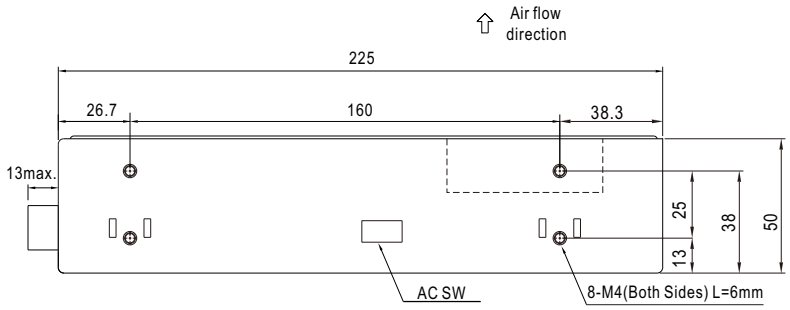

■ Block Diagram

fosc : 100KHz

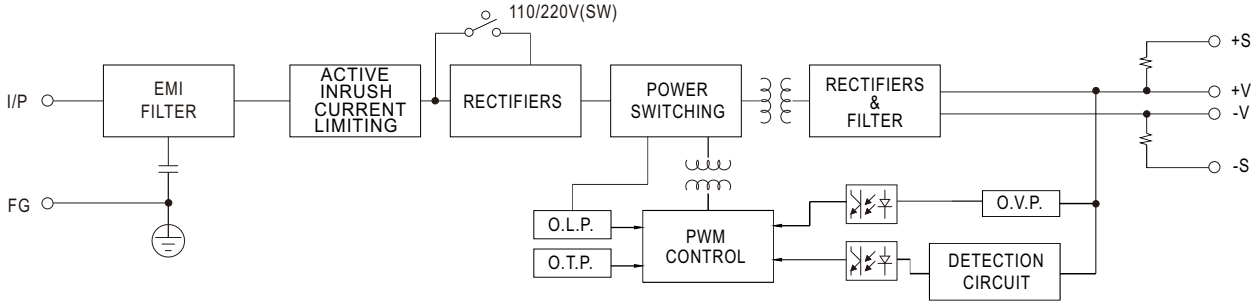

■ Derating Curve

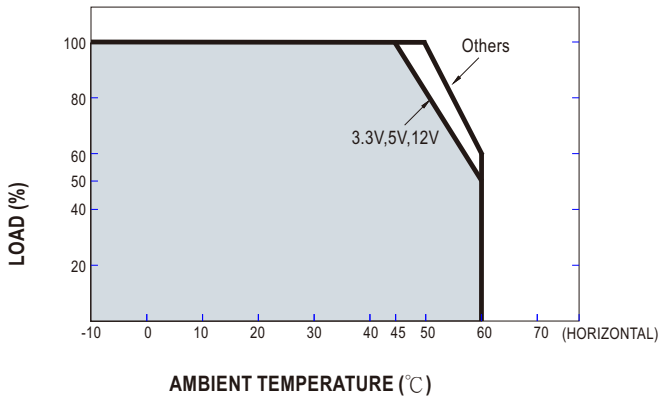
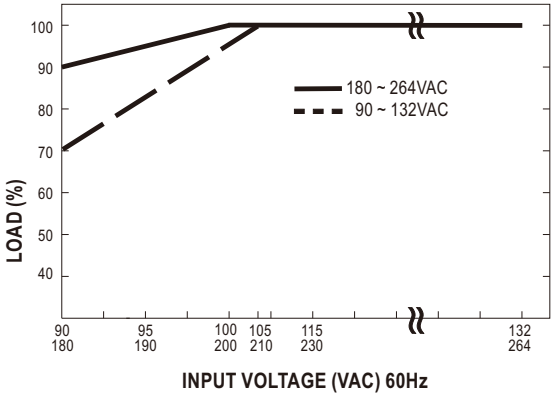
■ Static Characteristics