240W Single Output Industrial DIN RAIL with PFC Function

SDR-240 series

User's Manual

■ Features :

- High efficiency 94% and low power dissipation
- 150% peak load capability
- Built-in active PFC function, PF>0.93
- Protections: Short circuit / Overload / Over voltage / Over temperature
- Cooling by free air convection
- Can be installed on DIN rail TS-35/7.5 or 15
- UL 508 (industrial control equipment) approved
- BS EN/EN61000-6-2(BS EN/EN50082-2) industrial immunity level
- Built-in DC OK relay contact
- 100% full load burn-in test
- 3 years warranty

AS/NZS62368-1 TPTC004 UL508 BS EN/EN62368-1 IEC62368-1

■ GTIN CODE

MW Search: https://www.meanwell.com/serviceGTIN.aspx

SPECIFICATION

MODEL		SDR-240-24	SDR-240-48
OUTPUT	DC VOLTAGE	24V	48V
	RATED CURRENT	10A	5A
	CURRENT RANGE	0 ~ 10A	0 ~ 5A
	RATED POWER	240W	240W
	PEAK CURRENT	15A	7.5A
	PEAK POWER Note.6	360W (3sec.)	
	RIPPLE & NOISE (max.) Note.2	50mVp-p	50mVp-p
	VOLTAGE ADJ. RANGE	24 ~ 28V	48 ~ 55V
	VOLTAGE TOLERANCE Note.3	±1.0%	±1.0%
	LINE REGULATION	±0.5%	±0.5%
	LOAD REGULATION	±1.0%	±1.0%
	SETUP, RISE TIME	650ms, 60ms/230VAC 1300ms, 60ms/115VAC at full load	
	HOLD UP TIME (Typ.)	20ms/230VAC 20ms/115VAC at full load	
INPUT	VOLTAGE RANGE	88 ~ 264VAC 124 ~ 370VDC	
	FREQUENCY RANGE	47 ~ 63Hz	
	POWER FACTOR (Typ.)	0.94/230VAC 0.99/115VAC at full load	
	EFFICIENCY (Typ.) Note.8	94%	
	AC CURRENT (Typ.)	2.6A/115VAC 1.3A/230VAC	
	INRUSH CURRENT (Typ.)	33A/115VAC 55A/230VAC	
	LEAKAGE CURRENT	<1mA / 240VAC	
PROTECTION	OVERLOAD	Normally works within 110 ~ 150% rated output power for more than 3 seconds and then shut down o/p voltage with auto-recovery	
		>150% rated power, constant current limiting with auto-recovery within 2 seconds and may cause to shut down if over 2 seconds	
	OVER VOLTAGE	29 ~ 33V	56 ~ 65V
		Protection type : Shut down o/p voltage with auto-recovery	
	OVER TEMPERATURE	95℃ ±5℃ (TSW : detect on heatsink of power switch)	
		Protection type : Shut down o/p voltage, recovers automatically after temperature goes down	
FUNCTION	DC OK REALY CONTACT RATINGS (max.)	60Vdc/0.3A, 30Vdc/1A, 30Vac/0.5A resistive load	
ENVIRONMENT	WORKING TEMP. Note.5	-25 ~ +70℃ (Refer to "Derating Curve")	
	WORKING HUMIDITY	20 ~ 95% RH non-condensing	
	STORAGE TEMP., HUMIDITY	-40 ~ +85℃, 10 ~ 95% RH	
	TEMP. COEFFICIENT	±0.03%/℃ (0 ~ 50℃)	
	VIBRATION	Component:10 ~ 500Hz, 2G 10min./1cycle, 60min. each along X, Y, Z axes; Mounting: Compliance to IEC60068-2-6	
SAFETY & EMC (Note 4)	SAFETY STANDARDS	UL508, TUV BS EN/EN62368-1, AS/NZS 62368.1, EAC TP TC 004 approved;(meet BS EN/EN60204-1)	
	WITHSTAND VOLTAGE	I/P-O/P:3KVAC I/P-FG:2KVAC O/P-FG:0.5KVAC O/P-DC OK:0.5KVAC	
	ISOLATION RESISTANCE	I/P-O/P, I/P-FG, O/P-FG:>100M Ohms / 500VDC / 25℃/ 70% RH	
	EMC EMISSION	Compliance to BS EN/EN55032 (CISPR32), BS EN/EN61204-3 Class B, BS EN/EN61000-3-2,-3, EAC TP TC 020	
	EMC IMMUNITY	Compliance to BS EN/EN61000-4-2,3,4,5,6,8,11, BS EN/EN55024, BS EN/EN61000-6-2 (BS EN/EN50082-2), BS EN/EN61204-3, heavy industry level, EAC TP TC 020, SEMI F47 approved	
OTHERS	MTBF	1160.3K hrs min. Telcordia SR-332 (Bellcore) ; 169.3K hrs min. MIL-HDBK-217F (25℃)	
	DIMENSION	63*125.2*113.5mm (W*H*D)	
	PACKING	1.03Kg; 12pcs/13.4Kg/1.22CUFT	

NOTE

1. All parameters NOT specially mentioned are measured at 230VAC input, rated load and 25℃ of ambient temperature.
2. Ripple & noise are measured at 20MHz of bandwidth by using a 12" twisted pair-wire terminated with a 0.1uf & 47uf parallel capacitor.
3. Tolerance : includes set up tolerance, line regulation and load regulation.
4. The power supply is considered a component which will be installed into a final equipment. The final equipment must be re-confirmed that it still meets EMC directives.
5. Installation clearances : 40mm on top, 20mm on the bottom, 5mm on the left and right side are recommended when loaded permanently with full power. In case the adjacent device is a heat source, 15mm clearance is recommended.
6. 3 seconds max., please refer to peak loading curves.
7. Derating may be needed under low input voltage. Please check the derating curve for more details.
8. After 30 minutes of burn-in.
9. The ambient temperature derating of 3.5℃/1000m with fanless models and of 5℃/1000m with fan models for operating altitude higher than 2000m(6500ft).

※ Product Liability Disclaimer : For detailed information, please refer to https://www.meanwell.com/serviceDisclaimer.aspx

■ Mechanical Specification

Case No. 979A Unit:mm

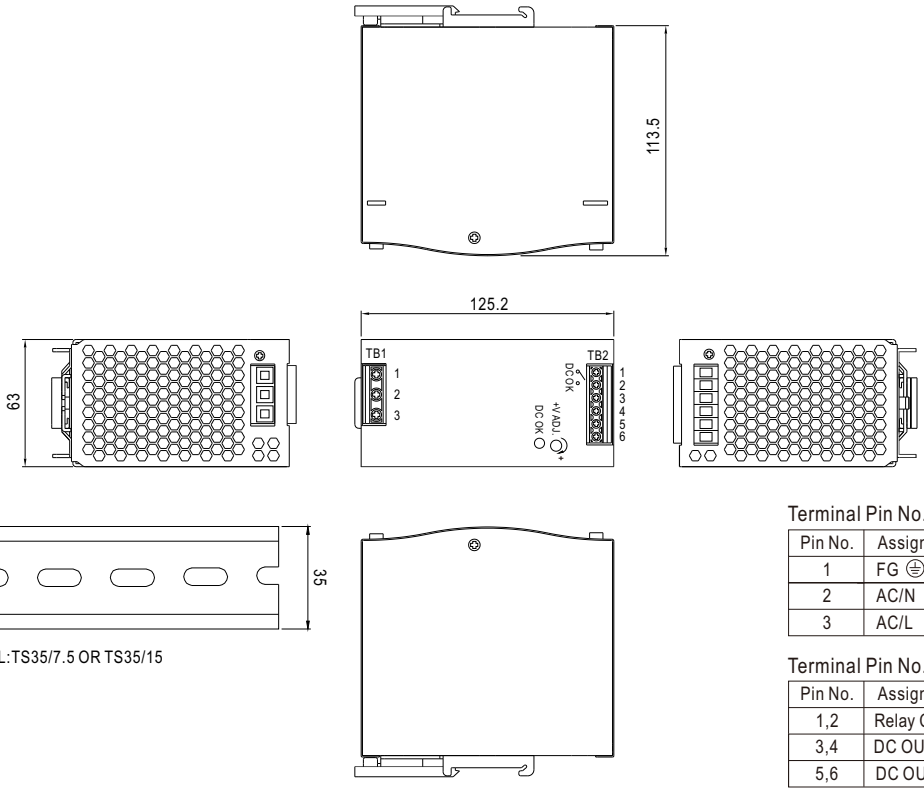

ADMISSIBLE DIN-RAIL:TS35/7.5 OR TS35/15

Terminal Pin No. Assignment (TB1)

Pin No.	Assignment
1	FG ⏚
2	AC/N
3	AC/L

Terminal Pin No. Assignment (TB2)

Pin No.	Assignment
1,2	Relay Contact
3,4	DC OUTPUT +V
5,6	DC OUTPUT -V

■ Block Diagram

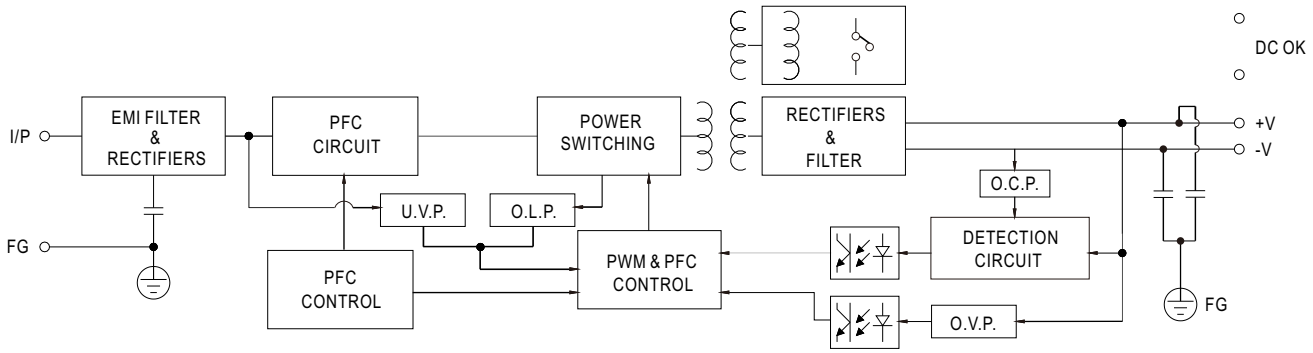

■ DC OK Relay Contact

Contact Close	PSU turns on / DC OK.
Contact Open	PSU turns off / DC Fail.
Contact Ratings (max.)	30V/1A resistive load.

■ Peak Loading

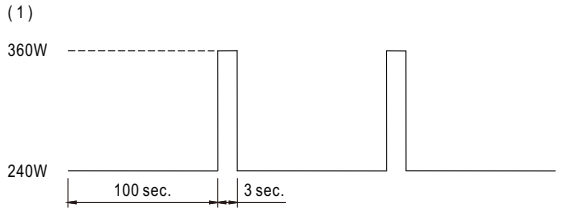

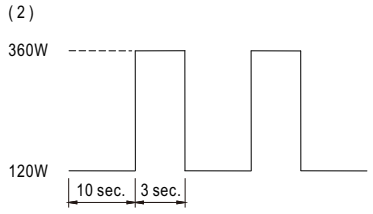

■ Derating Curve

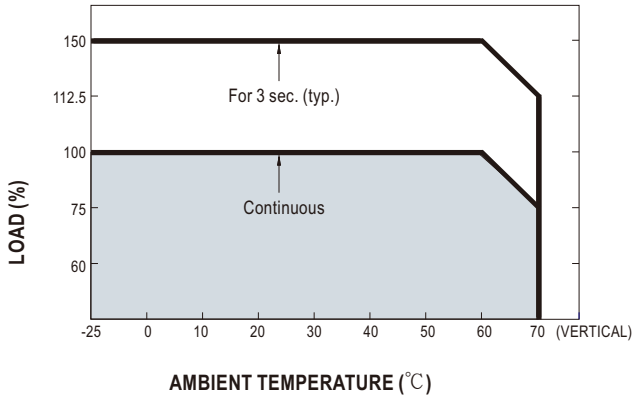
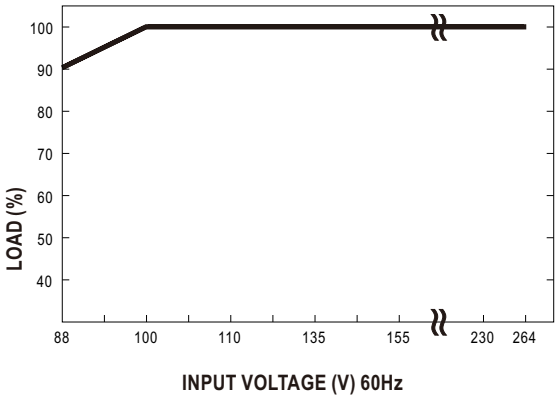
■ Output derating VS input voltage