50W Single Output Switching Power Supply

SCP-50 series

■ Features :

- Universal AC input/Full range
- Protections: Short circuit / Overload / Over voltage / Battery polarity protections (by fuse)
- Built-in temperature compensation function
- Output voltage detection signal
- Cooling by free air convection
- LED indicator for power on
- No load power consumption <0.75W
- Suitable for installation in metallic or non-metallic system enclosure
- 100% full load burn-in test
- 2 years warranty

■ GTIN CODE

MW Search: https://www.meanwell.com/serviceGTIN.aspx

UL62368-1 TPTC004 IEC62368-1

SPECIFICATION

MODEL		SCP-50-12	SCP-50-24
OUTPUT	DC VOLTAGE	13.8V	27.6V
	RATED CURRENT	3.6A	1.8A
	CURRENT RANGE	0 ~ 3.6A	0 ~ 1.8A
	PEAK 5S Note.6	4.3A	2.2A
	RATED POWER	49.7W	49.7W
	RIPPLE & NOISE (max.) Note.2	120mVp-p	200mVp-p
	VOLTAGE ADJ. RANGE	+15,-5%	+15,-5%
	VOLTAGE TOLERANCE Note.3	±2.0%	±1.0%
	LINE REGULATION Note.4	±1.0%	±1.0%
	LOAD REGULATION Note.5	±2.0%	±1.0%
	SETUP, RISE TIME	500ms, 30ms/230VAC 1200ms, 30ms/115VAC at full load	
	HOLD UP TIME (Typ.)	50ms/230VAC 16ms/115VAC at full load	
INPUT	VOLTAGE RANGE	85 ~ 264VAC 120 ~ 370VDC	
	FREQUENCY RANGE	47 ~ 63Hz	
	EFFICIENCY(Typ.)	81%	85%
	AC CURRENT (Typ.)	1.1A/115VAC 0.65A/230VAC	
	INRUSH CURRENT (Typ.)	COLD START 45A	
	LEAKAGE CURRENT	<2mA / 240VAC	
FUNCTION	TEMP. COMPENSATION	By NTC (not provide with the power supply)	
	OUTPUT VOLTAGE SENSOR	L=output voltage +0.2 ~ 0.7V(AC OK); L=0V(AC Fail)	
PROTECTION	OVERLOAD	4.3 ~ 5.8A rated output power	2.2 ~ 2.9A rated output power
		Protection type : Hiccup mode, recovers automatically after fault condition is removed	
	OVER VOLTAGE	16.6 ~ 19.3V	33.1 ~ 38.5V
		Protection type : Shut down o/p voltage, re-power on to recover	
ENVIRONMENT	WORKING TEMP.	-20 ~ +60℃ (Refer to output load derating curve)	
	WORKING HUMIDITY	20 ~ 90% RH non-condensing	
	STORAGE TEMP., HUMIDITY	-40 ~ +85℃, 10 ~ 95% RH	
	TEMP. COEFFICIENT	±0.03%/℃ (0 ~ 45℃)	
	VIBRATION	10 ~ 500Hz, 2G 10min./1cycle, period for 60min. each along X, Y, Z axes	
SAFETY & EMC (Note 7)	SAFETY STANDARDS	UL62368-1, CB(IEC62368-1), EAC TP TC 004 approved, Design refer to BS EN/EN62368-1	
	WITHSTAND VOLTAGE	I/P-O/P:3KVAC I/P-FG:2.0KVAC O/P-FG:0.5KVAC	
	ISOLATION RESISTANCE	I/P-O/P, I/P-FG, O/P-FG:100M Ohms / 500VDC / 25℃/ 70% RH	
	EMC EMISSION	Compliance to BS EN/EN55032 (CISPR32) Class B,BS EN/EN61000-3-2,3, EAC TP TC 020	
	EMC IMMUNITY	Compliance to BS EN/EN61000-4-2, 3, 4, 5, 6, 8,11, BS EN/ENV50204, BS EN/EN55024, BS EN/EN61000-6-1, light industry level, EAC TP TC 020	
OTHERS	MTBF	2868.4K hrs min. Telcordia SR-332 (Bellcore) ; 495.8K hrs min. MIL-HDBK-217F (25℃)	
	DIMENSION	129*98*38mm (L*W*H)	
	PACKING	0.45Kg; 30pcs/14.5Kg/0.95CUFT	
NOTE	1. All parameters NOT specially mentioned are measured at 230VAC input, rated load and 25℃ of ambient temperature. 2. Ripple & noise are measured at 20MHz of bandwidth by using a 12" twisted pair-wire terminated with a 0.1uf & 47uf parallel capacitor. 3. Tolerance : includes set up tolerance, line regulation and load regulation. 4. Line regulation is measured from low line to high line at rated load. 5. Load regulation is measured from 0% to 100% rated load. 6. 33% Duty cycle maximum within every 15 seconds. Average output power should not exceed the rated power. 7. The power supply is considered a component which will be installed into a final equipment. The final equipment must be re-confirmed that it still meets EMC directives. 8. The ambient temperature derating of 3.5℃/1000m with fanless models and of 5℃/1000m with fan models for operating altitude higher than 2000m(6500ft). (As available on http://www.meanwell.com) ※ Product Liability Disclaimer : For detailed information, please refer to https://www.meanwell.com/serviceDisclaimer.aspx		

■ Mechanical Specification

Case No. 903 Unit:mm

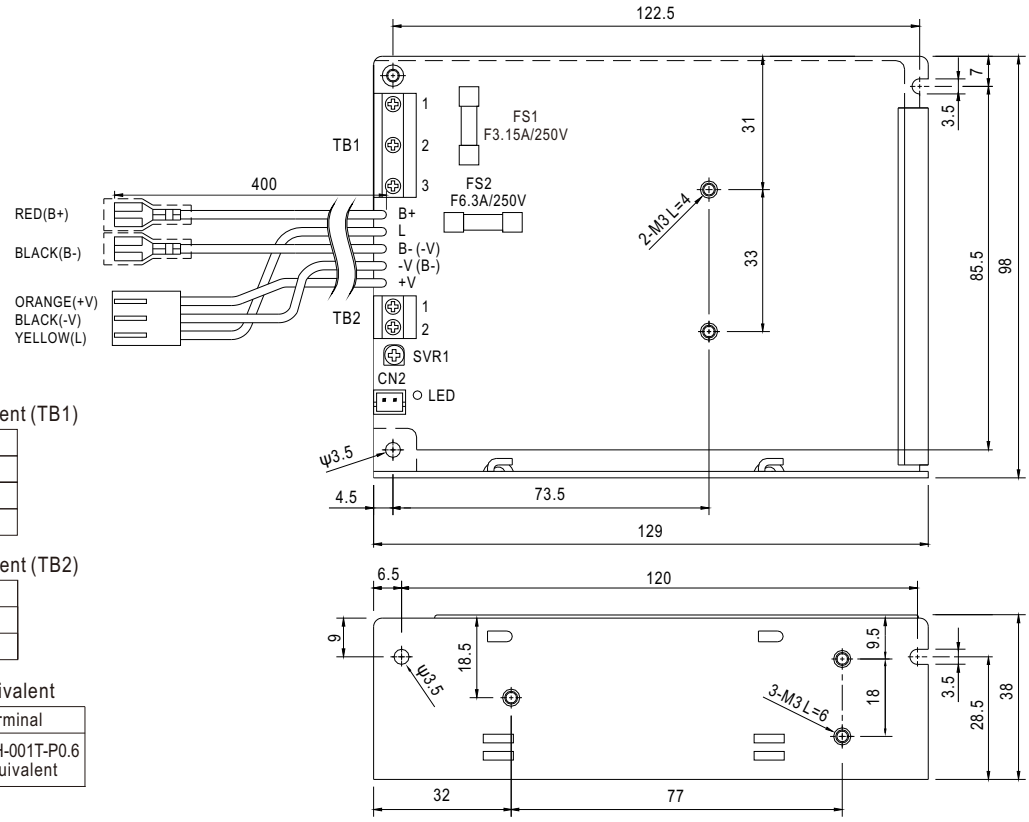

Terminal Pin No. Assignment (TB1)

Pin No.	Assignment
1	AC/L
2	AC/N
3	FG ⏚

Terminal Pin No. Assignment (TB2)

Pin No.	Assignment
1	DC OUTPUT +V
2	DC OUTPUT -V

CN2 : JST B2B-XH or equivalent

Mating Housing	Terminal
JST XHP or equivalent	JST SXH-001T-P0.6 or equivalent

■ Block Diagram

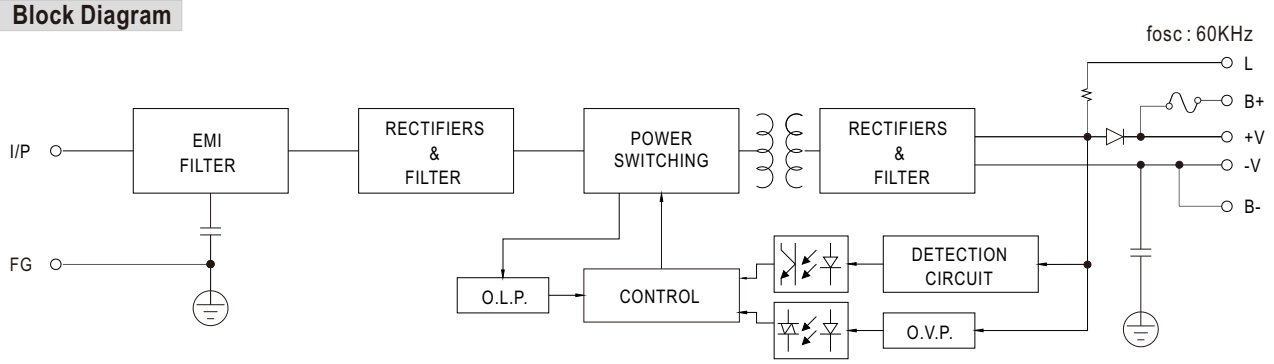

■ Derating Curve

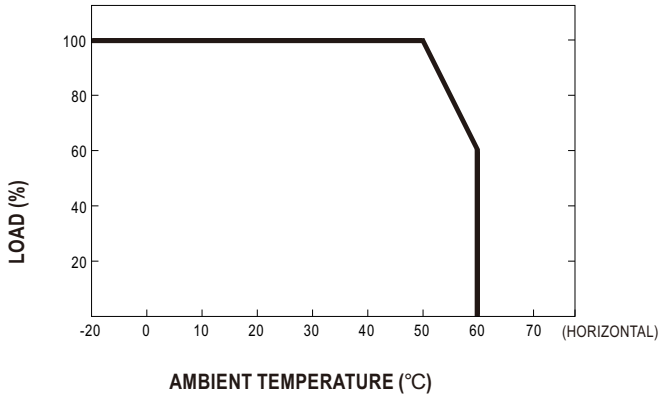

■ Output Derating VS Input Voltage

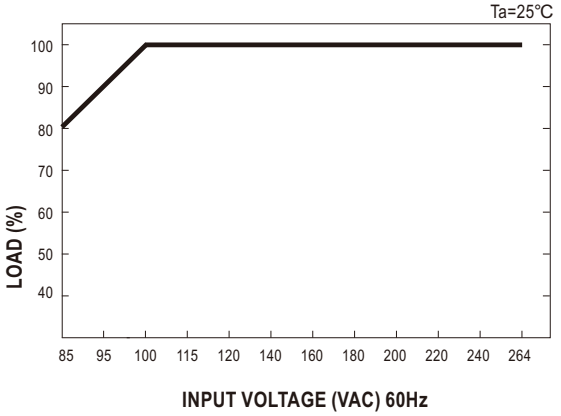

■ Function Description

1.B+,B-

Connect the battery : B+ connected to battery positive.
B- connected to battery negative.

2.L

Output voltage detection, detect output voltage or battery voltage (if battery is used).

	Voltage of L Pin
AC OK	Output voltage +0.2~0.7V(depends on Vf of diode)
AC Fail	0V

3.+V,-V

Output voltage. Can't connect the battery.

4.CN2

Temperature sensor can be connected to the unit to allow temperature compensation of the charging voltage.
If the sensor is not used, the charger still works normally.
Reference example: (Under rated DC output voltage)
Connect 100KΩ Thermistor(THINKING) on NTC. The output voltage will change along with the temperature change. If the output voltage is adjusted other than the rated value by internal potential meter, please consult Meanwell for suitable value of Thermistor.

	Ta :0	Ta :25	Ta :50
SCP-50-12	14.4±0.2V	13.8±0.1V	13.2±0.2V
SCP-50-24	29.3±0.4V	27.6±0.2V	26.4±0.4V

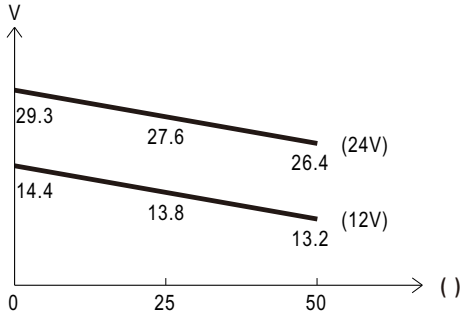

Temperature Sensor