65W Dual Output Switching Power Supply

RD-65 series

User's Manual

Features :

- Universal AC input / Full range
- Protections: Short circuit / Overload / Over voltage
- Cooling by free air convection
- LED indicator for power on
- 100% full load burn-in test
- All using 105℃ long life electrolytic capacitors
- Withstand 300VAC surge input for 5 second
- High operating temperature up to 70℃
- Withstand 5G vibration test
- High efficiency, long life and high reliability
- 3 years warranty

UL62368-1 BS EN/EN62368-1 IEC62368-1 TPTC004

GTIN CODE

MW Search: https://www.meanwell.com/serviceGTIN.aspx

SPECIFICATION

MODEL		RD-65A		RD-65B	
OUTPUT	OUTPUT NUMBER	CH1	CH2	CH1	CH2
	DC VOLTAGE	5V	12V	5V	24V
	RATED CURRENT	6A	3A	4A	2A
	CURRENT RANGE Note.6	0 ~ 8A	0 ~ 4A	0 ~ 8A	0 ~ 3A
	RATED POWER Note.6	66W		68W	
	RIPPLE & NOISE (max.) Note.2	80mVp-p	120mVp-p	80mVp-p	150mVp-p
	VOLTAGE ADJ. RANGE	CH1: 4.75 ~ 5.5V		CH1: 4.75 ~ 5.5V	
	VOLTAGE TOLERANCE Note.3	±2.0%	±6.0%	±2.0%	+4,-8%
	LINE REGULATION Note.4	±0.5%	±1.5%	±0.5%	±2.0%
	LOAD REGULATION Note.5	±0.5%	±3.0%	±0.5%	±6.0%
	SETUP, RISE TIME	500ms, 20ms/230VAC 1200ms, 30ms/115VAC at full load			
	HOLD UP TIME (Typ.)	60ms/230VAC 14ms/115VAC at full load			
INPUT	VOLTAGE RANGE	88 ~ 264VAC 125 ~ 373VDC (Withstand 300VAC surge for 5sec. Without damage)			
	FREQUENCY RANGE	47 ~ 63Hz			
	EFFICIENCY(Typ.)	78%		77%	
	AC CURRENT (Typ.)	2A/115VAC 1.2A/230VAC			
	INRUSH CURRENT (Typ.)	COLD START 50A/230VAC			
	LEAKAGE CURRENT	<2mA / 240VAC			
PROTECTION	OVERLOAD	110 ~ 150% rated output power			
		Protection type : Hiccup mode, recovers automatically after fault condition is removed			
	OVER VOLTAGE	CH1: 5.75 ~ 6.75V			
		Protection type : Hiccup mode, recovers automatically after fault condition is removed			
ENVIRONMENT	WORKING TEMP.	-25 ~ +70℃ (Refer to "Derating Curve")			
	WORKING HUMIDITY	20 ~ 90% RH non-condensing			
	STORAGE TEMP., HUMIDITY	-40 ~ +85℃, 10 ~ 95% RH			
	TEMP. COEFFICIENT	±0.03%/℃ (0 ~ 50℃)on +5V output			
	VIBRATION	10 ~ 500Hz, 5G 10min./1cycle, period for 60min. each along X, Y, Z axes			
SAFETY & EMC (Note 7)	SAFETY STANDARDS	UL62368-1, TUV BS EN/EN62368-1, EAC TP TC 004 approved			
	WITHSTAND VOLTAGE	I/P-O/P:3KVAC I/P-FG:2KVAC O/P-FG:0.5KVAC			
	ISOLATION RESISTANCE	I/P-O/P, I/P-FG, O/P-FG:100M Ohms / 500VDC / 25℃/ 70% RH			
	EMC EMISSION	Compliance to BS EN/EN55032 (CISPR32) Class B, BS EN/EN61000-3-2,-3, EAC TP TC 020			
	EMC IMMUNITY	Compliance to BS EN/EN61000-4-2,3,4,5,6,8,11, BS EN/EN61000-6-2 (BS EN/EN50082-2), heavy industry level, EAC TP TC 020			
OTHERS	MTBF	2940.2K hrs min. Telcordia SR-332 (Bellcore) ; 541.0K hrs min. MIL-HDBK-217F (25℃)			
	DIMENSION	129*98*38mm (L*W*H)			
	PACKING	0.44Kg; 30pcs/14.2Kg/0.72CUFT			
NOTE	1. All parameters NOT specially mentioned are measured at 230VAC input, rated load and 25℃ of ambient temperature. 2. Ripple & noise are measured at 20MHz of bandwidth by using a 12" twisted pair-wire terminated with a 0.1uf & 47uf parallel capacitor. 3. Tolerance : includes set up tolerance, line regulation and load regulation, when multi-channel output, it is recommended that CH1 load > 10%. 4. Line regulation is measured from low line to high line at rated load. 5. Load regulation is measured from 20% to 100% rated load, and other output at 60% rated load. 6. Each output can work within current range. But total output power can't exceed rated output power. 7. The power supply is considered a component which will be installed into a final equipment. All the EMC tests are been executed by mounting the unit on a 360mm*360mm metal plate with 1mm of thickness. The final equipment must be re-confirmed that it still meets EMC directives. For guidance on how to perform these EMC tests, please refer to "EMI testing of component power supplies." (as available on http://www.meanwell.com) 8. The ambient temperature derating of 3.5℃/1000m with fanless models and of 5℃/1000m with fan models for operating altitude higher than 2000m(6500ft). ※ Product Liability Disclaimer : For detailed information, please refer to https://www.meanwell.com/serviceDisclaimer.aspx				

■ Mechanical Specification

Case No. 903 Unit:mm

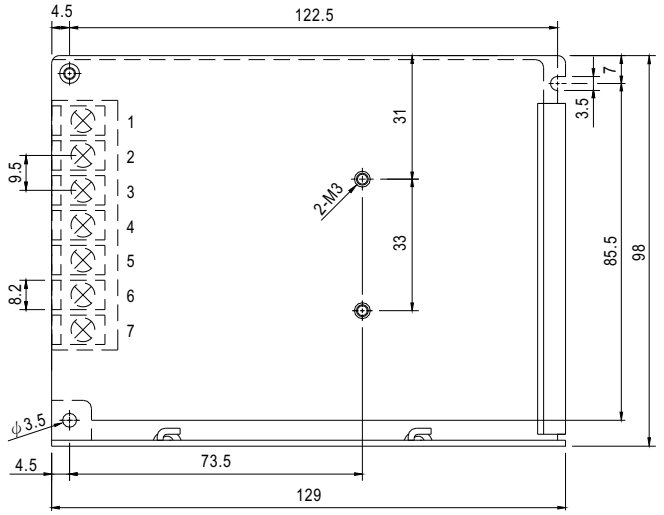

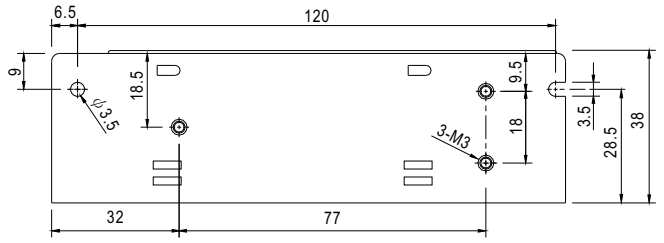

Terminal Pin No. Assignment

Pin No.	Assignment	Pin No.	Assignment
1	AC/L	4,6	DC OUTPUT COM
2	AC/N	5	DC OUTPUT +V2
3	FG ⏚	7	DC OUTPUT +V1

■ Block Diagram

fosc : 60KHz

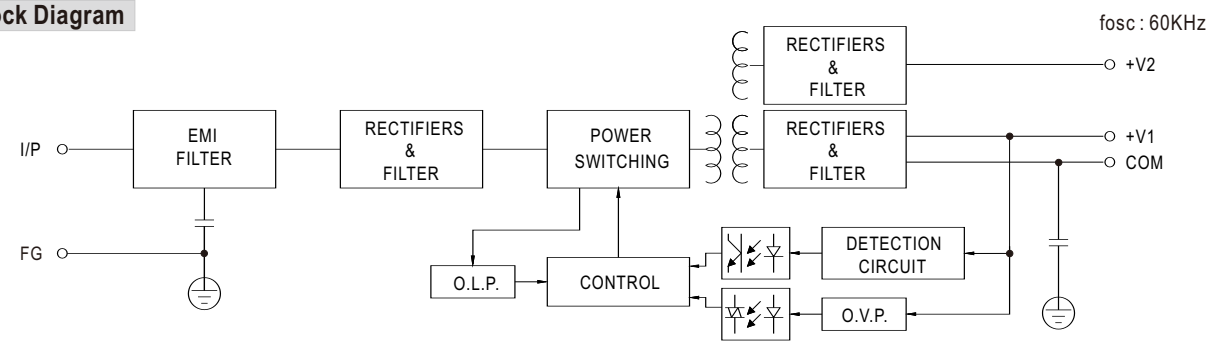

■ Derating Curve

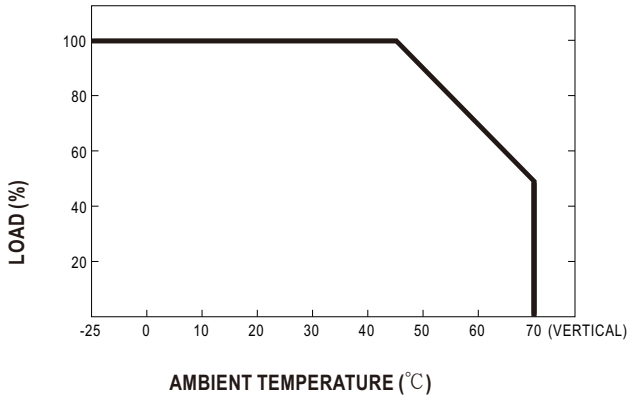
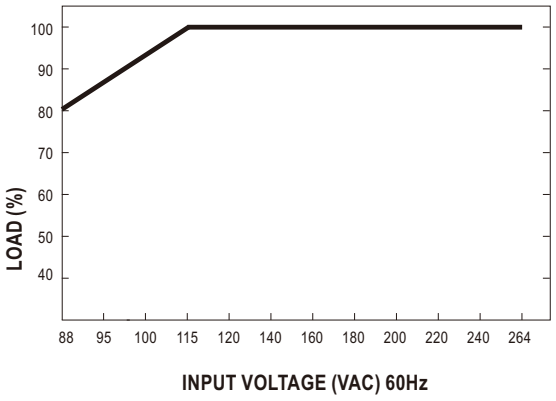
■ Output Derating VS Input Voltage