60W Single Output with Battery Charger (UPS Function)

DRC-60 series

UL62368-1 BS EN/EN62368-1 IEC62368-1 TPTC004

Features

- Universal AC input / Full range
- Protections: Short circuit / Overload / Over voltage
- Battery low protection / Battery reverse polarity protection by fuse
- Can be installed on DIN rail TS-35/7.5 or 15
- Alarm signal for AC OK and Battery low via relay contact
- Cooling by free air convection
- Pass LPS
- LED indicator for power on
- 100% full load burn-in test
- 3 years warranty

Applications

- Security system
- Emergency lighting system
- Alarm system
- DC UPS system
- Central monitoring system
- Access systems

GTIN CODE

MW Search: https://www.meanwell.com/serviceGTIN.aspx

Description

DRC-60 is a 60W AC/DC DIN rail type security power supply series. In addition to the primary output, there is a charger output with a smaller rated current, enabling the backup power supply application the security access systems require. DRC-60 accepts the universal input between 90VAC and 264VAC, and supplies 13.8VDC and 27.6VDC at output, respectively. With the efficiency up to 88%, it can operate with air convection cooling under -30℃ through 70℃. In addition to the key protection features such as overload protection, over voltage protection, battery low cut off, and battery reverse polarity protection (by fuse), the alarm signal for AC OK and battery low signaling is provided, via relay contact output, to facilitate the system design.

Model Encoding

DRC - 60 A

- A — Output voltage
- 60 — Output wattage
- DRC — Series name

SPECIFICATION

MODEL		DRC-60A		DRC-60B	
OUTPUT	OUTPUT NUMBER	CH1	CH2	CH1	CH2
	DC VOLTAGE	13.8V	13.8V	27.6V	27.6V
	RATED CURRENT	2.8A	1.5A	1.4A	0.75A
	CURRENT RANGE	0 ~ 4.3A	--------	0 ~ 2.15A	--------
	RATED POWER	59.34W		59.34W	
	RIPPLE & NOISE (max.) Note.2	120mVp-p	--------	200mVp-p	--------
	VOLTAGE ADJ. RANGE	CH1:12 ~ 15V		CH1:24 ~ 30V	
	VOLTAGE TOLERANCE Note.3	±1.0%	--------	±1.0%	--------
	LINE REGULATION	±0.5%	--------	±0.5%	--------
	LOAD REGULATION	±0.5%	--------	±0.5%	--------
	SETUP, RISE TIME Note.4	400ms, 50ms/230VAC 800ms, 50ms/115VAC at full load			
	HOLD UP TIME (Typ.)	50ms/230VAC 10ms/115VAC at full load			
INPUT	VOLTAGE RANGE	90 ~ 264VAC 127 ~ 370VDC [DC input operation possible by connecting AC/L(+), AC/N(-)]			
	FREQUENCY RANGE	47 ~ 63Hz			
	EFFICIENCY (Typ.)	86%		88%	
	AC CURRENT (Typ.)	1.3A/115VAC 0.8A/230VAC			
	INRUSH CURRENT (Typ.)	COLD START 30A/115VAC 60A/230VAC			
PROTECTION	OVERLOAD	105 ~ 150% rated output power			
		Protection type : Hiccup mode, recovers automatically after fault condition is removed			
	OVER VOLTAGE	CH1:14.49 ~ 18.63V		CH1:28.98 ~ 37.26V	
		Protection type : Shut down o/p voltage, re-power on to recover			
	BATTERY CUT OFF	10±0.5V		20±1V	
FUNCTION	AC OK	Relay contact output, ON : AC OK ; OFF : AC Fail ; max. rating : 30V/1A			
	BATTERY LOW	Relay contact output, OFF : Battery OK ; ON : Battery Low ; max. rating : 30V/1A			
		Battery low voltage : < 11V		Battery low voltage : < 22V	
ENVIRONMENT	WORKING TEMP.	-30 ~ +70℃ (Refer to "Derating Curve")			
	WORKING HUMIDITY	20 ~ 90% RH non-condensing			
	STORAGE TEMP., HUMIDITY	-40 ~ +85℃, 10 ~ 95% RH			
	TEMP. COEFFICIENT	±0.03%/℃ (0 ~ 50℃) on CH1 output			
	VIBRATION	10 ~ 500Hz, 2G 10min./1cycle, 60min. each along X, Y, Z axes			
SAFETY & EMC (Note 5)	SAFETY STANDARDS	UL62368-1, TUV BS EN/EN62368-1, EAC TP TC 004, AS/NZS 60950.1 approved			
	WITHSTAND VOLTAGE	I/P-O/P:3KVAC I/P-FG:2KVAC O/P-FG:0.5KVAC			
	ISOLATION RESISTANCE	I/P-O/P, I/P-FG, O/P-FG:100M Ohms / 500VDC / 25℃/ 70% RH			
	EMC EMISSION	Compliance to BS EN/EN55032 (CISPR32) Class B, BS EN/EN61000-3-2,-3, EAC TP TC 020			
	EMC IMMUNITY	Compliance to BS EN/EN61000-4-2,3,4,5,6,8,11, BS EN/EN55024, BS EN/EN61204-3, light industry level, EAC TP TC 020			
OTHERS	MTBF	1854.1K hrs min. Telcordia SR-332 (Bellcore) ; 504.1K hrs min. MIL-HDBK-217F (25℃)			
	DIMENSION	40*90*100mm (W*H*D)			
	PACKING	0.3Kg; 42pcs/13.6Kg/0.82CUFT			
NOTE	1. All parameters NOT specially mentioned are measured at 230VAC input, rated load and 25℃ of ambient temperature. 2. Ripple & noise are measured at 20MHz of bandwidth by using a 12" twisted pair-wire terminated with a 0.1uf & 47uf parallel capacitor. 3. Tolerance : includes set up tolerance, line regulation and load regulation. 4. Length of set up time is measured at cold first start. Turning ON/OFF the power supply may lead to increase of the set up time. 5. The power supply is considered a component which will be installed into a final equipment. The final equipment must be re-confirmed that it still meets EMC directives. 6. Installation clearances : 40mm on top, 20mm on the bottom, 5mm on the left and right side are recommended when loaded permanently with full power. In case the adjacent device is a heat source, 15mm clearance is recommended. 7. The ambient temperature derating of 3.5℃/1000m with fanless models and of 5℃/1000m with fan models for operating altitude higher than 2000m(6500ft). ※ Product Liability Disclaimer : For detailed information, please refer to https://www.meanwell.com/serviceDisclaimer.aspx				

Block Diagram

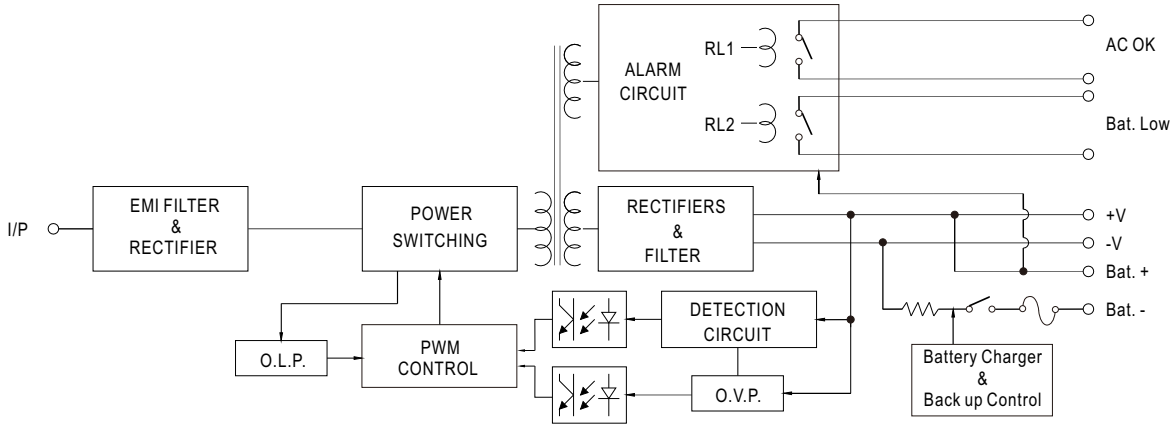

Derating Curve

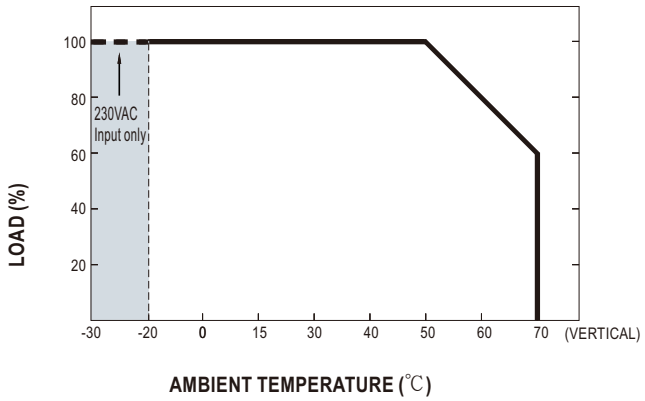

Static Characteristics

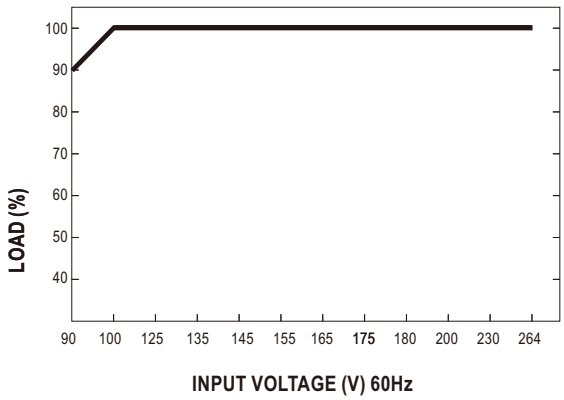

■ Suggested Application

1.Backup connection for AC interruption

(1) Please refer to Fig1.1 for suggested connection.

The power supply charges the battery and provides energy to the load at the same time when AC mains is OK.

The battery starts to supply power to the load when AC mains fails.

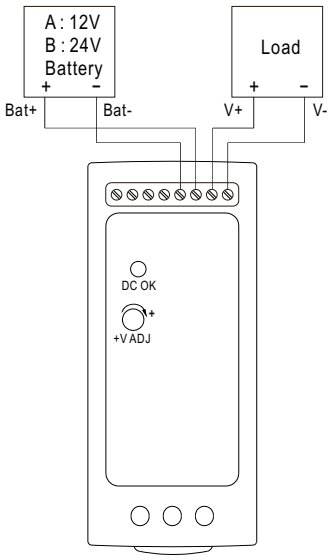

Fig 1.1 Suggested system connection

2.Alarm signal for AC OK and battery low

(1) Alarm Signal is sent out through " AC OK " & " Battery Low " pins via relay contact.

(2) An external voltage source is required for this function. The maximum applied voltage is 30V and the maximum sink current is 1A. Please refer to Fig 2.2.

(3) Table2.1 explains the alarm function built in the power supply

(4) AC OK signal (RL1,referring to Block Diagram) will go into hiccup mode when the overload protecton is activated.

Function	Description	Output of alarm
AC OK	The signal is "Low" when the power supply turns ON.	Low or short
	The signal turns to be "High" when the power supply turns OFF.	High or open (External applied voltage 30V max.)
Battery Low	The signal is "Low" when the voltage of battery is under A:11V, B:22V.	Low or short
	The signal is "High" when the voltage of battery is above A:11V, B:22V.	High or open (External applied voltage 30V max.)

Table 2.1 Explanation of alarm signal

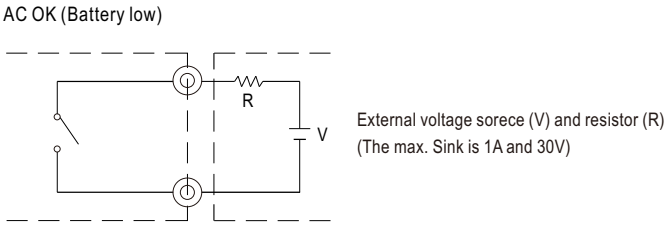

Fig 2.2 Internal circuit of AC OK (Battery Low), via relay contact

■ Mechanical Specification

Case No.962A Unit:mm

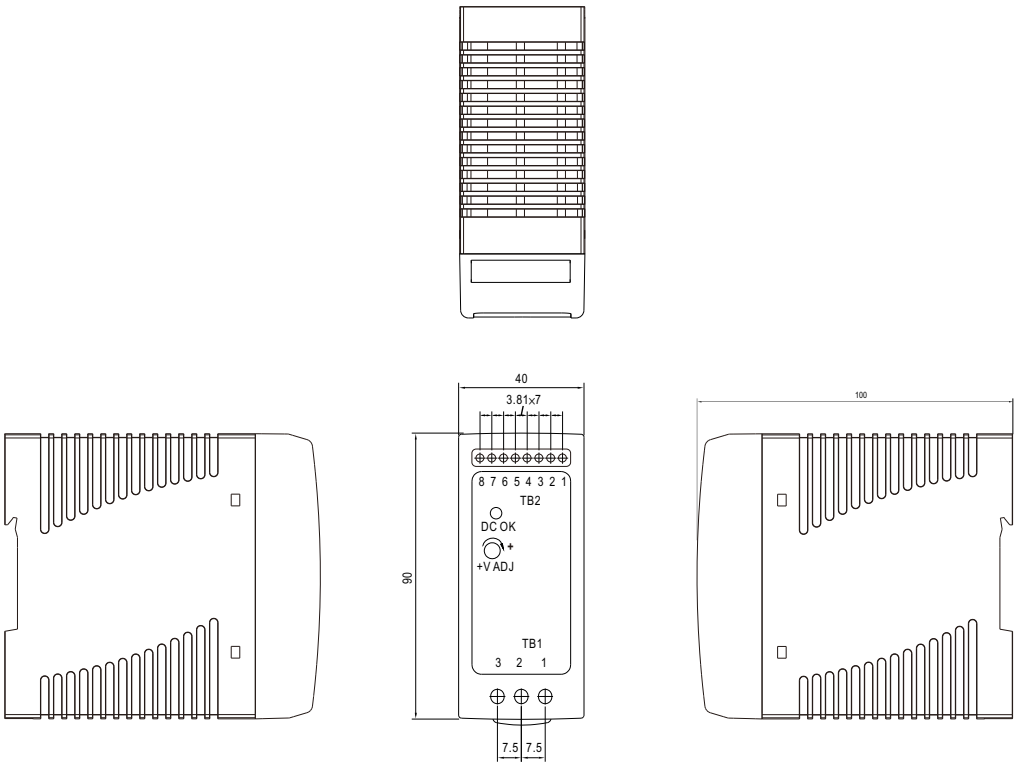

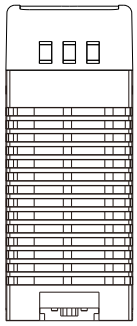

Terminal Pin No. Assignment (TB1):

Pin No.	Assignment
1	AC/L or DC+
2	AC/N or DC-
3	FG ⏚

Terminal Pin No. Assignment (TB2):

Pin No.	Assignment	Pin No.	Assignment
1	-V	4	Bat. -
2	+V	5,6	AC OK
3	Bat. +	7,8	Bat. Low

■ Installation Instruction

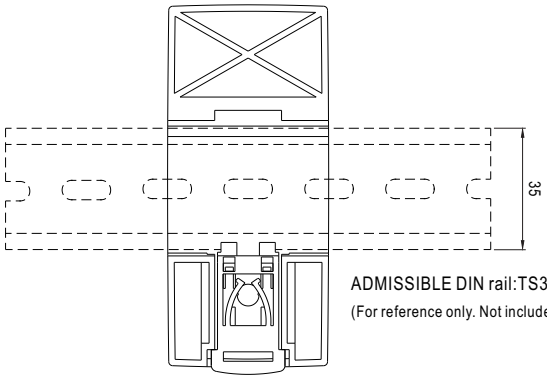

Back View

ADMISSIBLE DIN rail:TS35/7.5 OR TS35/15
(For reference only. Not included with unit.)

This series fits DIN rail TS35/7.5 or TS35/15.
For installation details, please refer to the Instruction manual.

■ Installation Manual

Please refer to : http://www.meanwell.com/manual.html