155W Single Output with Battery Charger(UPS Function) AD-155 series

■ Features :

- Universal AC input / Full range
- Protections: Short circuit / Overload / Over voltage
- Battery low and battery polarity protection
- Cooling by free air convection
- 100% full load burn-in test
- Fixed switching frequency at PFC 67KHz, PWM 134KHz
- 2 years warranty

■ GTIN CODE

MW Search: https://www.meanwell.com/serviceGTIN.aspx

AS/NZS62368-1 UL62368-1 BS EN/EN62368-1 IEC62368-1 TPTC004

SPECIFICATION

MODEL		AD-155A		AD-155B		AD-155C	
OUTPUT	OUTPUT NUMBER	CH1	CH2	CH1	CH2	CH1	CH2
	DC VOLTAGE	13.8V	13.3V	27.6V	27.1V	54V	53.5V
	RATED CURRENT	10.5A	0.5A	5A	0.5A	2.7A	0.2A
	CURRENT RANGE	0 ~ 11.5A	0 ~ 0.5A	0 ~ 5.5A	0 ~ 0.5A	0 ~ 2.7A	0 ~ 0.5A
	RATED POWER	151.55W		151.55W		156.5W	
	RIPPLE & NOISE (max.) Note.2	150mVp-p	--------	150mVp-p	--------	240mVp-p	--------
	VOLTAGE ADJ. RANGE	CH1: 12 ~ 14.5V		CH1: 24 ~ 29V		CH1: 48 ~ 58V	
	VOLTAGE TOLERANCE Note.3	±2.0%	--------	±1.0%	--------	±1.0%	--------
	LINE REGULATION	±0.5%	--------	±0.5%	--------	±0.5%	--------
	LOAD REGULATION	±0.5%	--------	±0.5%	--------	±0.5%	--------
	SETUP, RISE TIME	1000ms, 90ms/230VAC 2000ms, 90ms/115VAC at full load					
	HOLD UP TIME (Typ.)	24ms/230VAC 20ms/115VAC at full load					
INPUT	VOLTAGE RANGE	88 ~ 264VAC 124 ~ 370VDC					
	FREQUENCY RANGE	47 ~ 63Hz					
	POWER FACTOR (Typ.)	PF>0.92 at full load					
	EFFICIENCY (Typ.)	80%		84%		84%	
	AC CURRENT (Typ.)	2.5A/115VAC 1.5A/230VAC					
	INRUSH CURRENT (Typ.)	COLD START 23A/115VAC 45A/230VAC					
	LEAKAGE CURRENT	<1mA / 240VAC					
PROTECTION	OVERLOAD	CH1:105 ~ 135% CH2:0.51 ~ 0.9A rated output power					
		Protection type : AC Charging Mode : Constant current limiting, recovers automatically after fault condition is removed UPS Mode : Protected by internal fuse					
	OVER VOLTAGE	CH1:15.87 ~ 18.63V		CH1:31.74 ~ 37.26V		CH1:62.1 ~ 72.9V	
		Protection type : Shut down o/p voltage, re-power on to recover					
	BATTERY LOW	10V±0.8V		19.5V(+1.5V,-1V)		39V±2V	
ENVIRONMENT	WORKING TEMP.	-10 ~ +60℃ (Refer to "Derating Curve")					
	WORKING HUMIDITY	20 ~ 90% RH non-condensing					
	STORAGE TEMP., HUMIDITY	-20 ~ +85℃, 10 ~ 95% RH					
	TEMP. COEFFICIENT	±0.03%/℃ (0 ~ 50℃)					
	VIBRATION	10 ~ 500Hz, 2G 10min./1cycle, 60min. each along X, Y, Z axes					
SAFETY & EMC (Note 4)	SAFETY STANDARDS	UL62368-1, TUV BS EN/EN62368-1, AS/NZS 62368.1, EAC TP TC 004 approved					
	WITHSTAND VOLTAGE	I/P-O/P:3KVAC I/P-FG:2KVAC O/P-FG:0.5KVAC					
	ISOLATION RESISTANCE	I/P-O/P, I/P-FG, O/P-FG:100M Ohms / 500VDC / 25℃/ 70% RH					
	EMC EMISSION	Compliance to BS EN/EN55032 (CISPR32) Class B, BS EN/EN61000-3-2,-3, EAC TP TC 020					
	EMC IMMUNITY	Compliance to BS EN/EN61000-4-2,3,4,5,6,8,11, BS EN/EN55024, light industry level, EAC TP TC 020					
OTHERS	MTBF	1818.3K hrs min. Telcordia SR-332 (Bellcore) ; 229.9K hrs min. MIL-HDBK-217F (25℃)					
	DIMENSION	199*110*50mm (L*W*H)					
	PACKING	0.88Kg; 16pcs/15Kg/0.95CUFT					
NOTE	1. All parameters NOT specially mentioned are measured at 230VAC input, rated load and 25℃ of ambient temperature. 2. Ripple & noise are measured at 20MHz of bandwidth by using a 12" twisted pair-wire terminated with a 0.1uf & 47uf parallel capacitor. 3. Tolerance : includes set up tolerance, line regulation and load regulation. 4. The power supply is considered a component which will be installed into a final equipment. All the EMC tests are been executed by mounting the unit on a 360mm*360mm metal plate with 1mm of thickness. The final equipment must be re-confirmed that it still meets EMC directives. For guidance on how to perform these EMC tests, please refer to "EMI testing of component power supplies." (as available on http://www.meanwell.com) 5. The ambient temperature derating of 3.5℃/1000m with fanless models and of 5℃/1000m with fan models for operating altitude higher than 2000m(6500ft). ※ Product Liability Disclaimer : For detailed information, please refer to https://www.meanwell.com/serviceDisclaimer.aspx						

■ Mechanical Specification

Case No. 906 Unit:mm

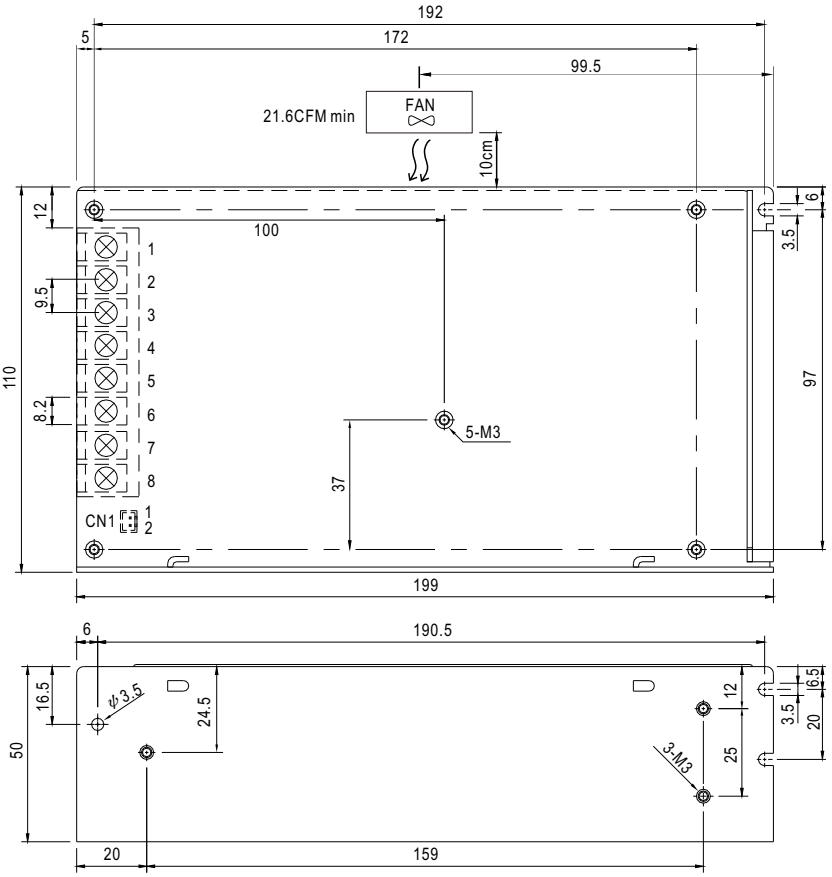

Terminal Pin No. Assignment

Pin No.	Assignment	Pin No.	Assignment
1	AC/L	5	BAT. +
2	AC/N	6	BAT. -/COM
3	FG ⏚	7	DC OUTPUT COM
4	NC	8	DC OUTPUT +V

CN1 Pin No. Assignment :JST B2B-XH or equivalent

Pin No.	Assignment	Mating Housing	Terminal
1	RESET SW	JST XHP or equivalent	JST SXH-001T-P0.6 or equivalent
2			

PFC fosc : 67KHz
PWM fosc : 134KHz

■ Block Diagram

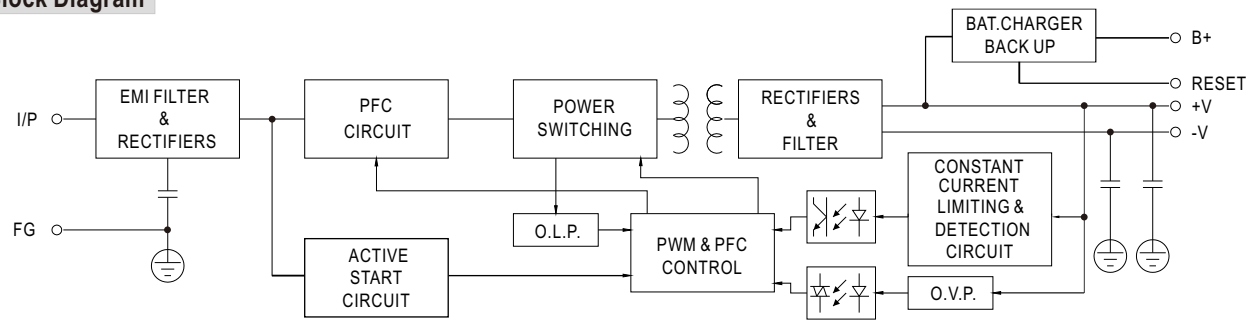

■ Derating Curve

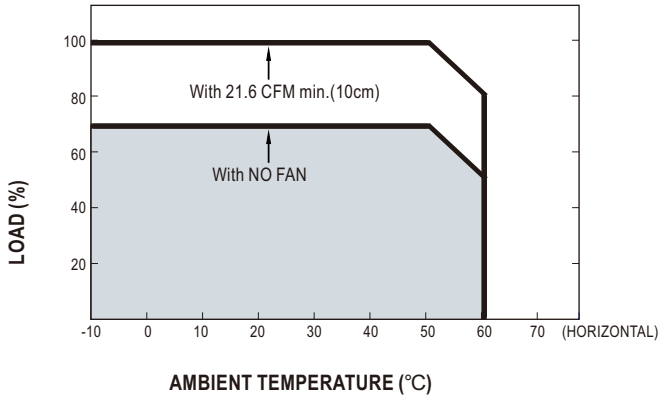
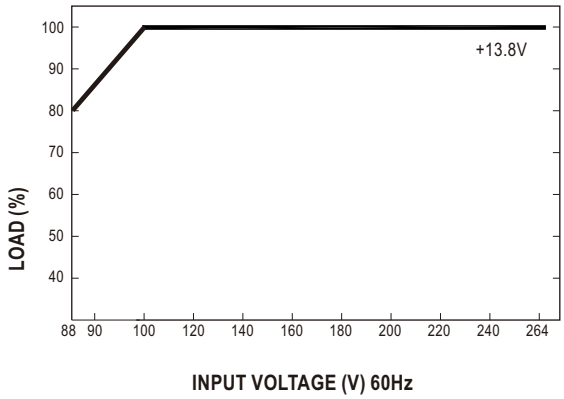
■ Output Derating VS Input Voltage (A)