OUTDOOR

ROBUS®

CHASE 20W LED Double Spot Wall Light, Standard and PIR sensor, CCT selectable 3000K, 4000K, 6000K, IP 54 White and Black Housing

These great looking outdoor LED spot lights provide both energy efficiency and security, available in both Black & White. Quicker & Easier fit off with separate deeper base with a push in connection style. Available in Standard or with built in PIR which has adjustable sensitivity, hold time & lux settings for different environmental conditions.

Features:

- CCT3 – 3000k, 4000k & 6,000k
- Quick Connecting base / fitting
- IP54 – Fitting & PIR Sensor
- Manual Override (PIR Sensor)

Applications:

- Garages & Workshops
- Patio & Deck areas
- Garden & driveway paths
- Sign Illumination

Construction:

- Polycarbonate housing & trim
- Polycarbonate lens covers

PIR Settings:

- Time Duration 10s to 10min
- Lux Adjustment range 0 – 2000 Lux
- Mounting Height range 1.5m to 3m
- Detection Angle 150 degrees
- Sensor Detection range 12m

Product Code:	STANDARD	PIR
White	RCH20CCT3-01	RCH20CCT3P-01
Black	RCH20CCT3-04	RCH20CCT3P-04
Comparable to:	2x70W Halogen	2x70W Halogen
Total Power (W):	19.4/18.7/19.3	19.4/18.7/19.3
Total Light Output (lm):	1,790/2,110/1,960	1,790/2,110/1,960
Efficacy (lm / cctW):	93/113/102	93/113/102
Illuminance at 1m (lux):	780/870/770	780/870/770
Beam Angle (deg):	100	100
CCT (K):	3,000/4,000/6,000	3,000/4,000/6,000
CRI (Ra):	80	80
Rated Life (hrs):	30,000	30,000
Warranty (yrs):	3	3
Ingress Protection (IP):	54	54
Operating Temperature (˚C):	-20 ≤ Ta ≤ +40	-20 ≤ Ta ≤ +40
Operating Voltage (Vac):	220-240	220-240
Height (mm):	148	208
Length (mm):	182	183
Width (mm):	201	201
Weight (kg):	0.59	0.64

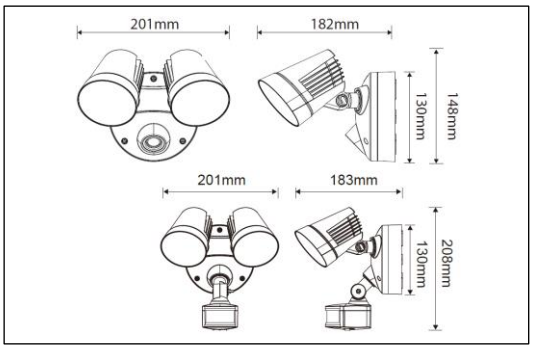

Cone Illuminance Diagram:

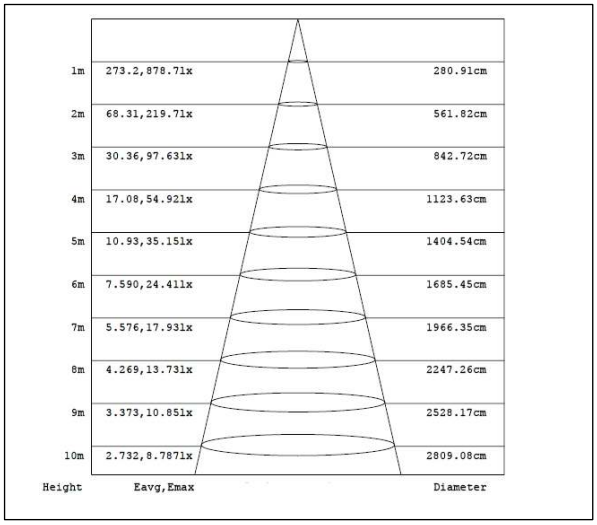

Diagram for RCH20CCT3-01 in 4,000K. Other diagrams available on request

Sensor Detection Range:

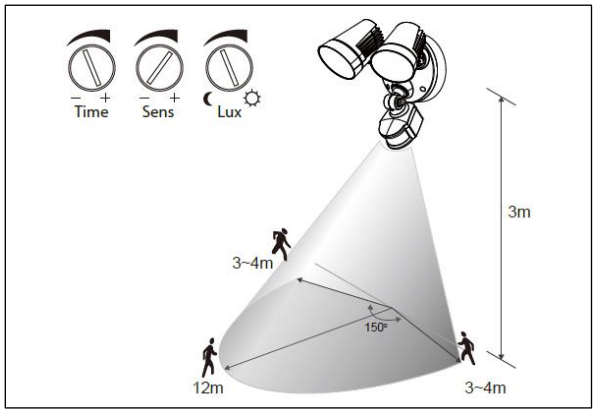

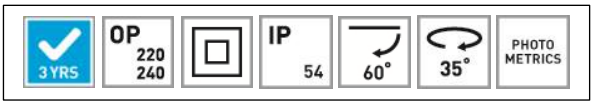

Standards & Approvals:

Complies with: SAA & RCM

PLEASE NOTE: INFORMATION IN THIS DOCUMENT MAY BE SUBJECT TO CHANGE WITHOUT PRIOR NOTICE