harmony™
home network systems

HPM brings harmony to your home

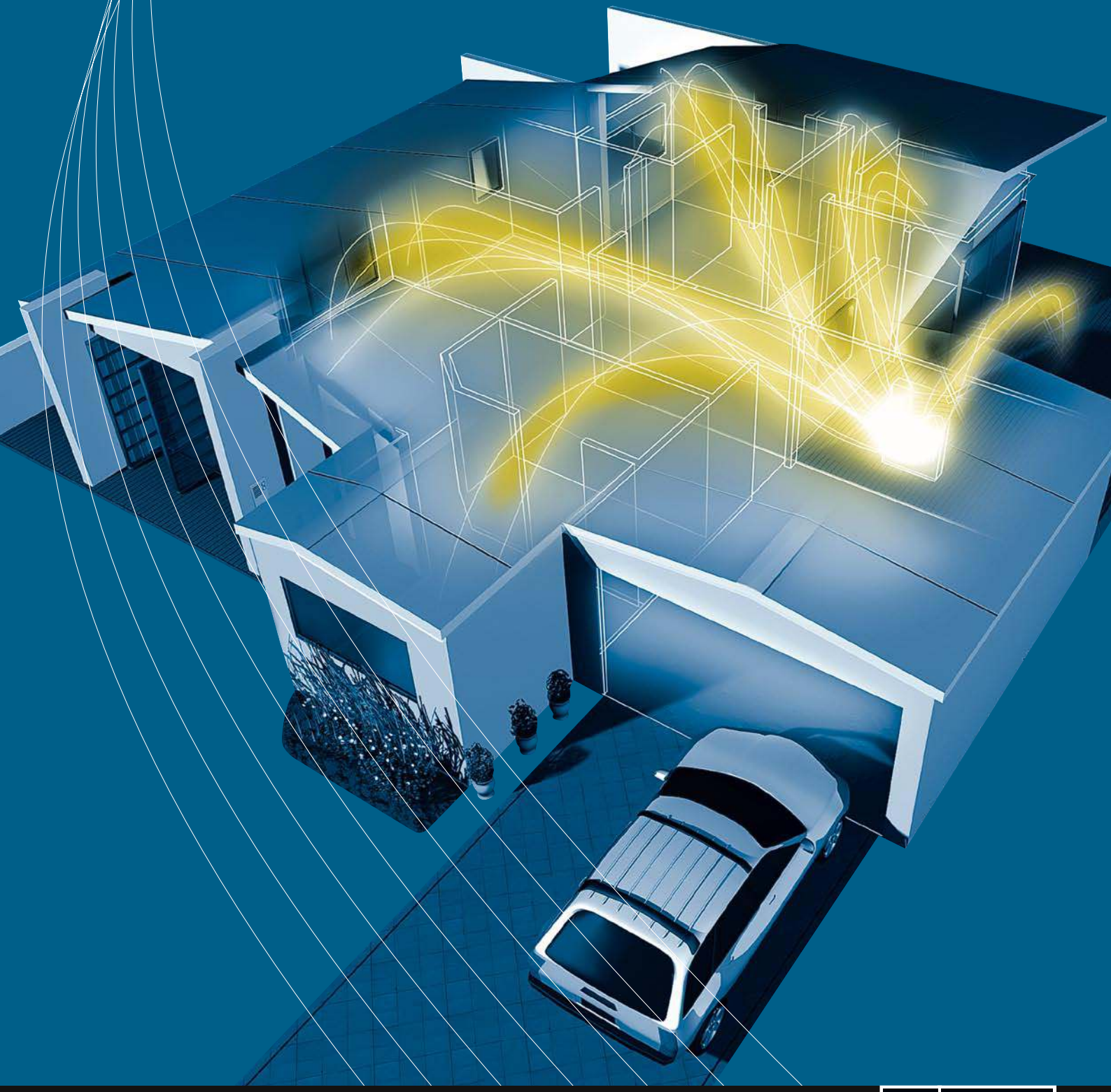

HPM

HPM

harmony™
home network systems

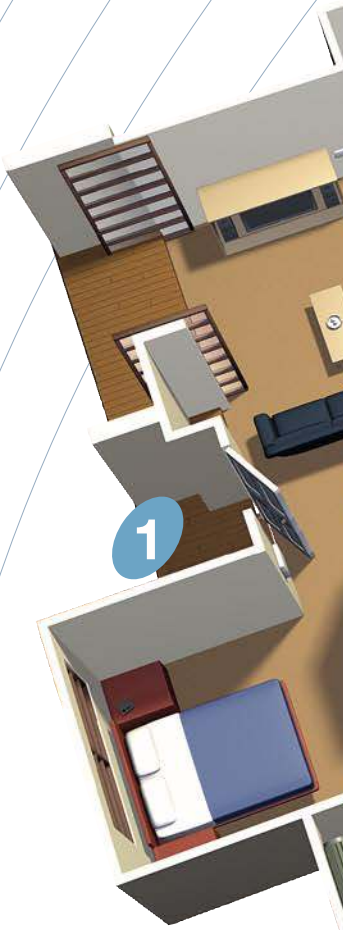

What is harmony™?

Introducing harmony™ by HPM, an intelligent home network system that conveniently integrates home technologies through a simple-to-use central hub.

With harmony™ you can network your computer systems, Pay TV, audio, DVD, video, telephone and security throughout your home, back to one location for easy access and management.

Access Pay TV, watch a DVD or see who is at the front door from any television in your home. Listen to music while tinkering in the garage or entertaining on the deck.

No longer restricted by the position of your equipment, harmony™ allows you to access your home technologies in numerous locations.

When is the best time to install harmony™?

The best time to install harmony™ is when you are building your home. When designing your home speak with your harmony™ supplier to help you plan a system best suited to your needs. You can begin with a basic package and add additional services. Unlike other systems, harmony™ is a complete package, including wall plates and installation accessories.

harmony™ must be installed by a qualified structured wiring specialist or a qualified electrician.

What does harmony™ look like?

Once installed, harmony™ is hidden, except for the discreet central hub and stylish Excel wall plates.

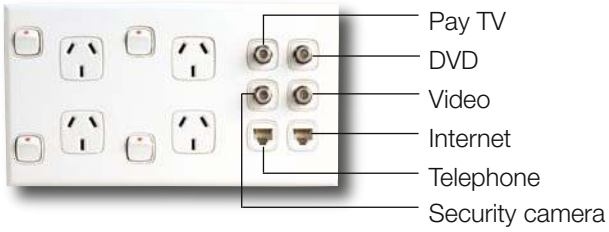

smartwired® HPM is part of the Smart Wired™ Consortium

Note: The systems outlined in the following pages are examples only. Larger systems are possible. Combinations of harmony™ products and output possibilities vary according to homeowner requirements.

What can harmony™ do?

1 Security
Front door - See who is at the front door from any television in your home.

2 Multiple access
Ensuite - Listen to the news from your main TV and stereo system, via speakers in your bathroom when getting ready for work.

3 Audio entertainment
Garage - Listen to the game in stereo quality sound while doing odd jobs around your home. Control the volume with wall-mounted volume controllers.

4 Outdoor entertainment
Back deck - Enjoy listening to music while entertaining inside or out. You can use your existing remote controls to control your play list.

5 Internet access
Spare room - Download information from the internet from any room and print it on the main printer in the office. By networking your computers you will enjoy a larger working space to keep and share files.

6 Convenience
Bedroom - Watch a DVD from bed, even though the DVD player is in the lounge room.

7 Office
Office - Quickly change a phone point into a fax line, printer port, or infrared port for a remote control receiver.

8 Child monitor
Child's bedroom - Keep an eye on your children with the harmony™ security system cameras, (ideal for swimming pool areas).

9 Audiovisual home theatre
Lounge room - Watch Pay TV, DVD, or video simultaneously on multiple TVs, with maximum quality reception. Harmony™ connects all TVs to the main aerial and is compatible with Digital TV.

FOXTEL RECOGNISED

Audio

All audiovisual equipment is connected to the main amplifier, or tuner, and in turn connected to the harmony™ audio distribution system, via the stereo's auxillary output. This means you can listen to the radio, DVD, CD, video, Pay TV and free-to-air TV in additional locations away from the equipment's physical location. Output volume can be controlled in every location with wall-mounted volume controllers.

It is possible to have a larger system incorporating more facilities. For more information please contact your harmony™ supplier.

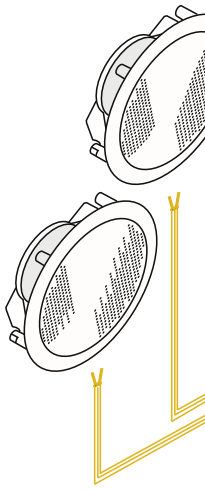

*Shielded audio cables recommended for audio inputs with long cable runs and noisy environments.

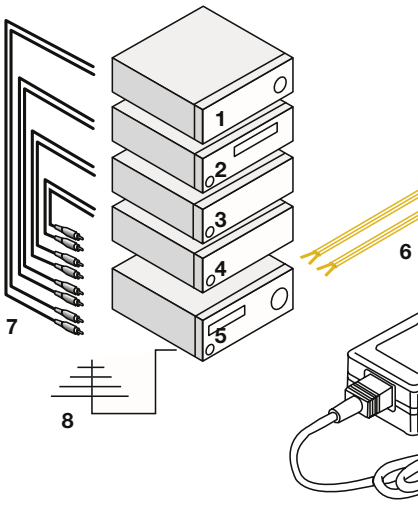

harmony™ audio component options

Audio module
Takes input from audio source and distributes to multiple speaker outlets
Cat. SWAM04

Volume control
Cat. SWVC02

Ceiling mount stereo speaker (pair)
30W RMS 8 Ω Circular 230mm diameter
Cat. SWSPK01

Ceiling mount mono speaker (single)
30W RMS 8 Ω Circular 230mm diameter
Cat. SWSPK02

Wall mount / ceiling mount stereo speaker (pair)
35W RMS 8 Ω Rectangular 304mmx223mm
Cat. SWSPK03

Outdoor speaker (pair)
30W RMS 8 Ω Bracket mounted in black or white
Cat. SWSPK04

Additional products required:
Figure 8 cable (min 0.7mm2 / 19 AWG), wall plates and connectors (please refer to HPM Trade Price List for the complete range of wall plates and connectors), RCA leads, banana plugs.

Key

1 DVD player
2 VHS player
3 Pay TV
4 Digital set top box
5 Audio amplifier with audio line level output & multiple audio inputs
6 Shielded audio cable*
7 RCA connectors
8 Antenna

Ceiling mount stereo speakers
SWSPK01

Volume control
SWVC02

Volume control
SWVC02

Wall mount / ceiling mount stereo speakers
SWSPK03

Audio module
SWAM04

Ceiling mount mono speaker
SWSPK02

Volume control
SWVC02

Volume control
SWVC02

Power supply
SWPS050

Outdoor speakers
SWSPK04

*Wiring is not limited to the sample shown, a typical representation only.

TV and security

DVD, VCR, security camera, Pay TV, and free to air TV signals can be distributed to up to six televisions via the harmony™ Video combiner & splitter, and up to 8 televisions via the harmony™ Advanced video combiner & splitter.

A video recorder connected to either system can record material from free-to-air TV, Pay TV, DVD, or security cameras.

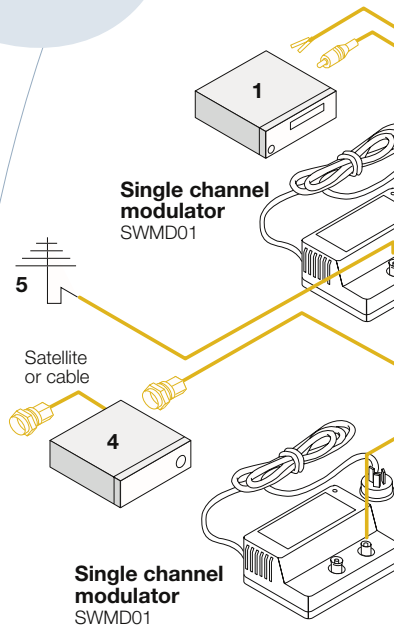

harmony™ TV and security component options

Advanced video combiner and splitter (4 inputs, 8 outputs)
Combines and splits video signals into TV outputs
Cat. SWAVCS01

Video amplifier
Amplifies video signals
Cat. SWVA01

Indoor / outdoor security camera
Ceiling mounted black and white camera
Cat. SWSC02

Single channel modulator
Converts AV signal to RF signal
Cat. SWMD01

Power supply 500mA 12VDC
Provides 12VDC power to various harmony™ components
Cat. SWPS005

Power supply inline 3A 12VDC
Provides 12VDC power to various harmony™ components
Cat. SWPS030

Power supply inline 5A 12VDC
Provides 12VDC power to various harmony™ components
Cat. SWPS050

Additional products required:
RG6 quadshield cable, wall plates and connectors (please refer to HPM Trade Price List for the complete range of wall plates and connectors), F to PAL connector converter, RCA leads, RCA dual socket connector.

Key

1 DVD player
2 VHS player
3 Digital set top box
4 Pay TV
5 Antenna
6 Conventional (CRT) television
7 Plasma screen television

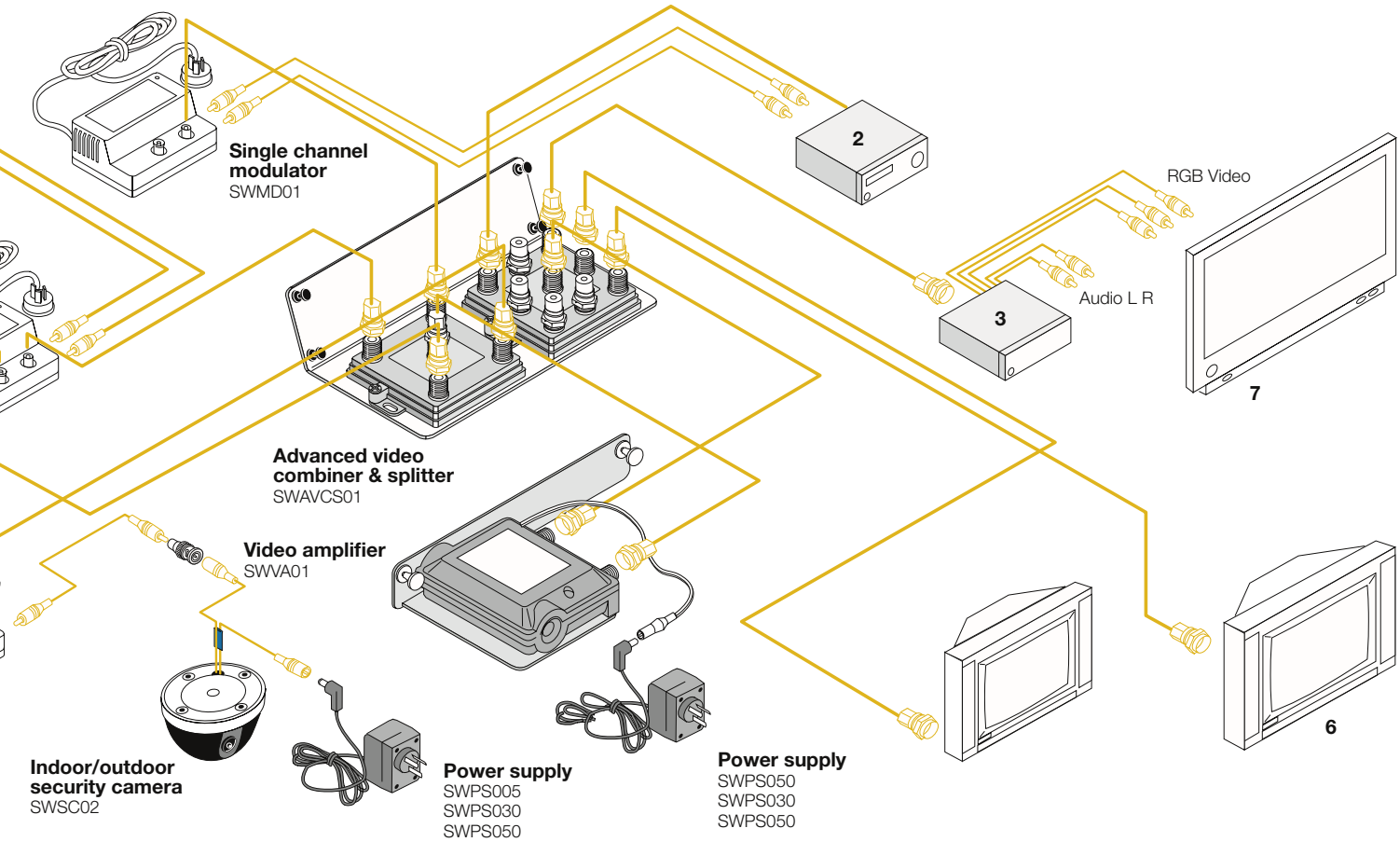

*Wiring is not limited to the sample shown, a typical representation only.

IR Control

You can have remote control to all of your audiovisual equipment in any room you choose with the harmony™ infrared (IR) distribution system. Locate the harmony™ IR emitter with your audio visual equipment, and the harmony™ IR receivers in the locations where you want remote control. Connect both to the harmony™ IR distributor.

The example illustrates an additional three locations where remote control of audiovisual equipment is possible. (Two where audio services can be accessed, including audio from Pay TV, free-to-air TV, DVD, and VCR and one where both audio and visual services can be accessed.)

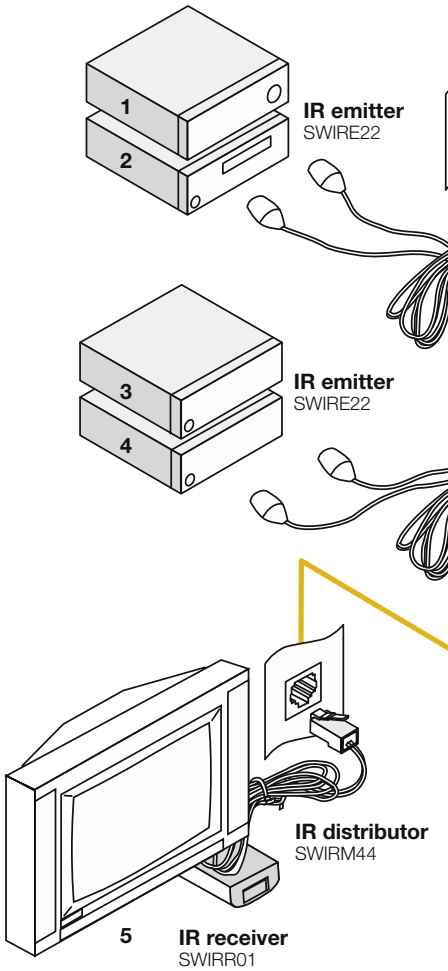

harmony™ IR Control component options

IR distributor
Receives IR signals from IR receivers and distributes to IR emitters
Cat. SWIRM44

IR receiver
Receives signals from remote controllers and sends them to the emitter
Cat. SWIRR02

IR emitter
Emits IR signals that control electronic appliances
Cat. SWIRE22

Power supply inline 3A 12VDC
Provides 12VDC power to various harmony™ components
Cat. SWPS030

Power supply inline 5A 12VDC
Provides 12VDC power to various harmony™ components
Cat. SWPS050

Additional products required:
Cat5E or better cable, wall plates and connectors (please refer to HPM Trade Price List for the complete range of wall plates and connectors).

Key

1 Tuner / amplifier
2 DVD player
3 VHS player
4 Pay TV
5 Television
6 Remote control

IR receiver
SWIRR01

Network patch panel
SWPP08

6

IR receiver
SWIRR01

Power supply
SWPS030
SWPS050

*Wiring is not limited to the sample shown, a typical representation only.

Data, Phone and Fax

With a harmony™ Network patch panel and Network data hub, you can network your computer equipment just like you might find in an office environment. The computers can share data and peripherals such as printers, and modems.

The harmony™ Advanced telephone distributor can be used to distribute up to 4 telephone lines to a maximum of 6 handsets. You can distribute a single line to multiple handsets, or multiple lines to handsets as desired. It is possible to have more than 4 inputs and 6 outputs with the purchase of additional modules.

Fax machines can operate on their own line, or they can be connected to telephone lines as illustrated in the diagram. The harmony™ system includes a line-grabbing facility for security systems.

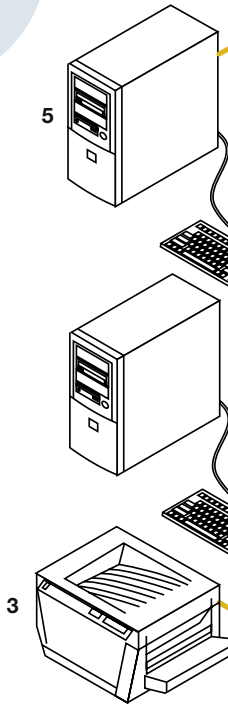

harmony™ data, phone and fax component options

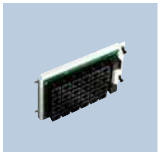

Advanced telephone distributor
Accepts up to 4 incoming telephone lines and distributes each line to up to 6 locations
Cat. SWATD01

Network data hub
Connects computers, printers and other computer peripherals
Cat. SWDH05

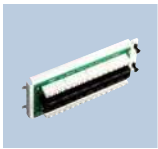

Network patch panel
Allows easy re-configuration of phone, fax, IR and data points to suit changing needs
Cat. SWPP08

Cat5E patch lead pack
Cat5E 300mm long patch leads (pack of 4)
Cat. SWLD003

Additional products required:
Cat5E or better cable, telephone cables, wall plates and connectors (please refer to the HPM Trade Price List for a complete list of wall plates and connectors).

Key

1 Security system
2 Fax
3 Printer with network card
4 External lines (phone, fax and internet incoming lines)
5 Data modem

Advanced telephone distributor
SWATD01

4

1

Line 1

Line 1

Line 2

Line 2

2

Line 3

Network patch panel
SWPP08

Network patch panel
SWPP08

Line 1

Line 1

Network data hub
SWDH05

Power supply included

*Wiring is not limited to the sample shown, a typical representation only.

Design your own system

You can start with one of the following packages and add any additional modules you would like. Or design your own system entirely by selecting all the modules relevant to your needs.

Start up communication package

- **Essential phone distributor**
- **Video amplifier**
- **Video combiner & splitter**
- **Small enclosure (surface mount)**

Combines 2 video signals (eg. DVD and TV, or VCR and TV).

Distributes these signals to up to 6 locations.

Accepts 4 incoming telephone lines (i.e. 4 different telephone numbers).

Each telephone line can be distributed to 6 rooms, giving you a phone, fax or internet connection in 6 rooms.

Entertainment package

- **Advanced phone distributor**
- **Video amplifier**
- **Advanced video combiner & splitter**
- **Network patch panel (optional upgrades)**
- **Medium enclosure (surface or flush mount)**

Combines 4 video signals (eg. DVD, TV, VCR and Pay TV).

Distributes these signals to up to 8 locations.

Accepts 4 incoming telephone lines (i.e. 4 different telephone numbers).

Each telephone line can be distributed to 6 rooms, giving you a phone, fax or internet connection in 6 rooms.

Includes 1 patch panel enabling easy configuration for the user of telephone, fax, and internet connections (and also the IR system if this module is purchased).

Patching between IR and Data is also possible with the addition of an IR engine or Data hub.

Total control package

- **Advanced phone distributor**
- **Video amplifier**
- **Advanced video combiner & splitter**
- **Two Network patch panels (optional upgrades)**
- **Large enclosure (surface or flush mount)**

Combines 4 video signals (eg. DVD, TV, VCR and Pay TV).

Distributes these signals to up to 8 locations.

Accepts 4 incoming telephone lines (i.e. 4 different telephone numbers).

Each telephone line can be distributed to 6 rooms, giving you a phone, fax or internet connection in 6 rooms.

Includes 2 patch panels enabling easy configuration for the user of telephone, fax, and internet connections. (Patching between IR and Data is also possible with the addition of an IR engine or Data hub).

Large sized surface or flush mount enclosure enabling future expansion of the system.

HPM

harmony™
home network systems

Full component listing

Cat Number	Description
Packaged kits	
SWMK01	Start up communication package
SWMK02	Entertainment package
SWMK03	Total control package
Power supplies and leads	
SWPS005	Power supply 500mA 12VDC
SWPS030	Power supply inline 3A 12VDC
SWPS050	Power supply inline 5A 12VDC
SWPL02	Power split lead 2 way
SWLD003	Cat5E Patch lead pack (Qty 4)
SWLT003	Telephone lead pack (Qty 4)
Upgrade modules	
SWPP08	Network patch panel, 8 port
SWDH05	Network data hub, 5 port, 10/100 Mbps, 1 uplink port for expansion
SWAM04	Audio distributor, 1 input, up to 4 outputs, 40W output (5W per channel)
SWIRE22	Infrared (IR) emitter, connects with RJ45 plug
SWIRM44	Infrared (IR) distributor, supports up to 4 x IR control sets
SWIRR02	Infrared (IR) receiver, connects with RJ45 plug
Debundled packages (Standard modules and enclosures)	
SWME01	Metal enclosure only / small
SWME02	Metal enslosure only / medium
SWME03	Metal enclosure only / large
SWETD01	Essential telephone distributor, 4 line input, up to 6 telephone line outlets per input line, with IDC connectors
SWATD01	Advanced telephone distributor, 4 line input, up to 6 telephone line outlets per input line, with RJ45 connectors
SWVCS01	Video combiner & splitter, 2 x RF inputs, 6 x RF outputs
SWAVCS01	Advanced video combiner & splitter, 4 x RF inputs, 8 x RF outputs
SWVA01	Video amplifier, max gain VHF 20-26dB, UHF 34 dB
Speaker range	
SWSPK01	Ceiling mount stereo speaker, 30W RMS, 8 Ω, frequency response 60Hz - 20kHz - white
SWSPK02	Sum adding mono speaker, 30W RMS, 8 Ω, frequency response 60Hz - 20kHz - white
SWSPK03	Wall / ceiling mount stereo speaker, 35W RMS, 8 Ω, frequency response 50Hz - 20kHz - white
SWSPK04	Outdoor speaker, 30W RMS, 8 Ω, frequency response 82Hz - 20kHz - white
SWSPK04BL	Outdoor speaker, 30W RMS, 8 Ω, frequency response 82Hz - 20kHz - black
SWVC02	Volume controller 60W RMS - white
SWVC02BL	Volume controller 60W RMS - black
SWMD01	Single channel modulator, channels 21 to 69, RF output 470 to 860 MHz adjustable
SWST04	Speaker terminal 4 way, dual stereo
SWCBL01	Shielded audio cable - 100m roll

Security cameras	
SWSC01	Indoor security camera, light level sensitive to 0.5 lux, output resolution 420 lines
SWSC02	Indoor / outdoor security camera, light level sensitive to 0.3 lux, output resolution 420 lines

Combination Excel plates	
XLV048/2W	Excel combination plate
XL222PA/2T	Excel combination plate
XL222/2T	Excel combination plate
XLV222/2W	Excel combination plate
XL422PA/3T	Excel combination plate
XLV6/3W	Excel combination plate
XLV424/3W	Excel combination plate

Installation accessories	
712S2	Cavity wall Gyprock bracket segregated 2 gang
712S3	Cavity wall Gyprock bracket segregated 3 gang
953S2	Render bracket segregated 2 gang
953S3	Render bracket segregated 3 gang
425S2	Wall box segregated 2 gang
425S3	Wall box segregated 3 gang
143S2	Stud bracket segregated 2 gang
143S3	Stud bracket segregated 3 gang

Some of the wall plates and connectors available from HPM are listed below. For a complete listing please see the HPM Trade Price List.	
XL770F	Excel plate F connector for cable
700F	Standard plate F connector
RJ8A5E/1	RJ45 socket, 8P8C Cat5E
RJT1	Termination tool
XL770/1RJ2	8 contact socket RJ8A5
1313A/FF3	Signal attenuator, reduces the signal strength by 3dB
1313A/FF6	Signal attenuator, reduces the signal strength by 6dB
1313A/FF10	Signal attenuator reduces the signal strength by 10dB
1313A/FF12	Signal attenuator, reduces the signal strength by 12dB
1313A/MF3	Signal attenuator, reduces the signal strength by 3dB
1313A/MF6	Signal attenuator, reduces the signal strength by 6dB
1313A/MF10	Signal attenuator, reduces the signal strength by 10dB
1313A/MF12	Signal attenuator, reduces the signal strength by 12dB
1310FS	F connector female to PAL socket in 800 insert
1313T	Line terminator, used for terminating end points on RF systems
D1214/1	1M TV / video fly lead
D1209/1.5	1.5M antenna lead, 75 Ω
D1209/2.5	2.5M antenna lead, 75 Ω
R1209/5	5M antenna lead, 75 Ω
R1209/10	10M antenna lead , 75 Ω
800RCAB/G	RCA jack, black with adaptor
800RCAR/G	RCA jack, red with adaptor
800RCAY/G	RCA jack, yellow with adaptor

harmony™
home network systems

HPM brings harmony to your home

The harmony™ home network system is designed and engineered in Australia to the highest standards by HPM. harmony™ was developed to ensure you are always ready to 'plug-in' to new technologies.

HPM is a 100% Australian owned company, a market leader in the electrical industry providing innovative solutions for residential, commercial and industrial projects. With over 9,000 products, ranging from switches and powerpoints to sophisticated home and building automation systems, HPM can plug you into the latest technologies to ensure your life is easier, safer and more enjoyable.

When you choose HPM products, you are backed by over 80 years experience from one of Australasia's largest manufacturers and suppliers in the electrical industry.

HPM is a quality endorsed company with ISO 9002 accreditation from Standards Australia and laboratories approved by NATA.

050505/G/B

HPM Industries Pty Ltd Australia ABN 31 000 102 661
Tel: 1300 369 777 Web: www.hpm.com.au
HPM NZ Ltd New Zealand Tel: 0800 476 009 Web: www.hpm.co.nz

HPM