Weatherproof LED Exit Sign

FEATURES

- Electronics designed to lengthen the life of the battery, minimizing maintenance costs
- Environmentally friendly battery
- Two sizes: 24m and 32m viewing distance
- High resistance polycarbonate ABS clear cover
- Removable gear tray for ease of maintenance and installation
- Large terminal block for ease of connection
- Low cost maintenance
- T-sense™ temperature sensing technology for LIION battery
- Designed and manufactured in Australia
- 5 year warranty

APPLICATIONS

- Exterior: large and small spaces

TECHNICAL INFORMATION

- Operating mode: Maintained
- Supply voltage: 240V a.c. +/- 6% 50Hz
- Power consumption: 5.4W
- Battery: Li-ion 6.4V 1.5Ah
- IP rating: IP65
- IK rating: IK08
- Body construction: Polycarbonate
- Operating temperature: 10°C to 40°C
- Compliance: AS/NZS 2293 AS/NZS 60598

24m

32m

DIMENSIONS

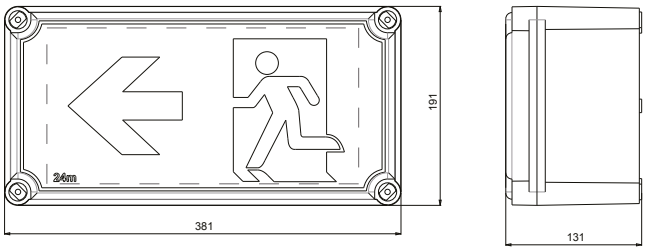

24m Exit

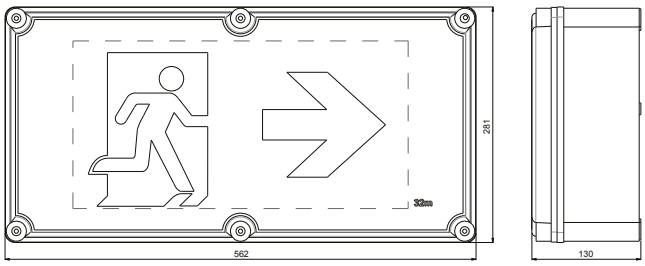

32m Exit

Cat No	Description
24m – SPU	
F9937LW/S/LI	WP LED Exit RM
F9937LW/L/LI	WP LED Exit RML
F9937LW/R/LI	WP LED Exit RMR
24m – FMX	
FX9937LW/S/LI	FMX WP LED Exit RM
FX9937LW/L/LI	FMX WP LED Exit RML
FX9937LW/R/LI	FMX WP LED Exit RMR
32m – SPU	
F9939LW/S/LI	WP LED Exit RM
F9939LW/L/LI	WP LED Exit RML
F9939LW/R/LI	WP LED Exit RMR
32m – FMX	
FX9939LW/S/LI	FMX WP LED Exit RM
FX9939LW/L/LI	FMX WP LED Exit RML
FX9939LW/R/LI	FMX WP LED Exit RMR

RM= Running Man straight, RML= Running Man left, RMR= Running Man right

Accessories	
F9937/WBKT	Wall bracket for 24m
F9937/CBKT	Ceiling bracket for 24m
F9937/SBKT	Side bracket for 24m

Weatherproof LED Exit Sign

Rear mounting bracket

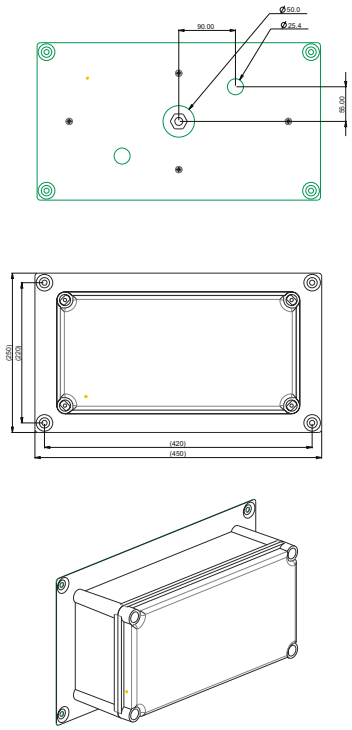

Side mounting bracket

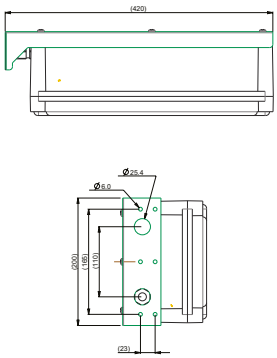

Ceiling mounting bracket

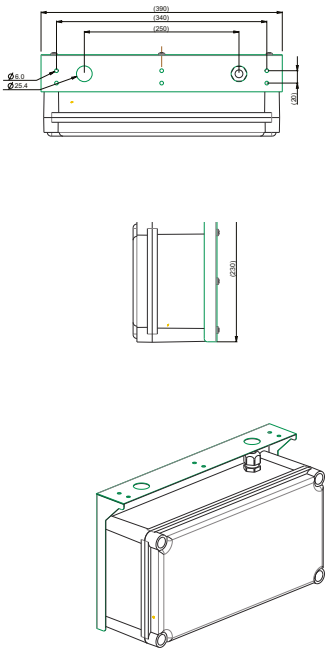

Classification	Maximum spacing between luminaires 0.2 lux Mounting Height (Metres)			
Metres / Classification	2.7	3	3.3	3.6
E 2.5	5.8	5.8	6.0	5.8
E 2	5.2	5.4	5.2	5.0

Classification	Maximum spacing between luminaires 1 lux Mounting Height (Metres)			
Metres / Classification	2.4	2.7	3.0	3.3
E 2.5	N/A	N/A	N/A	N/A
E 2	N/A	N/A	N/A	N/A

More info available at:
www.famco.com.au

FAMCO LIGHTING PTY LTD
T: (03) 9935 7300 **F**: (03) 9935 7301 **E**: info@famco.com.au **W**: www.famco.com.au

© 2016 Famco Lighting Pty Ltd All rights reserved. E&OE. Subject to change without notice, to allow progress in design. This document and the information it contains is the property and copyright of Famco Lighting Pty Ltd and must not be used, copied, transmitted or reproduced without our written permission.

FAM2305_C
01_2018