LD Grille

LD Grille

Application
- For supply and exhaust ventilation.
- Wall or ceiling mount.
- Internal or external mounting.

Design
- The casing and the impeller are made of high durable ABS plastic, UV resistant.
- Two piece structure.

Aluminium LD Grille

ESC Code	B	H	L	L1	Flange (OD)
VLD100	149	149	58	30	100
VLD125	206	206	63	34	125
VLD150	206	206	70	36	150
VLDA100	149	149	58	30	100
VLDA125	206	206	63	34	125
VLDA150	206	206	70	36	150

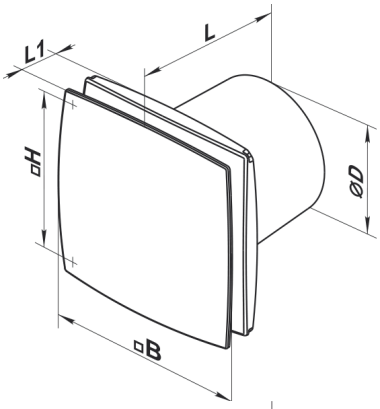

Modern Grille

Modern Grille

Application
- For supply and exhaust ventilation.
- Wall or ceiling mount.
- Internal mounting.

Design
- Changeable face plate

Accessory Part No: V150MDPLATE

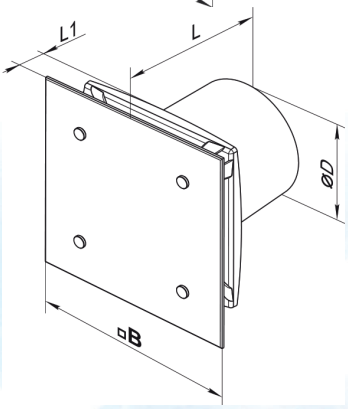

ESC Code	oD	B	L	L1
VMD150G	150	226	157	39

Disc Valve Diffuser

Disc Valve Diffuser

Application
- For supply and exhaust ventilation.
- Used to arrange correct air circulation.

Design
- Made of quality durable plastic.
- Special aerodynamic disk valve design ensures uniform air distribution.
- Easy installation with fixing lugs and a mounting flange with a lock ring.

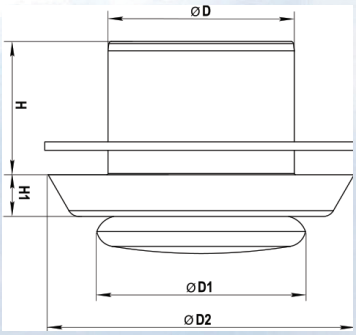

ESC Code	OD1	H	L	H1	OD2	Flange (OD)
VDV100	141	90	-	28	148	100
VDV125	166	110	-	20	166	125
VDV150	188	128	-	20	200	150

All grilles and cowls are suitable for domestic, commercial and industrial installations. Fitted with a round connecting spigot (100, 125 or 150mm) for mounting with Flexible Aluminium, Rigid Aluminium and PVC Duct.