VENTS VIF Series

ESC CODE:

- **VIF100** - 100mm
- **VIF125** - 125mm

Axial inline fans for exhaust ventilation with the capacity up to 365 m³hr.
This fan is also available in two packs, refer to page 29 and page 31.

Applications

- Continuous or periodic exhaust ventilation of bathrooms, showers, kitchens and other utility spaces.
- Exhaust or supply ventilation depending on the fan mounting type in the system.
- Designed for PVC ducting systems of flexible ducts.

ESC CODE:

- **VBIF150** - 150mm

IPX4

- Low to medium air flow motion for short distances at low air resistance.
- Compatible with 100 and 125 air ducts. Vents fans covered with 5 year warranty.

Design

- The casing and the impeller are made of high quality durable ABS plastic, UV resistant.
- The intellectual impeller design makes the fan efficiency high and the service life long.
- Protection rating IP34.

Motor

- Reliable and low-watt electric motor.
- Designed for continuous operation and requires no maintenance.
- Equipped with overheating protection.

Modifications and Options

VKO1k - Fan with a fixing bracket for flat surface mounting.
VKO1 L - The motor is equipped with ball bearings for long service life (appr. 40 thousand hours) and fan mounting at any angle. The bearings are maintenance-free and contain enough grease for the entire operating period.
VKO1 Turbo - High-powered motor.

Control Manual

- The fan is controlled by a room light switch. It is not included in the delivery package.
- Speed control is possible through a thyristor speed controller. Several fans may be connected to the same regulator unit.

Mounting Features

- The fan is mounted into a matching duct size. Fastening with clamps in case of flexible duct connection.
- The mounting bracket enables fan installation on both horizontal and vertical flat surfaces.
- Two fans can be installed in series for higher performance.

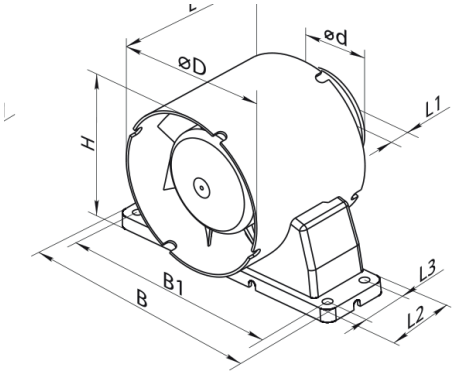

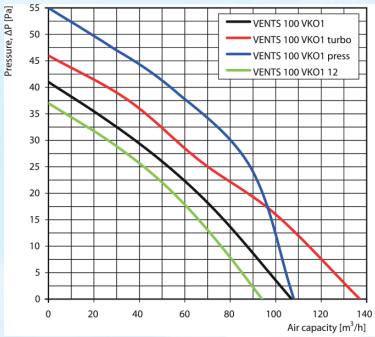

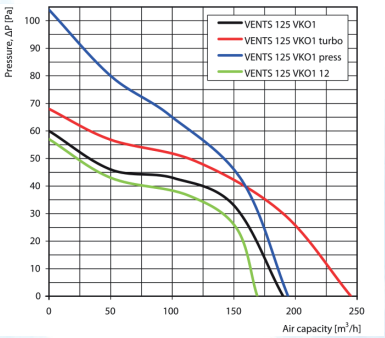

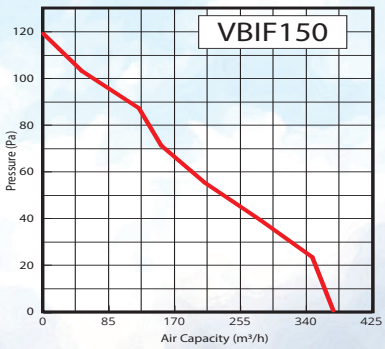

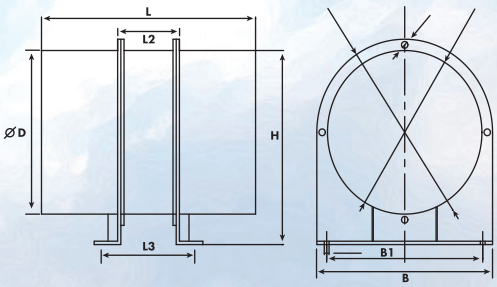

ESC Code	oD	oD1	B	B1	H	L	L1	L2	L3
VIF100	100	59	160	144	110	85	28	45	29
VIF125	125	59	185	169	125	90	28	45	29
VBIF150	150		200	184	162	100		45	29

ESC Code	Voltage [V] at 50Hz	Power Consumption [W]	Current [A]	R.P.M	Maximum Air Capacity [m3/h]	Sound Pressure Level at 3m [dB(A)]	Weight [kg]
VIF100	220-240	14	0.085	2300	107	36	0.41
VIF125	220-240	16	0.1	2400	190	38	0.43
VBIF150	220-240	36	0.17		365	42	0.58