VENTS LD Series

ESC CODE:

- **V100LDL** - White 100mm 240V
- **V125LDL** - White 125mm 240V
- **V150LDLT** - White 150mm 240V
- **V100LDLV** - White 100mm Low Voltage
- **V125LDLV** - White 125mm Low Voltage
- **V150LDLV** - White 150mm Low Voltage

Axial decorative fans for exhaust ventilation with the capacity up to 310 m^3hr. Vents fans covered with 5 year warranty.

Design

- Modern design and aesthetic look.
- The casing and the impeller are made of high quality durable ABS plastic, UV resistant.
- Various decorative plates for the front panel of the natural aluminium.
- The intellectual impeller design makes the fan efficiency high and the service life long.
- Protection rating IP34.

Motor

- Reliable and low-watt electric motor.
- Designed for continuous operation and requires no maintenance.
- Equipped with overheating protection.

LD L - The motor is equipped with ball bearings for long service life (appr. 40 thousand hours) and fan mounting at any angle. The bearings are maintenance-free and contain enough grease for the entire operating period.

Turbo - High-powered motor.

LDLV - Modification with low-voltage motor. 12V AC power supply.

Control Manual

- The fan is controlled by a room light switch. It is not included in the delivery package.
- Speed control is possible through a thyristor speed controller. Several fans may be connected to the same regulator unit.

Mounting Features

- The fan is mounted directly into the ventilation shaft.
- Flexible duct application is recommended in case of remote location of the ventilation shaft. The air duct is connected to the fan exhaust flange through a clamp.
- Fixed to wall by self-tapping screws.
- Suitable for ceiling mounting.
- **For 12V low-voltage motor fan connection to 220V/50Hz power mains use the step-down wire-wound transformer TRW50.**

IPX4

ESC CODE:

- **V150LDLTB** - 150mm

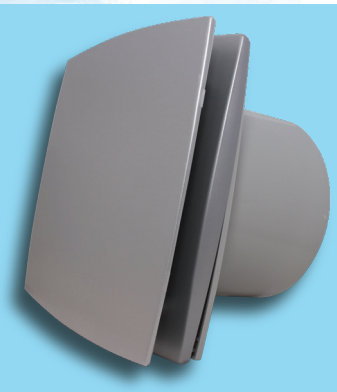

ESC CODE:

- **V100LDLA** - Aluminium 100mm
- **V125LDLA** - Aluminium 125mm
- **V150LDLTA** - Aluminium 150mm
- **V150LDALV** - Aluminium 150mm Low Voltage

ESC CODE:

- **V100LDFT** - Fresh Time 100mm

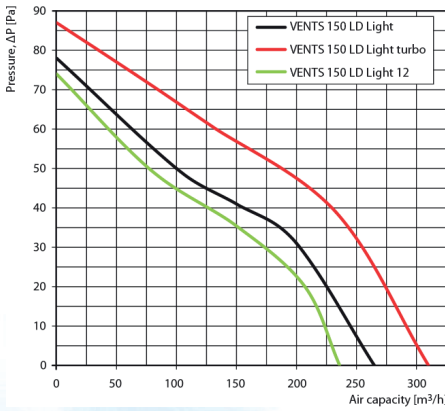

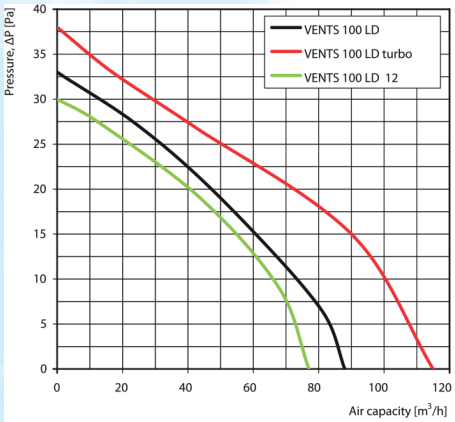

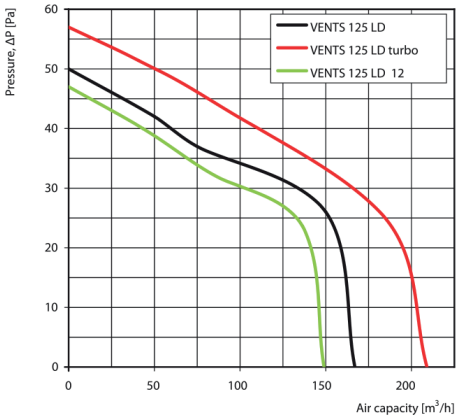

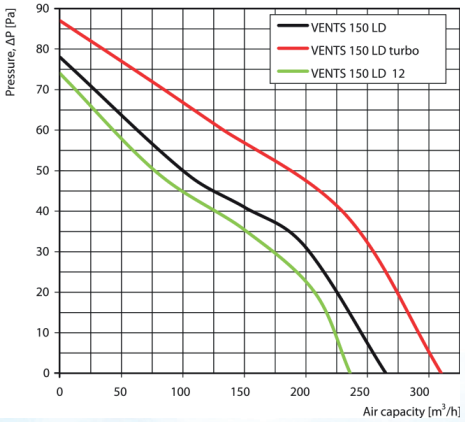

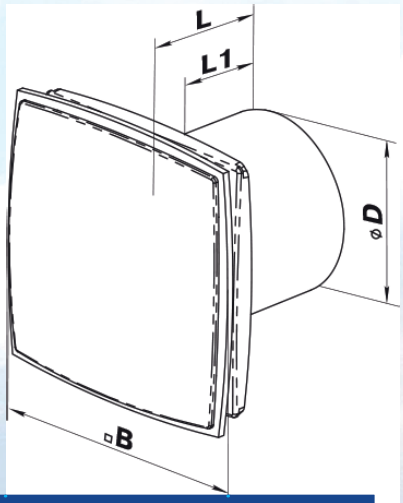

ESC Code	oD	B	H	L	L1
V100LDL	100	152	152	126	30
V125LDL	125	177	177	135	34
V150LDLT	150	206	206	154	36
V100LDLA	100	152	152	126	30
V125LDLA	125	177	177	135	34
V150LDLTA	150	206	206	154	36
V100LDLV	100	152	152	126	30
V125LDLV	125	177	177	135	34
V150LDLV	150	206	206	154	36
V150LDALV	150	206	206	154	36

ESC Code	Voltage [V] at 50Hz	Power Consumption [W]	Current [A]	R.P.M	Maximum Air Capacity [m3/h]	Sound Pressure Level at 3m [dB(A)]	Weight [kg]
V100LDL	220-240	14	0.085	2300	88	33	0.6
V125LDL	220-240	16	0.1	2400	167	34	0.74
V150LDLTA	220-240	30	0.13	2400	310	39	1.1
V100LDLA	220-240	14	0.085	2300	88	33	0.6
V125LDLA	220-240	16	0.1	2400	167	34	0.74
V150LDLTA	220-240	30	0.13	2400	310	39	1.1
V100LDLV	12	16	1.5	2200	93	32	0.6
V125LDLV	12	24	1.7	2300	175	33	0.73
V150LDLV	12	24	2	2300	236	36	0.92
V150LDALV	12	24	2	2300	236	36	0.92