VENTS S Series

ESC CODE:

- **V100SL** - 100mm
- **V125SL** - 125mm
- **V150SL** - 150mm
- **V150SLV** - 150mm

Axial fans for exhaust ventilation with the capacity up to 292 m³hr.
This fan is also available in a pack, refer to page 23.

Applications

- Continuous or periodic exhaust ventilation of bathrooms, showers, kitchens and other utility spaces.
- Ventilation shaft mounting or duct connection.

- Low to medium air flow motion for short distances at low air resistance.
- Compatible with 100, 125 and 150mm air ducts.

Vents fans covered with 5 year warranty.

- Modern design and aesthetic look.
- The casing and the impeller are made of high quality durable ABS plastic, UV resistant.
- The intellectual impeller design makes the fan efficiency high and the service life long.
- Ultra thin front panel.
- Insect screen.
- Protection rating IP 34.

Motor

- Reliable and low-watt electric motor.
- Designed for continuous operation and requires no maintenance.
- Equipped with overheating protection.

Modifications and Options

S1 - Shortened flange model.

S L - The motor is equipped with ball bearings for long service life (appr. 40 thousand hours) and fan mounting at any angle. The bearings are maintenance-free and contain enough grease for the entire operating period.

S Turbo - High-powered motor.

SLV - Modification with low-voltage motor. 12V AC power supply.

Control Manual

- The fan is controlled by a room light switch. It is not included in the delivery package.
- Speed control is possible through a thyristor speed controller. Several fans may be connected to the same regulator unit.

Mounting Features

- The fan is mounted directly into the ventilation shaft.
- Flexible duct application is recommended in case of remote location of the ventilation shaft. The air duct is connected to the fan exhaust flange through a clamp.
- Fixed to wall by self-tapping screws.
- Suitable for ceiling mounting.
- **For 12V low-voltage motor fan connection to 220V/50Hz power mains use the step-down wire-wound transformer. TRW50**

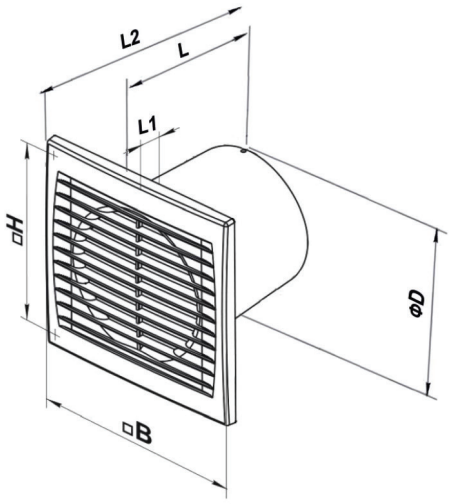

IPX4

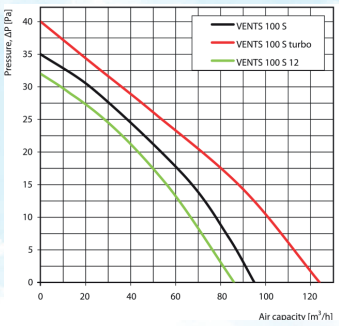

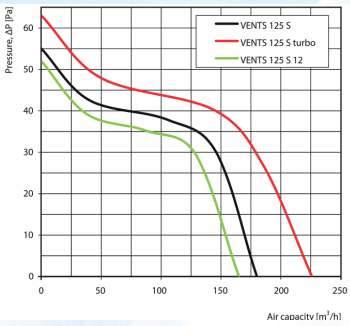

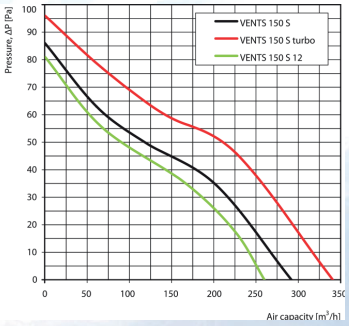

ESC Code	oD	B	H	L	L1
V100SL	100	150	150	108	12
V125SL	125	176	176	114	13
V150SL	150	205	205	132	14
V150SLV	150	205	205	132	14

ESC Code	Voltage [V] at 50Hz	Power Consumption [W]	Current [A]	R.P.M	Maximum Air Capacity [m3/h]	Sound Pressure Level at 3m [dB(A)]	Weight [kg]
V100SL	220-240	14	0.085	2300	95	34	0.59
V125SL	220-240	16	0.1	2400	180	35	0.75
V150SL	220-240	24	0.13	2400	292	38	0.93
V150SLV	12	24	2	2300	260	37	0.89